AMERICAN MADE

MFP® SEALS

Since 1977

AMERICAN OWNED

Sealing In Success™

See us inside.

ENGINEERING GUIDE

VOL. 4

www.mfpseals.com

All stated data results from random tests taken from ongoing production. All data was established based on standard test-products according to ISO, DIN and ASTM standards, and basically can not be carried over to the completed seal.

Our applied technical advice, either oral, written or through tests is given according to our best knowledge. However, this information is to be considered as non-obligatory instruction, also in terms of any protective rights of a third party, and does not exempt you from testing our product in reference to its suitability for the intended process and purpose. Utilization, application and processing of the products occur entirely outside of our control and are therefore exclusively your responsibility. However, should a case of liability come into question, it will be limited to all damages in the value of the product which we delivered and you used. By all means, we do warrant the impeccable quality of our products in accordance with our general sales and delivery conditions.

Descriptions, specifications, compounds and products are subject to change without notice. Errors and omissions are subject to correction.

	Page
About MFP Seals: Building MFP Seals For You	1
MFP Seals - Products and Services	2 - 5
Engineering Guidelines: Design, Surface Finish	6 - 9
Seal Installation Guidelines: Rod & Piston	10 - 11
ISO Tolerance Chart (Inch & Metric)	12 - 13
Seal Storage Guidelines	14
Polymer Shelf Life	15
Seal Failure Examples	16 - 17
Custom Machined Seals	18 - 19
Seal Compounds	20 - 37
Quick O-Ring Gland Design - Inch Standard	40
Inch O-Ring AS568D: Sizes and Compounds	41 - 46
Quick Metric O-Ring Gland Design	275 - 277
Metric O-Ring Sizes: BS4518	278 - 279
Metric O-Ring Sizes: GB/T 3452.1	280 - 283
Metric O-Ring Sizes: J.I.S. B2401	284 - 285
Metric O-Ring Sizes: Standard	286 - 292
Metric O-Ring Sizes: SMS 1586	293 -294
Metric Back-Up Rings - J.I.S. Size Chart	298
Promotional Media	386

Prefix						Page	
Inch	mm	Profile	C/S	Seal Name	Compounds*	Inch	mm
O-Rings							
OR	MOR			AS568D O-Ring	See Pages 45-46 for a list of compounds, specially formulated for O-Rings.	45	295
OR	–			PTFE O-Ring	T1000	46	–
OR	MOR			Encapsulated O-Ring	TES - FEP / Silicone TEV - FEP / Viton®	47	Ask MFP Seals for more info
SR	–			Square Cut Ring	N6001, N6017, V7100	51	–
XR	–			X-Ring	N6014	55	–

Surface Finish: ISO 4287 & Chamfer Information on pages 7-9.
For ISO tolerance charts, refer to pages 12-13.

Compound information available on pages 20-37.

Seal Profile Index

MFPSEALS
www.mfpseals.com

Prefix Inch	Prefix mm	Profile	C/S	Seal Name	Compounds*	Page Inch	Page mm
O-Rings							
GS	MGS	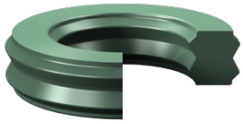		Gland Seal	U2150, U2151, U4150	59	Ask MFP Seals for more info
SFS	–			Split Flange Seal	Dual Durometer Urethane	Contact MFP Seals for more information	
ORC	MORC			Extruded O-Ring Cord Stock	N6001, N6003, V7525, V7550	61	297
SRC	–			Extruded Square Cut Cord Stock	N6001, N6003	62	–
XRC	–			Extruded X-Ring Cord Stock	N6001, N6003	63	–
Back-Up Rings for O-Rings							
BU	–			Contoured Back-Up Ring for O-Rings	N6003, V7165	64	–
BU	–			Split Back-Up Ring for O-Rings	T1000	72	–
BU	MBU			Solid Back-Up Ring for O-Rings	T1000	76	299
Back-Up Rings for U-Cups							
576	–			Solid Back-Up Ring for U-Cups	M1001, M1002	81	–
–	MBTU			Metric Solid Back-Up Ring for U-Cups	T5100	–	304

Compound information available on pages 20-37.

Surface Finish: ISO 4287 & Chamfer Information on pages 7-9.
For ISO tolerance charts, refer to pages 12-13.

Prefix Inch	Prefix mm	Profile	C/S	Seal Name	Compounds*	Page Inch	Page mm
Back-Up Rings for U-Cups							
BU	–			H2155 Back-Up Ring	H2155-BLK (Black) H2155 (Orange)	82	–
HBU	–			H2155 Block Vee Back-Up Ring	H2155	89	–
MB	–			Modular Bearing Square Section Back-Up Ring	U2166	90	–
TBU	–			Split PTFE Back-Up Ring for Block Vee U-Cups	T1000	91	–
Vee Packing							
VP	MVPS			Standard Vee Packing Set	Adapters: Glass Filled Nylon® Pressure Rings: Neoprene/Duck, Hytrel® Metric: POM / FAB / NBR / HARD FAB Contact MFP Seals for more Information.		
6225	–			Homogeneous Rubber Vee Ring	BN80 (BUNA N)	Contact MFP Seals for more information	
U-Cup Symmetrical							
6226	–			Symmetrical U-Cup	N6001, V7100	93	–
AU	–			Symmetrical U-Cup	NBR - Nitrile	Contact MFP Seals for more information	
–	MSUN			Symmetrical B-Lip U-Cup	NBR - Nitrile FKM	Contact MFP Seals for more information	
BV	–			Block Vee Symmetrical U-Cup	N6015, N6023 V7300	96	–

Seal Profile Index

MFPSEALS®
www.mfpseals.com

Prefix Inch	Prefix mm	Profile	C/S	Seal Name	Compounds*	Page Inch	Page mm
U-Cup Symmetrical							
EGS	–	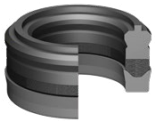		(2 PC.) Symmetrical Seal	NBR with Fabric & Rubber	Contact MFP Seals for more information	
HU	MSUC			HU Series Symmetrical U-Cup	U2145, U2150, U2151, U2162, U4150, H2155	99	315
HZ	–	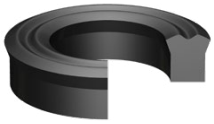		Symmetrical U-Cup	NBR - Nitrile	Contact MFP Seals for more information	
OP	MOP			O-PAC® Symmetrical U-Cup Loaded B-Lip	Seal: U2145, U2150, U2151, U2162, U4150, H2155, V7675, N6021, N6023, N6034 X-Ring Expander: N6001, V7100, V7155	106	Ask MFP Seals for more info
OP	MOP			O-PAC® Symmetrical U-Cup Standard Lip	Seal: U2145, U2150, U2151, U2162, U4150, H2155, V7675, N6021, N6023, N6034 X-Ring Expander: N6001, V7100, V7155	107	Ask MFP Seals for more info
PIC	–			Pressure Inverting Cap for B-Lip O-PAC®	H2155	Contact MFP Seals for more information	
UC	–			Fabric & Rubber Symmetrical U-Cup	FAB (Fabric & Rubber)	Contact MFP Seals for more information	
XP	MXP			X-PAC® Symmetrical U-Cup Loaded B-Lip	Seal: U2145, U2150, U2151, U2162, U4150 X-Ring Expander: N6014	108	317
XP	–			X-PAC® Symmetrical U-Cup Loaded Straight-Lip	Seal: U2145, U2150, U2151, U2162, U4150 X-Ring Expander: N6014	134	–
XPYS	–			Symmetrical (2 PC.) U-Cup	Seal: U2150, U2151, U2162, H2155 Y-Ring Expander: N6001, N6015, N6021, N6022, N6023	140	–

Compound information available on pages 20-37.

Surface Finish: ISO 4287 & Chamfer Information on pages 7-9.
For ISO tolerance charts, refer to pages 12-13.

Prefix Inch	Prefix mm	Profile	C/S	Seal Name	Compounds*	Page Inch	Page mm
U-Cup Asymmetrical Rod Seals							
DI	–			Asymmetrical Rod U-Cup	Nitrile	Contact MFP Seals for more information	
PRU	MPRU	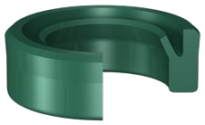		Asymmetrical Rod U-Cup	U2150	Contact MFP Seals for more information	
–	MK34	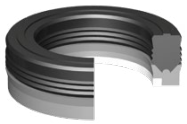		Asymmetrical Rod Seal with Back-Up Ring	Seal: NBR U-Cup: NBR/FAB or Thermoplastic Back-Up Ring: POM	Contact MFP Seals for more information	
KR	–			K-Style Asymmetrical Rod U-Cup	U2150, U2162	Contact MFP Seals for more information	
–	MMYA			Asymmetrical U-Cup	Nitrile	Contact MFP Seals for more information	
RFN	MMRFN	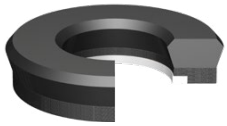		Rod Seal (2 PC.)	NBR / Fabric & Rubber	Contact MFP Seals for more information	
–	MRPU	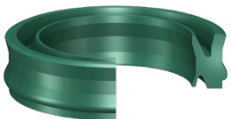		Asymmetrical Rod U-Cup	U2150, U2162	Contact MFP Seals for more information	
–	MRPUS			Asymmetrical Rod U-Cup (2 PC.)	NBR / H2155	Contact MFP Seals for more information	
RTL	MRTL			Asymmetrical Rod U-Cup	U2150, U2151, U4150, H2155	142	313
RU	MRU			Asymmetrical Rod U-Cup	U2150, U2151, U2162 U4150, H2155	147	311
SRS	–			Serrated Rod Seal U-Cup	U2150, U2151, U2162, U4150	148	–

Surface Finish: ISO 4287 & Chamfer Information on pages 7-9.
For ISO tolerance charts, refer to pages 12-13.

Compound information available on pages 20-37.

Prefix						Page	
Inch	mm	Profile	C/S	Seal Name	Compounds*	Inch	mm
U-Cup Asymmetrical Rod Seals							
XPAR	–			X-PAC® Loaded B-Lip Rod U-Cup, with Anti-Extrusion Ring	Seal: U2150, U2151, U4150, H2155 X-Ring Expander: N6014 AE Ring: M1000, M1001, M1016	149	–
XPR	–			X-PAC® Loaded B-Lip, Twin-Lip, Rod U-Cup	Seal: U2150, U2151, U4150, H2155 X-Ring Expander: N6014	150	–
XPRA	MXPRA			X-PAC® Loaded B-Lip Twin-Lip, Rod U-Cup, with Anti-Extrusion Ring	Seal: U2150, U2151, U4150, H2155 X-Ring Expander: N6014 AE Ring: M1000, M1001, M1016	151	328
U-Cup Asymmetrical Piston Seals							
DE	MDE			Asymmetrical Piston U-Cup	NBR (Nitrile)	Contact MFP Seals for more information	
GPW	MGPW	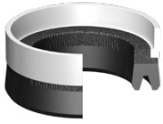		(2 PC.) Asymmetrical Piston U-Cup	Lip: NBR Base: Fabric & Rubber Bearing Ring: Acetal	Contact MFP Seals for more information	
H607	MH607	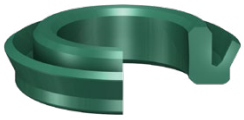		Piston U-Cup	U2150, U2151, U2162	Contact MFP Seals for more information	
KP	–			Asymmetrical Piston U-Cup	U2150, U2162	Contact MFP Seals for more information	
PTL	MPTL	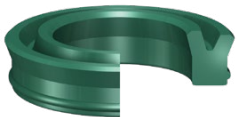		Piston U-Cup	U2150, U2151	Contact MFP Seals for more information	
–	MPDU			Piston Seal	NBR	Contact MFP Seals for more information	
–	MPSD			Piston Seal	NBR (Nitrile)	Contact MFP Seals for more information	

Compound information available on pages 20-37.

Surface Finish: ISO 4287 & Chamfer Information on pages 7-9.
For ISO tolerance charts, refer to pages 12-13.

Prefix Inch	Prefix mm	Profile	C/S	Seal Name	Compounds*	Page Inch	Page mm
U-Cup Asymmetrical Piston Seals							
PUC	MPUC			Asymmetrical Piston Seal U-Cup	U2145, U2150, U2151, U2162, U4150, H2155	153	308
PUE	MPUE			Asymmetrical Piston Seal U-Cup	Seal: U2150, U2151, U2162, U4150, H2155 AE Ring: M1001	156	Ask MFP Seals for more info
XPAP	–			X-PAC® Loaded B-Lip, Piston U-Cup, with Anti-Extrusion Ring	Seal: U2150, U2151, U4150, H2155 X-Ring Expander: N6014 AE Ring: M1000, M1001	Contact MFP Seals for more information	
Piston Cups							
PCD	–	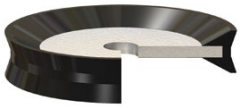		Double Acting Piston Cup	N8097 / Carbon Steel	157	–
–	MPCD			Double Acting Piston Cup	Nitrile / Steel	Contact MFP Seals for more information	
PCF	–			Fabric & Rubber Piston Cup	M1009	158	–
PCR	–	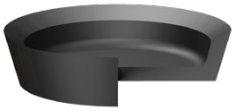		Rubber Piston Cup	NBR (Nitrile)	Contact MFP Seals for more information	
PCU	–	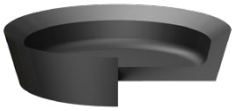		Rubber Piston Cup	U2162	Contact MFP Seals for more information	
Piston Rings							
PR	MPR			Piston Ring	Iron	Contact MFP Seals for more information	
–	MPAE			Anti-Extrusion Piston Ring	Nylon®	–	309

Seal Profile Index

MFPSEALS®
www.mfpseals.com

Prefix						Page	
Inch	mm	Profile	C/S	Seal Name	Compounds*	Inch	mm
Rod Assemblies							
CGLR	–	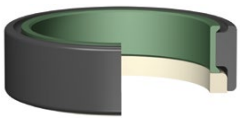		Capped Asymmetrical Rod Seal (3 PC.)	Energizer: N6020 Cap: T5100 Backup: M1000	160	–
CGTR	–	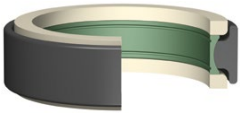		Capped GT Rod Seal (4 PC.)	Energizer: N6023 Cap: T5100 Backup: M1000	161	–
CRX	–			CRX Rod Seal® (2 PC.)	Rod Seal: U2145, U2150, U2151, U2162, U4150, H2155 O-Ring Expander: N6001, V7100	162	–
GTR	–			GT Ring Rod Seal (3 PC.)	Seal: N6001 Back-Up Rings: M1001	164	–
RS10	–			Rotary Rod Seal (2 PC.)	Rotary Rod Seal: T5100 O-Ring Expander: N6001	166	–
Piston Assemblies							
CGT	–			Capped GT Piston Seal (4 PC.)	Energizer: N6001, N6015, N6021, N6022, N6023 Cap: T5100 Backup: M1001	169	–
NCGT	MCGT	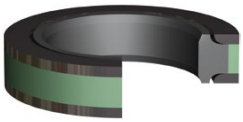		Narrow Capped GT Piston Seal (4 PC.)	Energizer: N6001, N6015, N6021, N6022, N6023 Cap: T5100 Backup: M1001	171	Ask MFP Seals for more info
CPX	–			CPX Piston Seal® (2 PC.)	Piston Seal: U2145, U2150, U2151, U2162, U4150, H2155 O-Ring Expander: N6001, V7100	172	–
DPWL	MDPWL	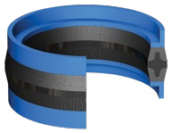		Piston Assembly (3 PC.)	Piston Seal: Nitrile Back-Up Rings: Fabric & Rubber Guide Rings: Polyacetal	Contact MFP Seals for more information	
GTP	–			GT Ring Piston Seal (3 PC.)	Seal: N6001 Back-Up Rings: M1001	173	–

Compound information available on pages 20-37.

Surface Finish: ISO 4287 & Chamfer Information on pages 7-9.
For ISO tolerance charts, refer to pages 12-13.

Prefix Inch	Prefix mm	Profile	C/S	Seal Name	Compounds*	Page Inch	Page mm
Piston Assemblies							
HPX	–			HPX Piston Seal™ (2 PC.) Standard and Wide Base	Piston Seal: U2150, H2155 Expander: NBR	176	–
PPR	–			Rectangular Piston Assembly (2 PC.)	Seal: H2155 Expander: N6001	Contact MFP Seals for more information	
PSA	MPSA	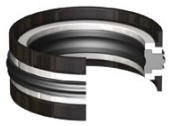		Piston Seal (5 PC.)	Piston Seal: NBR80 Back-Up Rings: Polyester Elastomer Guide Rings: POM	177	–
PSA-65	–			Piston Assembly (3 PC.)	Piston Seal: Nitrile Back-Up Rings: Polyacetal	Contact MFP Seals for more information	
–	MPSP			Piston Seal (2 PC.)	Piston Seal: U2151 O-Ring Expander: N6001	–	332
PSQ	MPSQ	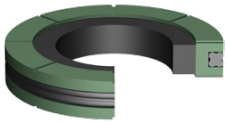		Piston Seal (3 PC.)	Piston Seal: T5100 Square-Ring: N6017 X-Ring Expander: N6014	178	–
PT	MPST			Piston Seal (2 PC.)	Piston Seal: T5100 O-Ring Expander: N6001	179	329
PUP	–			Piston Assembly (2 PC.) Standard and Wide Base	Piston Seal: U2161, U4160 Expander: N6001	180	–
PUR	–	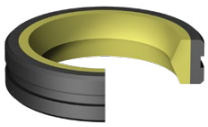		Piston Assembly (1 PC.)	Urethane	Contact MFP Seals for more information	
RS11	–			Rotary Piston Seal (2 PC.)	Rotary Piston Seal: T5100 O-Ring Expander: N6001	181	–

Prefix						Page	
Inch	mm	Profile	C/S	Seal Name	Compounds*	Inch	mm
Piston Assemblies							
SCP	–			Step Cut Piston Seal (2 PC.)	Piston Seal: M1005 Expander: N6001	184	–
SPS	MSPS			Piston Assembly (5 PC.)	Piston Seal: Nitrile Back-Up Rings: Nylon® Guide Rings: Polyacetal	Contact MFP Seals for more information	
SPS-B	–			Piston Assembly (5 PC.)	Piston Seal: Nitrile Back-Up Rings: Nylon® Guide Rings: Polyacetal	Contact MFP Seals for more information	
TPR	–			Rectangular Piston Seal (2 PC.)	Rectangular Piston Ring: T1075, T1125, T5100 O-Ring Expander: N6001, V7100, V7155	185	–
TPM	–			Midsize Piston Seal (2 PC.)	Midsize Piston Ring: T1075, T1125, T5100 O-Ring Expander: N6001, V7100, V7155	187	–
TPS	–			Square Piston Seal (2 PC.)	Square Piston Ring: T1075, T1125, T5100 O-Ring Expander: N6001, V7100, V7155	189	–
Buffer Rings							
BRS	MBRS			Rod Buffer Seal	Rod Buffer Seal: T1125, T5100 O-Ring Expander: N6001	192	334
BRU	MBRU			Rod Buffer Seal	U2150, U2151, U4150, H2155	196	–
BRU	MBRU			Rod Buffer Seal with Anti-Extrusion Ring	Rod Buffer Seal: U2150, U2151, U4150, H2155 AE Ring: M1001	197	336
URB	MURB			Buffer Ring	U2145, U2162	Contact MFP Seals for more information	

Compound information available on pages 20-37.

Surface Finish: ISO 4287 & Chamfer Information on pages 7-9.
For ISO tolerance charts, refer to pages 12-13.

Prefix Inch	Prefix mm	Profile	C/S	Seal Name	Compounds*	Page Inch	Page mm
Rod Wipers							
AN	–			An Style Rod Wiper Slotted Heel	U2145, U2150, U2151, U2162, U4150, H2155	199	–
BT	–	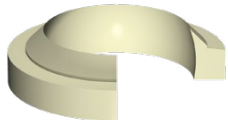		Rod Wiper	Hytrel®	Contact MFP Seals for more information	
CSW	MCSW			Rod Wiper	Nylon®, MOS2	Contact MFP Seals for more information	
D	–		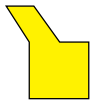	D Style Rod Wiper Slotted Heel	U2145, U2150, U2151, U2162, U4150, H2155	201	–
DF	–			DF Style Rod Wiper Slotted Heel	U2150, U2151, U4150	204	–
DM	MDRW			DM Style Ribbed Rod Wiper	U2145, U2150, U2151, U4150, H2155	205	337
H	–			H Style Rod Wiper	U2145, U2150, U2151, U2162, U4150, H2155, CN80, V7625, VT90	206	–
H	–			H Style Extended Lip Rod Wiper	U2145, U2162	Contact MFP Seals for more information	
HMW	MHMW	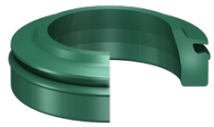		Rod Wiper Slotted Heel	U2150	Contact MFP Seals for more information	
–	MHRW			MHRW Metric H Rod Wiper	U2145, U2150, U2151, U2162, U4150, H2155	–	339
K	–			K Style Rod Wiper	U2145, U2150, U2151, U2162, U4150, H2155	208	–

Surface Finish: ISO 4287 & Chamfer Information on pages 7-9.
For ISO tolerance charts, refer to pages 12-13.

Compound information available on pages 20-37.

Prefix Inch	Prefix mm	Profile	C/S	Seal Name	Compounds*	Page Inch	Page mm
Rod Wipers							
MC	–	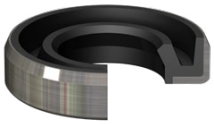		Metal Clad Rod Wiper	NBR / Carbon Steel	210	–
MC	MMCU	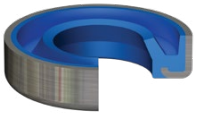		Metal Clad Rod Wiper	U2146, U2168 Carbon Steel	212	Ask MFP Seals for more info
MK30	–			Rod Wiper	Nitrile / Metal	Contact MFP Seals for more information	
–	MKCK	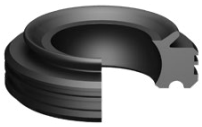		Rod Wiper	NBR (Nitrile)	Contact MFP Seals for more information	
MCH	MMCH			Rod Wiper	U2146, U2168 Carbon Steel	Contact MFP Seals for more information	
–	MMCP	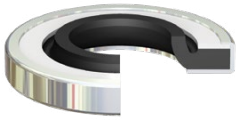		Rod Wiper	Nitrile / Steel	Contact MFP Seals for more information	
MCW	MMCW			Rod Wiper	U2146, U2168 Carbon Steel	Contact MFP Seals for more information	
OHW	MOHW			Rod Wiper	Wiper: T5100 O-Ring Energizer: N6001	215	341
–	MRCG			Rod Wiper	Nitrile / Steel	Contact MFP Seals for more information	
RCM	MRCM	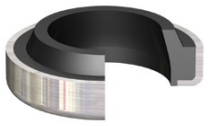		Metal Clad Rod Wiper	N6003 / Steel	–	343
–	MSRW			Metric Stepped Ribbed Rod Wiper	U2145, U2150, U2151, U2162, U4150, H2155	–	345

Compound information available on pages 20-37.

Surface Finish: ISO 4287 & Chamfer Information on pages 7-9.
For ISO tolerance charts, refer to pages 12-13.

Prefix Inch	Prefix mm	Profile	C/S	Seal Name	Compounds*	Page Inch	Page mm
Rod Wipers							
ODW	MODW			Rod Wiper	Wiper: T5100 O-Ring Energizer: N6001	219	–
PWO	–			Rod Wiper	Nitrile	Contact MFP Seals for more information	
PWS	PWSM			Rod Wiper	Nitrile	Contact MFP Seals for more information	
Rod Scrapers							
A	–		Medium Duty	Hydrowype® A-Series Style-1 - MS28776 Original AN-style scrapers. Single-piece construction.	Copper Based Alloy	223	–
A	AM		Medium Duty	Hydrowype® A-Series Style-2 - MS28776-M2 Mil-spec scrapers. Multi-piece construction. Welded Serpentine Spring.	Copper Based Alloy	223	347
A	–		Medium Duty	Hydrowype® A-Series Style-3 - Commercial grade for MS33675 grooves, Multi-piece construction (Dual C-Springs).	Copper Based Alloy	223	–
AE	–	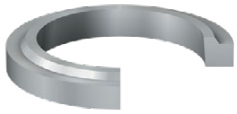	Medium Duty	Hydrowype® A-Series, AE Style-1 Original AN-style scrapers. Single-piece construction.	303 Stainless Steel	226	–
AE	AME		Medium Duty	Hydrowype® A-Series, AE & AME Style-2 scrapers. Multi-piece construction. Welded Serpentine Spring.	303 Stainless Steel	226	350
AE	–	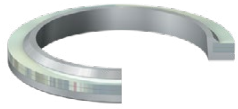	Medium Duty	Hydrowype® A-Series, AE Style-3 - Commercial grade for MS33675 grooves. Multi-piece construction. Dual C-Springs.	303 Stainless Steel	226	–
AC	–		Medium Duty	Hydrowype® A-Series Style-2 - Field-retrofit scrapers. Fully broken, 2-piece scraper bodies.	Copper Based Alloy	229	–
AO	–		Medium Duty	Hydrowype® A-Series, AO Rod Scraper - O-Ring sealed (outside diameter) scrapers.	Copper Based Alloy	232	–

Surface Finish: ISO 4287 & Chamfer Information on pages 7-9.
For ISO tolerance charts, refer to pages 12-13.

Compound information available on pages 20-37.

Prefix Inch	Prefix mm	Profile	C/S	Seal Name	Compounds*	Page Inch	Page mm
Rod Scrapers							
AR	–	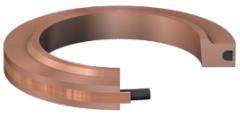	Medium Duty	Hydrowype® A-Series, AR The MS28776-R2 variant of A-Series, Style-2, utilizes a rubber energizer with a metal retaining band.	Copper Based Alloy	235	–
AT	–		Medium Duty	Hydrowype® A-Series, AT Style-2 - "Thick" Scraper for rods starting at 11" Diameter.	Copper Based Alloy	238	–
AWC	MAWC	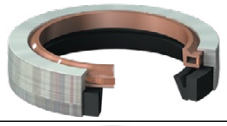	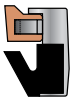 Medium Duty	Press-in, A-Series, Style-2 Scraper with wiper backup.	Scraper: Copper Based Alloy Can: Carbon Steel Wiper: NBR	Contact MFP Seals for more information	
AWC	MAWC	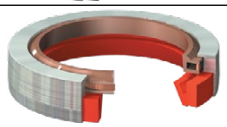	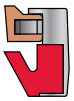	Press-in, A-Series, Style-2 Scraper with wiper backup.	Scraper: Copper Based Alloy Can: Carbon Steel Wiper: U2151	Contact MFP Seals for more information	
AD	–		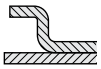	Hydrowype® AD - Adapter Keeper (Top) and follower (Bottom) plate with built-in groove for A-Series wiper.	Mild Steel (Coated or Plated)	240	–
DR	–	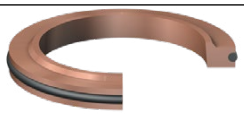	Heavy Duty	Hydrowype® D-Series - Style-1 Metallic Rod Scraper with O-Ring Seal.	Copper Based Alloy	243	–
DRH	DMRH	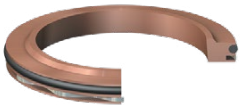	Heavy Duty	Hydrowype® D-Series - Style-2 Heavy (double thick) profile scrapers in metric sizes.	Copper Based Alloy	243	353
DRHS	–		Heavy Duty	Hydrowype® D-Series - Style-3 Slotted heel for pairing with elastomeric wipers in heavy duty applications.	Copper Based Alloy	243	–
RNL	MRNL	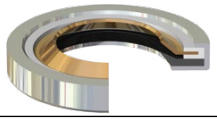	Light Duty	Rod Wiper/Scraper	Nitrile / Metal / Brass	Contact MFP Seals for more information	
HWCP	–		Heavy Duty	Heavy-Duty Metallic Rod Scraper HWCP	Cushion: NBR, FKM Scraper Rings: Brass or Bronze	Contact MFP Seals for more information	
S	–		Light Duty	Metallic Rod Scraper S	Cushion: FKM Scraper Rings: Brass or Bronze	246	–
SW	–		Light Duty	Metallic Rod Scraper SW	Cushion: FKM Scraper Rings: Brass or Bronze	248	–
SC	–		Light Duty	Metallic Rod Scraper SC	Case: Bronze Cushion: FKM Scraper Rings: Brass or Bronze	250	–

Compound information available on pages 20-37.

Surface Finish: ISO 4287 & Chamfer Information on pages 7-9.
For ISO tolerance charts, refer to pages 12-13.

Prefix Inch	Prefix mm	Profile	C/S	Seal Name	Compounds*	Page Inch	Page mm
Rod Scrapers							
SWC	–	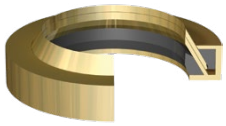	Light Duty	Metallic Rod Wiper/Scraper SWC	Case: Bronze Cushion: FKM Scraper Rings: Brass or Bronze	251	–
SWCP	–	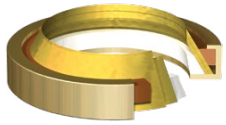	Light Duty	Metallic Rod Wiper/Scraper SWCP	Case: Bronze Cushion: Brown Viton® / T1000 Scraper Rings: Brass	252	–
Swivel Seal							
–	MSS			Metric Swivel Seal	U2151	–	354
Wear Rings							
PWS	MPWS	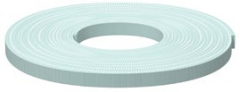		Tight Tolerance Composite Wear Strip	C4000	253	355
TWS	MTWS			Tight Tolerance PTFE Wear Strip	T5100	254	357
WR	MWR		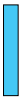	Tight Tolerance Composite Guide Ring Scarf Cut	C4000	256	–
WR	–	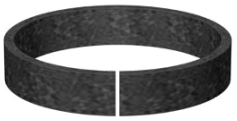		Net Molded Guide Ring Butt Cut	M1005	262	–
WR	–			Tight Tolerance Piston Guide Ring Scarf Cut	M1005	266	–
–	MWRP		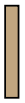	Tight Tolerance Metric Guide Ring Scarf Cut	C1000	–	361
Spring Energized Seals							
XS	MXS	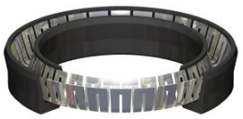		XS Seal® Spring Energized Seal	Seal Jacket: Compound varies by design Spring: Elgiloy, Hastelloy, Stainless Steel Spring Style: V, Helical, Slanted Coil Other materials available.	271	384

Surface Finish: ISO 4287 & Chamfer Information on pages 7-9.
For ISO tolerance charts, refer to pages 12-13.

Compound information available on pages 20-37.

Seal Profile Index

MFPSEALS
www.mfpseals.com

Prefix Inch	Prefix mm	Profile	C/S	Seal Name	Compounds*	Page Inch	Page mm
Oil Seals							
OS	MOS			Oil Seal	Carbon Steel Nitrile	Contact MFP Seals for more information	
OS	–	 	 	EP2 Oil Seal EP2X	PTFE Steel	Contact MFP Seals for more information	
VA	–	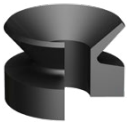		V-Ring	Nitrile	Contact MFP Seals for more information	
VL	–			V-Ring	Nitrile	Contact MFP Seals for more information	
VS	–			V-Ring	Nitrile	Contact MFP Seals for more information	
Bushings / Bearings							
DU	MDU			DU Bushing	Steel Filled PTFE	Contact MFP Seals for more information	
Washers							
FS400				Washer	Nitrile Carbon Steel	Contact MFP Seals for more information	
FS600				Washer	Nitrile Carbon Steel	Contact MFP Seals for more information	
TS7500				Washer	Nitrile Carbon Steel	Contact MFP Seals for more information	

Compound information available on pages 20-37.

Surface Finish: ISO 4287 & Chamfer Information on pages 7-9.
For ISO tolerance charts, refer to pages 12-13.

Prefix Inch	Prefix mm	Profile	Seal Name	Compounds*	Page Inch	Page mm
Cap / Plugs / Flange Covers						
CAP-T		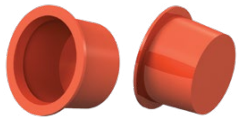	Tapered Cap Plug	Low Density Polyethylene	Contact MFP Seals for more information	
CAP-NPT		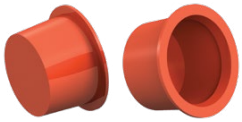	Tapered Cap Plug for NPT Ports	Low Density Polyethylene	Contact MFP Seals for more information	
CAP-G			Female Threaded Cap Plug for J.I.C.	Low Density Polyethylene	Contact MFP Seals for more information	
CAP-OR		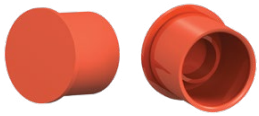	O-Ring Face Fitting Cap	Low Density Polyethylene	Contact MFP Seals for more information	
CAP-R			Male Threaded Pipe Plug (Sq. Top)	Low Density Polyethylene Blue	Contact MFP Seals for more information	
CAP-PD			Male Threaded Pipe Plug for Flared J.I.C	Low Density Polyethylene Red	Contact MFP Seals for more information	
CAP-PDF		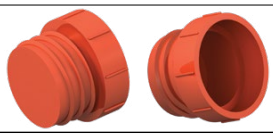	Flat Face Fitting Plug	Low Density Polyethylene Red	Contact MFP Seals for more information	
CAP-BFP			Bolted Flange Protection	Low Density Polyethylene Blue	Contact MFP Seals for more information	
CAP-XP		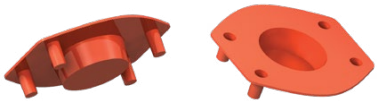	Bolted Flange Protection	Low Density Polyethylene Red	Contact MFP Seals for more information	
CAP-SF			Split Flange Face Plugs	Low Density Polyethylene Natural	Contact MFP Seals for more information	
Mechanical Seals						
PS		Designed For Your Application	Mechanical Seals	Single Spring Mechanical Seals	Contact MFP Seals for more information	

Surface Finish: ISO 4287 & Chamfer Information on pages 7-9.
For ISO tolerance charts, refer to pages 12-13.

Compound information available on pages 20-37.

Prefix	Profile	C/S	Seal Name	Compounds*	Page
Retaining Rings					
RR500			Internal Retaining Ring	Carbon Spring Steel	Contact MFP Seals for more information
RR510			External Retaining Ring	Carbon Spring Steel	Contact MFP Seals for more information
WH		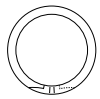	Internal Spiral Retaining Ring	Carbon Spring Steel	Contact MFP Seals for more information
WH		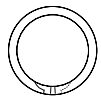	External Spiral Retaining Ring	Carbon Spring Steel	Contact MFP Seals for more information
Washers					
FS400			Washer	Nitrile Carbon Steel	Contact MFP Seals for more information
FS600			Washer	Nitrile Carbon Steel	Contact MFP Seals for more information
TS7500			Washer	Nitrile Carbon Steel	Contact MFP Seals for more information
Packing					
TVS			PTFE Stem Packing	PTFE	Contact MFP Seals for more information
BP			Braided Packing Style-154	PTFE Filament Food Grade	Contact MFP Seals for more information
BP			Braided Packing Style-165	Graphite Filled GFO Fiber Yarn	Contact MFP Seals for more information
BP			Braided Packing Style-182	Spun Aramid Fiber with PTFE & Lubricant	Contact MFP Seals for more information

Compound information available on pages 20-37.

Surface Finish: ISO 4287 & Chamfer Information on pages 7-9.
For ISO tolerance charts, refer to pages 12-13.

Prefix	Profile (C/S)	Seal Name	Compounds*	Page
Packing				
BP		Braided Packing Style-380	Synthetic Fiber Impregnated with Graphite	Contact MFP Seals for more information
BP		Braided Packing Style 528	Flax Lubricated	Contact MFP Seals for more information
BP		Braided Packing Style-1000i	Braided Flexible Graphite	Contact MFP Seals for more information
Gasket Material				
SG		Corrugated Roll FG: 4000	Flexible Graphite Tape No Adhesive	Contact MFP Seals for more information
SG		Compressed Non-Asbestos 4401 Sheet	General Purpose Synthetic Fiber NBR: Green	Contact MFP Seals for more information
SG		Compressed Non-Asbestos 4430 Sheet	General Purpose Fiberglass/Aramid NBR Off White	Contact MFP Seals for more information
SG		Compressed Non-Asbestos 4500 Sheet	General Purpose Synthetic Fiber NBR - Green	Contact MFP Seals for more information
SG		Compressed Non-Asbestos 9000 Sheet	Unbranded General Service NBR: Green	Contact MFP Seals for more information
SG	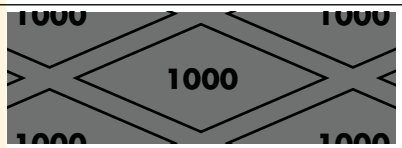	Plant Fiber 1000 Sheet	Plant Fiber Sheet	Contact MFP Seals for more information
SG		Plant Fiber 2000 Sheet	Fibercork Sheet	Contact MFP Seals for more information

Prefix	Profile (C/S)	Seal Name	Compounds*	Page
Gasket Material				
SG		Plant Fiber 3097 Sheet	Fibreflex Sheet	Contact MFP Seals for more information
SG		Rubber Sheet 1060	Commercial Neoprene® Sheet	Contact MFP Seals for more information
SG		Rubber Sheet 1564	Red Silicone Sheet Fiberglass Inserted	Contact MFP Seals for more information
SG		Rubber Sheet 2075	Red Rubber Sheet Matte Finish	Contact MFP Seals for more information
SG		Rubber Sheet 2840	Natural Rubber - Tan	Contact MFP Seals for more information
SG		Rubber Sheet 3560	Commercial Nitrile Sheet	
SG	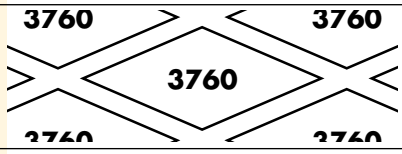	Rubber Sheet 3760	White FDA Nitrile Sheet	Contact MFP Seals for more information
SG		Rubber Sheet 4060	Commercial EPDM Sheet	Contact MFP Seals for more information
SG		Rubber Sheet 4830	Cloth Inserted Rubber Sheet SBR / Polyester	Contact MFP Seals for more information
SG		Rubber Sheet 5070	48" Diaphragm Sheet Neoprene / Polyester	Contact MFP Seals for more information
SG		Rubber Sheet 5170	48" Cloth Inserted Sheet Neoprene / Poyester	Contact MFP Seals for more information

Prefix	Profile (C/S)	Seal Name	Compounds*	Page
Gasket Material				
SG		Joint Sealant JS Cord	Expanded PTFE	Contact MFP Seals for more information
SG		TS - PTFE Sheet Material	Expanded PTFE	Contact MFP Seals for more information
SG		TS - 1000 Sheet Material	Virgin PTFE	Contact MFP Seals for more information
SG		TS - 1075 Sheet Material	25% Glass Filled PTFE	Contact MFP Seals for more information
SG	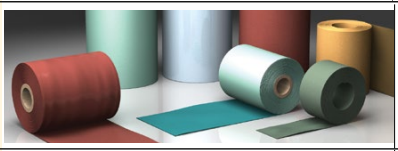	Skived PTFE Film & Tape Sheet Material	T1100,T1150,T4000, T4025,T4050,T4075, T4100,T4125,T4150, T4175,T4200,T4225	Contact MFP Seals for more information
SG	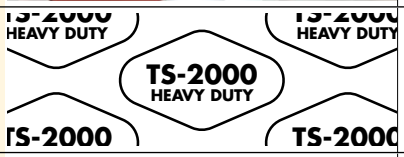	TS - 2000 Sheet Material	Heavy Duty PTFE Gasket Material FDA Compatible	Contact MFP Seals for more information
SG	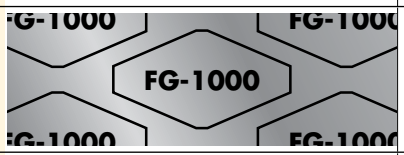	FG - 1000 Sheet Material	Pure Flexible Graphite No Insert	Contact MFP Seals for more information
SG	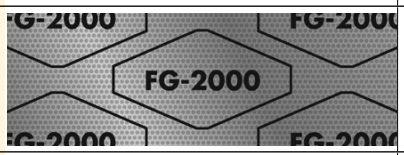	FG - 2000 Sheet Material	Pure Flexible Graphite .002" 316 Stainless Steel Insert	Contact MFP Seals for more information
SG	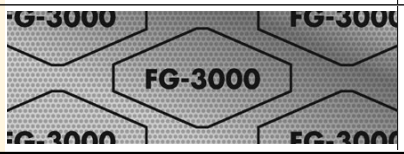	FG - 3000 Sheet Material	Laminated Flexible Graphite .004" 316 Stainless Steel Tanged Insert	Contact MFP Seals for more information
Rod & Tube Stock				
	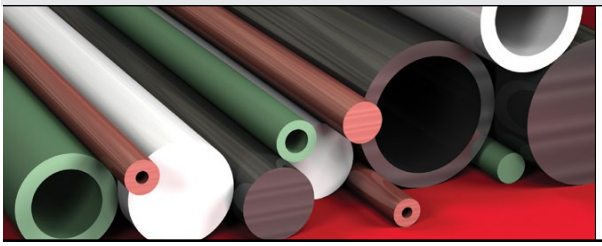	Rod & Tube Stock	Available in a variety of Virgin and Filled compounds. Contact MFP Seals for currently available materials and sizes.	

Surface Finish: ISO 4287 & Chamfer Information on pages 7-9.
For ISO tolerance charts, refer to pages 12-13.

Compound information available on pages 20-37.

Prefix	Profile (C/S)	Seal Name	Compounds*	Page
Pipe Flange Gaskets				
RG		150 LB. - Ring Style Flange Gasket	Compressed Non-Asbestos	Contact MFP Seals for more information
FF		150 LB. - Full Face Flange Gasket	Compressed Non-Asbestos	Contact MFP Seals for more information
RG		300 LB. - Ring Style Flange Gasket	Compressed Non-Asbestos	Contact MFP Seals for more information
FF		300 LB. - Full Face Flange Gasket	Compressed Non-Asbestos	Contact MFP Seals for more information
RG		150 LB. - Ring Style Flange Gasket	Neoprene	Contact MFP Seals for more information
FF		150 LB. - Full Face Flange Gasket	Neoprene	Contact MFP Seals for more information
RG		300 LB. - Ring Style Flange Gasket	Neoprene	Contact MFP Seals for more information
FF		300 LB. - Full Face Flange Gasket	Neoprene	Contact MFP Seals for more information
RG		150 LB. - Ring Style Flange Gasket	Red Rubber	Contact MFP Seals for more information
FF		150 LB. - Full Face Flange Gasket	Red Rubber	Contact MFP Seals for more information
RG		300 LB. - Ring Style Flange Gasket	Red Rubber	Contact MFP Seals for more information

Compound information available on pages 20-37.

Surface Finish: ISO 4287 & Chamfer Information on pages 7-9.
For ISO tolerance charts, refer to pages 12-13.

Prefix	Profile (C/S)	Seal Name	Compounds*	Page
Pipe Flange Gaskets				
FF		300 LB. - Full Face Flange Gasket	Red Rubber	Contact MFP Seals for more information
RG		150 LB. - Ring Style Flange Gasket	Expanded PTFE	Contact MFP Seals for more information
FF		150 LB. - Full Face Flange Gasket	Expanded PTFE	Contact MFP Seals for more information
RG		300 LB. - Ring Style Flange Gasket	Expanded PTFE	Contact MFP Seals for more information
FF		300 LB. - Full Face Flange Gasket	Expanded PTFE	Contact MFP Seals for more information
RG		150 LB. - Ring Style Flange Gasket	PTFE	Contact MFP Seals for more information
FF		150 LB. - Full Face Flange Gasket	PTFE	Contact MFP Seals for more information
RG		300 LB. - Ring Style Flange Gasket	PTFE	Contact MFP Seals for more information
FF		300 LB. - Full Face Flange Gasket	PTFE	Contact MFP Seals for more information
RG		150 LB. - Ring Style Flange Gasket	Graphite Laminate	Contact MFP Seals for more information
FF		150 LB. - Full Face Flange Gasket	Graphite Laminate	Contact MFP Seals for more information

Prefix	Profile (C/S)	Seal Name	Compounds*	Page
Pipe Flange Gaskets				
RG		Ring Style - 150#, 300# Envelope Gasket & Filler Material	T1000 (Virgin PTFE) Envelope supplied with specified filler (gasket) material.	Contact MFP Seals for more information
FF		Full Face - 150#, 300# Envelope Gasket & Filler Material	T1000 (Virgin PTFE) Envelope supplied with specified filler (gasket) material.	Contact MFP Seals for more information
RG		Ring Style - 150#, 300# Envelope Gasket	T1000 (Virgin PTFE) Envelope Only	Contact MFP Seals for more information
FF		Full Face - 150#, 300# Envelope Gasket	T1000 (Virgin PTFE) Envelope Only	Contact MFP Seals for more information
SW	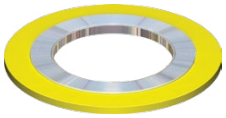	Spiral Wound Gasket 150#, 300#, 400#, 600#, 900#, 1500#	304 Stainless Steel Flexible Graphite	Contact MFP Seals for more information
SW	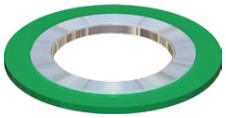	Spiral Wound Gasket 150#, 300#, 400#, 600#, 900#, 1500#	304 Stainless Steel Flexible Graphite	Contact MFP Seals for more information
FLANGE GASKETS - Ring Type Joint Gaskets				
RTJ	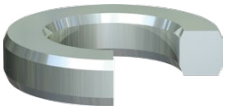	BX Ring Type Joint Gasket ASME B16.20 Compliant	Soft Iron Low Carbon Steel 304 Stainless Steel 316 Stainless Steel	Contact MFP Seals for more information
RTJ		RX Ring Type Joint Gasket ASME B16.20 Compliant	Soft Iron Low Carbon Steel 304 Stainless Steel 316 Stainless Steel	Contact MFP Seals for more information
RG	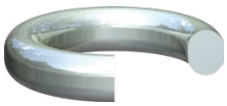	RG Oval Ring Type Joint Gasket ASME B16.20 Compliant	Soft Iron Low Carbon Steel 304 Stainless Steel 316 Stainless Steel	Contact MFP Seals for more information
FF	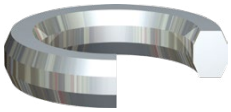	Octagonal Ring Type Joint Gasket ASME B16.20 Compliant	Soft Iron Low Carbon Steel 304 Stainless Steel 316 Stainless Steel	Contact MFP Seals for more information

Compound information available on pages 20-37.

Surface Finish: ISO 4287 & Chamfer Information on pages 7-9.
For ISO tolerance charts, refer to pages 12-13.

Prefix	Profile (C/S)	Seal Name	Compounds*	Page
Valve Seals				
MFP-H		U Packing	Jacket: PTFE Filler Core: Nitrile or FKM	Contact MFP Seals for more information
Flowline				
HUS		Hammer Union Seal	PTFE	Contact MFP Seals for more information
HUS		Hammer Union Seal	NBR 80 HNBR 80 FKM 80 & 90	Contact MFP Seals for more information
HUS		Hammer Union Seal	NBR 85 / FKM 90 with Brass Back-Up Ring	Contact MFP Seals for more information
HUS		Hammer Union Seal	FKM 80 & 90 with Stainless Steel Back-Up Ring	Contact MFP Seals for more information
PVS		Plug Valve Seal	1" and 2" NBR with Brass Back-Up Ring	Contact MFP Seals for more information
PVS	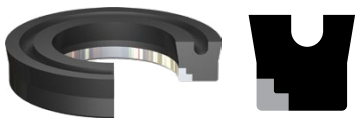	Plug Valve Seal	1" and 2" HNBR or FKM with Stainless Steel Back-Up Ring	Contact MFP Seals for more information
SJP		Swivel Joint Seal	1" and 2" NBR with Brass Back-Up Ring	Contact MFP Seals for more information
SJP		Swivel Joint Seal	1" and 2" NBR with Stainless Steel Back-Up Ring	Contact MFP Seals for more information

Prefix	Profile (C/S)	Seal Name	Compounds*	Page
Manhole / Handhole Gaskets				
SG-TG	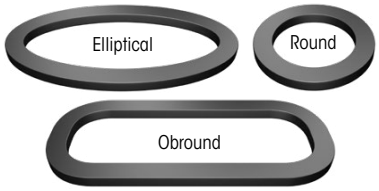	TOPOG-E	Molded Rubber Gaskets	Contact MFP Seals for more information
SG-WG		Manhole Handhole Gasket	Wire Inserted Fiberglass Gasket	Contact MFP Seals for more information
Sanitary Gaskets				
40MO-E		Standard Clamp	E Material: PDM 70 - Black	Contact MFP Seals for more information
40MO-EG		Standard Clamp	EG Material: EPDM 70 - Lt. Green	Contact MFP Seals for more information
40MO-EN		Standard Clamp	EN Material: EPDM 70 - Black	Contact MFP Seals for more information
40MO-G		Standard Clamp	G Material: PTFE - White	Contact MFP Seals for more information
40MO-SFY		Standard Clamp	SFY Material: Viton® (FKM) 70 - Black	Contact MFP Seals for more information
40MO-SFYB		Standard Clamp	SFYB Material: Viton® (FKM) 75 - Brown	Contact MFP Seals for more information
40MO-U		Standard Clamp	U Material: BUNA Nitrile 70 - Black	Contact MFP Seals for more information

Prefix	Profile (C/S)	Seal Name	Compounds*	Page
Sanitary Gaskets				
40MO-UN		Standard Clamp	UN Material: BUNA Nitrile 70 - Black	Contact MFP Seals for more information
40MO-UW		Standard Clamp	UW Material: BUNA Nitrile 70 - White	Contact MFP Seals for more information
40MO-X		Standard Clamp	X Material: Silicone 70 - Rust	Contact MFP Seals for more information
40MO-XW		Standard Clamp	XW Material: Silicone 70 - White	Contact MFP Seals for more information
40MP-E		Standard Clamp	E Material: EPDM: 70 - Black	Contact MFP Seals for more information
40MP-EG		Standard Clamp	EG Material: EPDM 70 - Lt. Green	Contact MFP Seals for more information
40MP-EN		Standard Clamp	EN Material: EPDM 70 - Black	Contact MFP Seals for more information
40MP-G		Standard Clamp	G Material: PTFE - White	Contact MFP Seals for more information
40MP-SFY		Standard Clamp	SFY Material: Viton® (FKM) 70 - Black	Contact MFP Seals for more information
40MP-SFYB		Standard Clamp	SFYB Material: Viton® (FKM) 75 - Brown	Contact MFP Seals for more information

Prefix	Profile (C/S)	Seal Name	Compounds*	Page
Sanitary Gaskets				
40MP-U		Standard Clamp	U Material: BUNA Nitrile 70 - Black	Contact MFP Seals for more information
40MP-UN		Standard Clamp	UN Material: BUNA Nitrile 70 - Black	Contact MFP Seals for more information
40MP-UW		Standard Clamp	UW Material: BUNA Nitrile 70 - White	Contact MFP Seals for more information
40MP-X	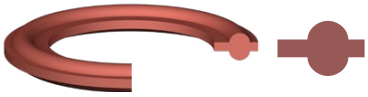	Standard Clamp	X Material: Silicone 70 - Rust	Contact MFP Seals for more information
40MP-XW		Standard Clamp	XW Material: Silicone 70 - White	Contact MFP Seals for more information
42MP-E		Mini Clamp	E Material: EPDM 70 - Black	Contact MFP Seals for more information
42MP-EG		Mini Clamp	EG Material: EPDM 70 - Lt. Green	Contact MFP Seals for more information
42MP-EN		Mini Clamp	EN Material: EPDM: 70 - Black	Contact MFP Seals for more information
42MP-G		Mini Clamp	G Material: PTFE - White	Contact MFP Seals for more information
42MP-SFY		Mini Clamp	SFY Material: Viton® (FKM) 70 - Black	Contact MFP Seals for more information
42MP-SFYB		Mini Clamp	SFYB Material: Viton® (FKM) 75 - Brown	Contact MFP Seals for more information

Compound information available on pages 20-37.

Surface Finish: ISO 4287 & Chamfer Information on pages 7-9.
For ISO tolerance charts, refer to pages 12-13.

Prefix	Profile (C/S)	Seal Name	Compounds*	Page
Sanitary Gaskets				
42MP-U		Mini Clamp	U Material: BUNA Nitrile 70 - Black	Contact MFP Seals for more information
42MP-UN		Mini Clamp	UN Material: BUNA Nitrile 70 - Black	Contact MFP Seals for more information
42MP-UW		Mini Clamp	UW Material: BUNA Nitrile 70 - White	Contact MFP Seals for more information
42MP-X		Mini Clamp	X Material: Silicone 70 - Rust	Contact MFP Seals for more information
42MP-XW		Mini Clamp	XW Material: Silicone 70 - White	Contact MFP Seals for more information

Advertisements

MFP Seals Services Ad	36
Continuously Molded O-Rings	37
Color Me PTFE - PTFE Coatings for O-Rings	38
Mega O-Ring Kits	80
PTFE Envelope Gaskets	146
Dip Tubes & Spargers	214
PTFE Ball Valve Seats	255
Machined Plastic Products	274
PTFE Rods & Tubes	310
PTFE Skived Tape	386
Thread Seals	387
PTFE Etching	388
PTFE Sheets	389
PTFE Balls	390
PTFE Spacers	391
PTFE Lantern Rings	392
Flow Indicators	393
Flowline - Hammer Union Seals	394

If you don't see what you need, give an MFP Seals' Sales Representative a call.

We can help you find the part you are looking for,
or we can work with you to manufacture the right part for your application.

Visit our website @ **www.mfpseals.com** to find the location nearest you.

Call our Corporate Headquarters @ **(248) 585-8170**

Email us @ **sales@mfpseals.com**

BUILDING MFP SEALS® FOR YOU

MFP Seals is a leading manufacturer and global supplier of injection molded and CNC machined, thermoplastic, elastomeric and composite products. Offering in-house engineering, manufacturing and testing, with an extensive portfolio of hydraulic and pneumatic sealing devices, machined plastic products, die cut gaskets, roll or sheet materials, and specially developed compounds, we are the perfect source for your design and manufacturing needs.

Through an exclusive network, MFP Seals extends its global reach with key Authorized Distributorships around the globe. MFP Seals works closely with distributors, and customers in the field, studying feedback to improve product performance. Throughout the product's lifespan, from initial design to delivery, we maintain a chain-of-evidence to ensure traceability and accountability of both the products and the materials used to produce them.

INJECTION MOLDING

If you are in need of Injection Molding, MFP Seals keeps the pressure on, producing outstanding molded products on presses up to 500 ton. Keeping our tooling, design and production, in-house, guarantees that quality control is maintained throughout the manufacturing process. From simple to complex mold construction, free-standing or insert molds with multiple cavities, custom shapes, actions and slides, elastomer to metal bonding, low to high volume, our Injection Molding division has the experience to handle your request.

CNC MACHINING

Our business is reliant on the cutting edge of CNC Mill and Lathe operations, maintaining a machining group that covers the gamut of manual to modern technology, giving us both old and new school machining proficiency. With the ability to turn up to 1,000 mm, or 40 inches in diameter, we can handle your larger project requirements. And, if your design requires live tooling or multi-axis travel, we're ready to take on your most complex projects.

LOGISTICS

MFP Seals' world headquarters, located in Madison Heights, Michigan, is home to our Corporate and Engineering offices, Research & Development center, and our Manufacturing facilities; occupying nearly 40,000 square feet. Nearby, in Troy, Michigan, a Kitting and Shipping facility utilizes over 30,000 square feet of warehouse and sales offices. Complementing the corporate headquarters, MFP Seals has five branch offices in the United States, located in Troy, Michigan; St. Joseph, Michigan; Houston, Texas; Phoenix, Arizona; and Tampa, Florida; with overseas locations in Lincoln, England, and Taipei, Taiwan.

QUALITY ASSURANCE

At MFP Seals we stand behind our products. Our knowledgeable and experienced staff can troubleshoot problems, should any arise. We can help diagnose problems and recommend solutions through replacement, modification, redesign, or alternate material selection. Our goal is to improve the performance and longevity of your equipment. With each evolution of a product's design, or modification of materials, we put forth what we feel is the best product on the market today!

SEALING IN SUCCESS™

While maintaining a worldwide presence, and respect for the different cultures around the globe, MFP Seals retains its American Heritage, taking pride in being American Owned and Operated, for over 40 years. Inheriting the legacy of Martin Fluid Power (est. 1977), MFP Seals is continuously developing products which are engineered, tested, and manufactured, solely in the U.S.A.

By utilizing local sourcing of materials (whenever possible), and in-house design and manufacturing capabilities, we are able to reduce costs, avoid tariffs, maintain strict quality standards, and greatly reduce lead times. From start to finish, our goal at MFP Seals is Sealing in Success™, the successful performance of our products, and the success of the businesses worldwide that depend on our products every day.

OUR FOCUS

We welcome you to the MFP Seals family of products and services. MFP Seals will work to provide you, our customer, with the best solutions for your sealing device or plastic products needs, while maintaining the highest quality, competitive pricing, and all the conveniences that a global manufacturer can provide.

ISO 9001 CERTIFIED · ANSI / ISO / ASQ Q9001-2015

RETURN TO INDEX

ELASTOMERS, COMPOSITES & THERMOPLASTICS

- AEM 87A
- Aflas® 85A
- Aflas® ED 85A
- C1000 Phenolic Composite
- C2000 Phenolic Composite w/Graphite
- C4000 Polyester Composite w/PTFE
- C4025 Polyester Composite w/Graphite
- Carboxylated Nitrile 85A
- EPDM 87A FDA (White)
- EPDM 88A W270, KTW (Black)
- FPM 85A
- FPM 85A FDA
- FPM BS3 80A
- FPM DCP 84A (Black)
- FPM ED 85A
- H2140 - Hytrel® 40D
- H2155 - Hytrel® 55D
- HNBR 82A FDA (Green)
- HNBR 95A (Black)
- HNBR ED 85A (Black)
- HPU 58D (Dark Red)
- HPU 58D Lubricated (Black)
- HPU 85A (Light Green)
- HPU 95A KTW (Transparent)
- HPU 95A Low Temp (Blue)
- HPU 95A Lubricated (Black)
- HPU 96A FDA, 3A-sanitary (Opaque)
- M1000 (Polyether Ether Ketone - PEEK™)
- M1001 (Acetal)
- M1002 (Nylon® 6 MOS2)
- M1005 (40% Glass, Nylon)
- M1006 (UHMW-PE)
- M1007 (PEEK™, 30% Carbon Fiber)
- M1008 (PEEK™, 30% Glass Fiber)
- MVQ 79A, 84A FDA
- NBR 82A Low Temp
- NBR 85A, 90A
- NBR 90A FDA (White)
- PU 95A (Dark Green)
- T1000 (PTFE, Virgin)
- T1025 (PTFE, Moly)
- T1050 (PTFE, Glass)
- T1075 (PTFE, Glass)
- T1100 (PTFE, Glass, Moly)
- T1125 (PTFE, Carbon, Graphite)
- T1150 (PTFE, Carbon)
- T1175 (PTFE, Carbon)
- T1200 (PTFE, Graphite)
- T1225 (PTFE, Ekonol)
- T1250 (PTFE, Polyimide)
- T2000 (TFM, Unfilled)
- T2025 (TFM, Carbon)
- T2050 (TFM, Carbon, Carbon Fiber)
- T2075 (TFM, Carbon Fiber)
- T5000 (PTFE Bronze)
- T5025 (PTFE, Bronze, Moly)
- T5050 (PTFE, Bronze)
- T5100 (PTFE, Enhanced Bronze)
- U2145 TPU 95A
- U2146 TPU 90A
- U2151 TPU 95A
- U4145 TPU 95A TODI
- U4150 TPU 90A PPDI

Other materials available, contact the MFP Seals Engineering Department for more information.

STANDARD SEAL PROFILES OR CUSTOM SHAPES MADE TO ORDER

QUICK TURN-AROUND ON PROTOTYPES OR PRODUCTION

(see the custom machined seals section of this guide)

CNC Machining

Injection Molding

PTFE COLOR COATING ▶

- PTFE color coatings make identification easy, when used to distinguish sizes or materials.
- The PTFE coating extends wear life, resulting in reduced material decay and less downtime.
- Coated O-Rings are less susceptible to contamination and are easier to handle by not having to deal with messy oil-based lubricants.
- Added lubrication makes installation easier, reduces assembly time, and keeps machinery running smoother, longer. Less down-time equals more profit.

SERVICES & QUALITY

MFP Seals state-of-the-art measuring center allows for precision measuring of product to ensure they meet our quality standards and your specified tolerances. This powerful vision system is accurate up to 0.4 µm. So, we know without a doubt, that our parts will fit your application.

CERTIFICATE OF REGISTRATION

GMSR

ISO 9001

Martin Fluid Power, Inc.

900 E. Whitcomb Ave. Madison Heights, MI 48071

With Facilities at:

400 Mamaroneck Ave., Harrison, NY 10528, 2525 E. Belvedere Ave., St. Joseph, MO 49085, 6220 Washington Blvd., Fort Wayne, IN 46804, 1000 Ridge Rd., Nappanee, IN 46550, 7439 Jim Cole Ave. N., Tempe, AZ 85282

And international locations at:

47 Nevill Rd, Eastbourne, Sussex BN22 7QD, England, 1 Fleet Lane Bldg. 1, Unit 1, Fleet Business Centre, Fleetwood Fly, Lincoln LN6 9GB

Global Management System Registration, LLC issues this certificate to the firm named above, having assessed and approved the firm's quality management system and finding the system conform to the standards of:

ISO 9001-2015

ANSI / ISO / ASQ Q9001-2015

The Quality Management System is applicable to the following:

Worldwide Manufacturer and Distributor of Seals, Packing, Gaskets and Seal Kits

This approval is subject to the firm maintaining its system to the standard and subject to such visit by assessment by Client

Certificate Number: GMSR C1007-1604

Date of Issue: November 08, 2017

Date of Expiration: November 08, 2020

Trevor J. Bird On behalf of GMSR

Global Management System Registration, LLC

GMSR

612 West Columbia Road, Mason, MI 48854

Services:

- Blanket Orders
- JIT Inventory
- KanBan

Quality:

- ISO 9001-2008 Certified
- PPAP Submission
- Certification of Materials
- Non-contact vision system (0.4 µm)

CUSTOM PACKAGING AND KITTING

At MFP Seals we design, manufacture and package the highest quality seal kits in the industry. Whether you need seal kits for hydraulic or pneumatic cylinders, pumps, valves, or motors, we can meet or exceed your specifications. Our kitting services include custom packaging from shrink wrapping, bagging and labeling, to custom printed boxes, blister packaging and skin board packaging. We now offer skin board packaging, that can be custom printed on demand.

At MFP Seals we have experience designing custom packaging for these Industries and more:

- Automotive
- Marine
- Chemical Processing
- Mining
- Construction
- Mobile
- Forestry
- Oilfield
- Industrial
- Refuse

O-RINGS

MFP Seals stocks millions of O-Rings in standard AS568A sizes, and both European and Japanese metric sizes. Our O-Rings are available in a wide variety of colors, compounds, and durometers to meet automotive, FDA, industrial, military, oil field, NORSOK, RoHS and UL specifications.

- Aflas®
- Buna N
- Butyl
- Carboxylated Nitrile
- Epichlorohydrin
- Ethylene Propylene
- Fluorocarbon
- Fluorosilicone
- Neoprene
- Hydrogenated Nitrile
- Metallic O-Rings
- Polyurethane
- Perfluoroelastomer
- Silicone
- Teflon®
- Teflon® Encapsulated
- Styrene Butadiene
- Vamac®

HYDRAULIC & PNEUMATIC SEALS

Our selection of inch and metric sizes, styles and materials is unsurpassed. The products that we do not produce ourselves, we supply from the world's top manufacturers, to offer you a complete selection of hydraulic and pneumatic seals.

- AN Seals
- Anti-Extrusion Rings
- Back-Up Rings
- Buffer Rings
- Cap Seals
- Capped GT Rings
- CPX - Piston Seal
- Dust Covers
- Excluders
- Flange Seals
- Guide Rings
- GT Rings
- High Pressure Seals
- High Temperature Seals
- Lip Seals
- Loaded Lip Seals
- O-PAC®
- Piston Rings
- Piston Cups
- Rod Seals
- Rotary Seals
- Scrapers/Excluders
- Spring Loaded Seals
- T-Seals
- Teflon Seals
- U-Cups
- Vee Packing Sets
- Wipers
- X-PAC®

SPRING ENERGIZED SEALS

Spring Energized Seals are designed for applications that challenge conventional seals, regardless of the media. Made from thermoplastic or PTFE materials and application based spring styles, Spring Energized Seals are used for explosive decompression resistance or AED Seals, vacuum, extreme pressure and temperature, high surface speed, non-lubricated systems, and more.

- Thermoplastic Seal
- PTFE Seal
- Helical Spring
- Slanted Coil Spring
- U & V Spring
- 301, 302, 304 & 316 Stainless Steel
- Alloy C-276 Beryllium Copper
- Elgiloy and other Alloys

OIL SEALS

We stock rotary shaft oil and grease seals in a broad range of sizes, materials, and lip styles, to fit every application.

A private labeling service is available for our products, to show your company name and part numbers. We stock a full range of inch, metric and non-standard sizes.

- Nitrile
- Low Pressure
- Polycarbonate
- High Pressure
- Silicone
- PTFE
- Viton®
- Specials

BUSHINGS, BEARINGS, & GUIDE RINGS

Bushings, Bearings and Guide Rings are known by many different names, and are used in many different applications. Whether they are made from Acetal (Delrin®), Brass, Bronze, C4000, M1005, Peek, Phenolic, Polyamides (Nylon®), Polyester, T5100, Teflon®, or UHMW, we can help you in designing, manufacturing and stocking, we have the solution you need.

- Bearing Strip
- DU Bushing
- Flanged & Journal Bearings
- Guide Rings
- Machined Plastics
- Rod End Bearings
- Rod Glands
- Self Aligning Bearings
- Self Lubricating Bearings
- Sleeve and Spherical Bearings
- Split Tension Bushings
- Thrust Bearings

DIE CUT GASKETS & SHEET MATERIALS

MFP Seals can die cut or fabricate standard or custom gaskets from our warehouse full of sheet materials.

- Boiler Gaskets
- Compressed Gaskets
- Expanded PTFE
- Cork & Rubber Sheet
- Envelope Gaskets
- Flange Gaskets
- Flexible Graphite
- Gasket Cutting Sets
- Handhole Gaskets
- Lathe Cut Gaskets
- High Temp Textiles
- Manhole Gaskets
- Rubber Sheet
- Sanitary Gaskets
- Teflon Sheet
- Spiral Wound Gaskets
- Vegetable Fibre Sheet
- Washers

These sheet materials compliment our extensive inventory of metallic, molded, or extruded gaskets.

- Cloth Inserted Rubber
- Compressed Non-Asbestos
- EPDM
- Expanded PTFE
- Flexible Graphite
- Natural Rubber
- Neoprene
- Nitrile
- Plant Fibre Sheet
- Red Rubber
- Virgin PTFE
- Viton®

OIL FIELD PRODUCTS

We offer a wide variety of oil field sealing devices. Our materials and styles are approved and industry tested and we have problem solvers to handle the most severe applications.

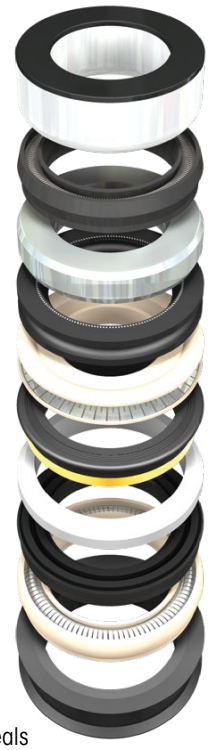

- Actuator Seals
- Blow Out Prevention Seals
- Choke Packing
- Dovetail Packing
- Explosive Decompression Resistant O-Rings
- Hammer Union Seals
- P-Seals
- Pump Packing & Seal
- Ring Gaskets
- S-Seals
- Swivel Packing & Seals
- Test Plug O-Ring
- Spring Energized Flange & Face Seals
- Valve Stem Packing
- Slick Line Stuffing Box Packing
- Subsea Equipment / Offshore Drilling Seals

DIP TUBES, SPARGERS & SPACERS

MFP Seals manufactures, custom made to order, Dip Tubes and Spargers (Aerators) from T1000 (Virgin PTFE). Designed for your application, our Dip Tubes and Spargers can handle temperatures up to +260°C (+500°F). Our T1000 compound remains inert and will not contaminate any liquids or materials it comes in contact with.

DIP TUBES & SPARGERS: Straight, Open End, Flanged, Angled, Curved, Perforated, Flow Control.

SPACERS: Standard Ring & Full Face, **Orifice** Ring and Full Face, **Blind** Ring and Full Face, **Armored** Ring and Full Face, **Paddle**

For more information on PTFE Products, see the advertisements list on Index page xxix.

ENGINEERING GUIDELINES

Cross Section vs. Diameter:

Care must be taken to properly match a seal's cross-section to its diameter. If the cross-section is too large in relation to the diameter, it will be difficult to snap-in or stretch the seal into the groove. This condition is typically only associated with polyurethane or other high modulus materials. The data shown in the Cross Section vs. Diameter chart may be used as a guide to determine this relationship for ease of installation.

Installation Guide: Cross Section vs. Diameter

	Minimum Diameter Rod Seal		Minimum Diameter Piston Seal	
Cross Section	U2145 U2151	H2155	U2145 U2151	H2155
1/8″	.750 I.D.	1.000 I.D.	1.250 I.D.	1.750 I.D.
3/16″	1.000 I.D.	1.750 I.D.	1.750 I.D.	2.750 I.D.
1/4″	1.750 I.D.	2.750 I.D.	3.000 I.D.	4.500 I.D.
5/16″	2.500 I.D.	4.000 I.D.	4.500 I.D.	6.000 I.D.
3/8″	3.000 I.D.	5.000 I.D.	6.000 I.D.	8.000 I.D.
1/2″	6.000 I.D.	8.000 I.D.	10.000 I.D.	12.000 I.D.
3/4″	8.000 I.D.	9.000 I.D.	15.000 I.D.	17.000 I.D.
1″	10.000 I.D.	10.000 I.D.	20.000 I.D.	25.000 I.D.

Effects of Lip Geometry:

The geometry of the lip is what determines the function of a seal. Shaft force concentration, ability to break the film of a fluid, tendency to hydroplane, and its ability to keep contaminants out, are all dependent upon the seal's lip shape. The table shows the four most common lip shapes and their characteristics that help determine which lip design to use in a particular seal design.

	ROUNDED	STRAIGHT CUT	BEVELED	SQUARE
SHAFT FORCE CONTACT PROFILE		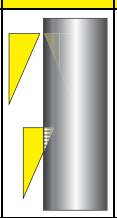	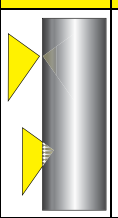	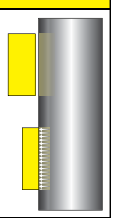
FLUID FILM BREAKING CAPABILITY	Low	High	Very High	Medium
CONTAMINANT EXCLUSION	Low	Very High	Low	High
TENDENCY TO HYDROPLANE	High	Very Low	Low	Medium
TYPICAL USES FOR LIP DESIGN	Pneumatic U-Cups	Wipers and Piston Seals	Rod Seals	Piston Seals

Cutting Instructions for Guide Rings:

Cut-to-fit guide rings can be a quick and convenient way to repair hydraulic and pneumatic cylinders. By having bulk length rolls on hand you can eliminate the need to stock multiple O.D. sizes of certain guide rings. Use the following formulas to find the correct length to cut-to-fit the perfect size guide ring for your application.

Formulas to calculate Cut-to-fit Length:
(use in conjunction with chart below)

Pistons:
Cut-to-fit Length =
[(Bore Diameter – Cross Section) x π] – Minimum Gap (G)

Rods:
Cut-to-fit Length =
[(Rod Diameter + Cross Section) x π] – Minimum Gap (G)

Piston or Rod Seal/Ring Cutting Instructions

Rod or Bore Diameter	Minimum Gap (G)	Tolerance for Cut Length (CL ±)
0.500″ - 1.750″	0.075	± .010
1.751″ - 3.125″	0.140	± .016
3.126″ - 4.000″	0.175	± .024
4.001″ - 5.000″	0.230	± .032
5.001″ - 6.000″	0.260	± .040
6.001″ - 7.000″	0.320	± .047
7.001″ - 8.500″	0.380	± .055
8.501″ - 10.500″	0.480	± .063
10.501″ - 13.000″	0.620	± .071
13.001″ - 16.000″	0.750	± .079

NOTE: For sizes not shown, please contact an MFP Seals representative.

Guidelines for Hardware Design:

MFP Seals recommends the following dimensions when designing your hardware. These dimensions will assure ease of assembly and prevent damage to the seal while your hardware is being assembled.

Installation Chamfer, Gland Radius, and Taper

Seal Cross Section	"A" Dimension	R Max. Dimension
1/16	0.035	0.003
3/32	0.050	0.016
1/8	0.050	0.016
5/32	0.070	0.016
3/16	0.080	0.016
7/32	0.080	0.016
1/4	0.080	0.016
9/32	0.085	0.016
5/16	0.085	0.016
11/32	0.085	0.016
3/8	0.090	0.016
13/32	0.095	0.016
7/16	0.105	0.030
15/32	0.110	0.030
1/2	0.120	0.030
17/32	0.125	0.030
9/16	0.130	0.030
19/32	0.135	0.040
5/8	0.145	0.040
21/32	0.150	0.040
11/16	0.160	0.040
23/32	0.165	0.040
3/4	0.170	0.040
25/32	0.180	0.060
13/16	0.185	0.060
27/32	0.190	0.060
7/8	0.200	0.080
29/32	0.205	0.080
15/16	0.215	0.080
31/32	0.220	0.080
1	0.225	0.080

Surface Finish: ISO 4287

The most common method for measuring and defining surface finish is Ra in µm or µin. Ra can mostly define a surface finish which is suitable for a sealing surface, however, the rough peaks of a surface should be blunted by being polished, honed, or roller burnished. This prevents the sharp peaks from abrading the seal and still allows the valleys to retain lubrication aiding in seal life and function. Special applications like cryogenic, small molecular weight gases, and surface coatings will differ from the general surface finish guidelines in the following table.

Ra Guidelines

Compounds	Surface Dynamic	Surface Static	Media
Hytrel®, PTFE	3 to 12	3 to 16	Hydraulic Fluid, Water, Crude Oil
NBR, Urethane, FKM	3 to 12	3 to 32	Hydraulic Fluid, Water, Crude Oil
Hytrel®, PTFE	3 to 8	3 to 16	Gases, Fuel
NBR, Urethane, FKM	3 to 12	3 to 16	Gases, Fuel

Dynamic and Static surface measurement Ra shown in µin.

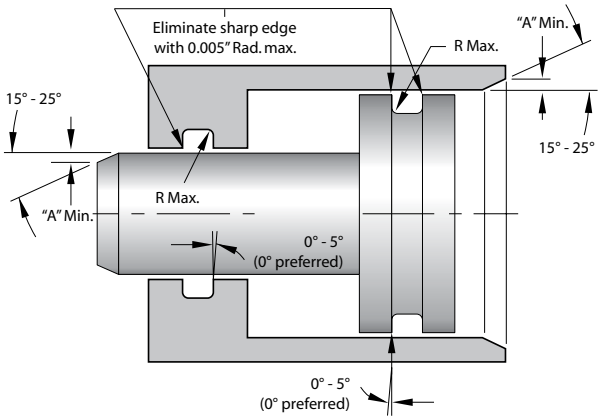

SURFACE FINISH GUIDELINES

Ra GUIDELINES

Cryogenics		
Material	**Dynamic Surface**	**Static Surface**
Thermoplastic & Rubber Seals	—	—
PTFE Seals	4 µin (0.1 µm) maximum	8 µin (0.2 µm) maximum

Gas: Helium, Hydrogen, Freon		
Material	**Dynamic Surface**	**Static Surface**
Thermoplastic & Rubber Seals	3 to 10 µin (0.08 to 0.25 µm)	12 µin (0.3 µm) maximum
PTFE Seals	6 µin (0.15 µm) maximum	12 µin (0.3 µm) maximum

Gas: Air, Nitrogen, Argon, Natural Fuel: Aircraft and Automotive		
Material	**Dynamic Surface**	**Static Surface**
Thermoplastic & Rubber Seals	3 to 12 µin (0.08 to 0.3 µm)	16 µin (0.4 µm) maximum
PTFE Seals	8 µin (0.2 µm) maximum	16 µin (0.4 µm) maximum

Water, Hydraulic Oil, Crude Oil, Sealants		
Material	**Dynamic Surface**	**Static Surface**
Thermoplastic & Rubber Seals	3 to 12 µin (0.08 to 0.3 µm)	32 µin (0.8 µm) maximum
PTFE Seals	12 µin (0.3 µm) maximum	32 µin (0.8 µm) maximum

Rp GUIDELINES

All Media & Fluids		
Material	**Dynamic Surface**	**Static Surface**
Thermoplastic & Rubber Seals	If Ra ≥ 5 µin (0.13 µm), then Rp ≤ 3 x Ra If Ra < 5 µin (0.13 µm), then Rp ≤ 3.5 x Ra	—
PTFE Seals	If Ra ≥ 5 µin (0.13 µm), then Rp ≤ 3 x Ra If Ra < 5 µin (0.13 µm), then Rp ≤ 3.5 x Ra	—
Example: If Ra = 6 µin, then Rp ≤ 18 µin		

Rz GUIDELINES

All Media & Fluids		
Material	**Dynamic Surface**	**Static Surface**
Thermoplastic & Rubber Seals	Rz ≤ 8 x Ra and 70 µin (1.8 µm) maximum	Rz ≤ 6 x Ra
PTFE Seals	Rz ≤ 8 x Ra and 64 µin (1.6 µm) maximum	Rz ≤ 6 x Ra
Example: If Ra = 6 µin, then Rz ≤ 48 µin (dynamic calculation) Rz values above maximum recommendations (70 µin) will increase seal wear rate.		

Rmr GUIDELINES

All Media & Fluids		
Material	**Dynamic Surface**	**Static Surface**
Thermoplastic & Rubber Seals	45% to 70% (thermoplastic)	—
PTFE Seals	55% to 85% (rubber materials)	—
Based upon a zero reference level of 5% material/bearing, Rmr will be measured at 25% of the Rz value.		

SURFACE FINISH FAQ'S

Surface finish is one of the most important factors in seal function and longevity. There is a limited range of finish quality in which any seal can work reliably. In typical liquid sealing applications there needs to be 'tooth' in the surface with the just the right height difference between peaks and valleys. The fine grooves left by surface finishing methods act as a lubricant reservoir which forms a film on which a seal rides, significantly reducing friction. A surface that is too fine lacks the reservoir capacity and cannot form a stable film, leading to a high friction, dry running condition that causes excessive wear and reduces seal longevity. A surface finish that is too rough forms high pressure regions on the peaks that break the film, causing excess wear. An extremely rough surface simply abrades the seal away, damaging the sealing edge and potentially generating leak paths around the seal. Systems that are required to run dry require finer surface finishes as they ride directly on the metal

R_a, or average roughness, is the most common method of measuring roughness and is the standard used by MFP Seals ($R_a \mu in.$). Described in ASME B46.1, it is the mean distance from the mean height of surface defects over the inspection length ($R_a = \frac{1}{l_r}\int_0^{l_r} |z(x)|\, dx$; where l_r is the length of inspection and $z(x)$ is the profile curve). It is a fast and convenient way to determine the quality of a surface. This method does have two major drawbacks. As an average, different surface profiles can read the same and high magnitude outliers have a minimal effect on the overall value (shown in Fig 1.).

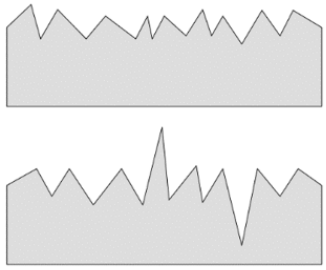

Fig 1. Example of two profiles that have the same R_a
Note the large peak and valley on the second surface

R_q, or quadratic average, is similar to R_a in that it is a continuous function over the measurement length. Described in ASME B46.1, it is the square root of the average of squared distances from the mean height of surface defects over the inspection length.

$$\left(R_q = \sqrt{\frac{1}{l_r}\int_0^{l_r} z(x)^2 dx} \right)$$

R_z, or mean roughness depth, is the difference between peak and valley over a sample, then averaged over several samples to form a conclusion ($R_z = \frac{\sum_{i=1}^{n} R_{z_i}}{n}$; Where $R_{z_i} = \max z(x) + |\min z(x)|$ and n is number of samples). The advantage of R_z is measuring the outliers which gives information about the performance at the rough end, which can be used to identify if a seal may experience excess wear.

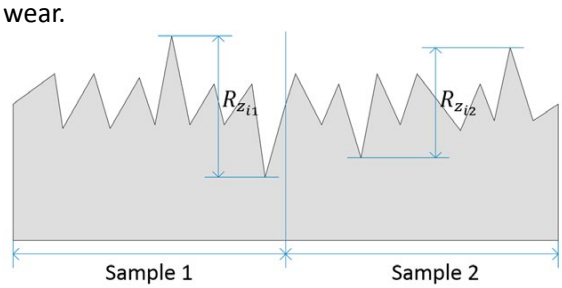

Fig 2. Visual representation of R_z

There are 2 more adaptations of R_z. There is $R_{z_{DIN}}$ which use the average of an equal sample of both, the highest peaks and lowest valleys in each sample length as R_{Z_i}. There is also $R_{z_{JIS}}$ which is the Japanese Industrial Standard, this method uses the 5 highest compared against the 5 lowest over a sample length. The major downside of any R_z method is that they cannot be used to identify if a surface is too smooth.

Avoid using R_a to R_z conversions found online, as the measurements rely on fundamentally different data.

ROD SEAL INSTALLATION INSTRUCTIONS

Installing Rod Seals into a Gland

Care must be taken when installing seals to ensure that the seal is not nicked, dented, scratched, or cut. Most soft rubber or plastic seals can be installed by hand and do not require additional tools. To install soft seals, the seal can be folded, by hand (see Figure SI-1), and installed inside the seal groove in the gland.

Always be sure to check the cylinder bore and gland (grooves) before performing an installation. Ensure that the components are clean and free of burrs or sharp edges. Remove any contamination, chamfer, radius, and deburr, as needed. Refer to the Cross Section vs. Diameter instructions on page 6 before proceeding with any seal installation.

For less pliable seals, heating of the seal, and the use of installation tools may be necessary. Using a media compatible with the seal, such as hot water, oil, or air, gently heat the seal, allowing it to be more easily folded and installed into the groove. Be careful not to exceed the normal operating temperature for the seal materials.

For stiffer seal materials, such as higher durometer Urethane and rubber an installation tool can be used (see Figure SI-2). Special care must be taken not to dent or otherwise damage the seal with a metal or hard plastic installation tool. Do not allow the installation tool to push against any primary sealing lip on the seal to be installed. If the seal has an integrated Anti-Extrusion, or Buffer Ring, it should be removed before folding the seal with the installation tool, and replaced after the installation of the main seal is completed. Be sure to check your installation tools for burrs, sharp corners, or flaking metal coatings that could damage the seal during installation.

If you are installing a 2 Piece Rod Seal, or Buffer Ring, which utilizes an energizing Square or O-ring, install the energizer into the groove first. After properly seating the energizer, install the rod seal by carefully folding it into a kidney bean shape and guiding it into the groove (see Figure SI-1). Seals with snap-in energizers, such as O-Pac® or X-Pac® seals may be folded with the O-Ring or X-Ring energizer in place.

After the seal is folded, either manually or with a tool, place the seal in the gland groove and release the seal. Slowly work the seal into the groove and help it unfold. Work your way around the seal to ensure it is properly seated in the groove. Insert any Anti-Extrusion or Back-up rings at this time.

For PTFE seals, a Re-sizing Tool can be used to help expand the seal into the groove (Figure SI-3). Refer to the tool manufacturers instructions for proper use.

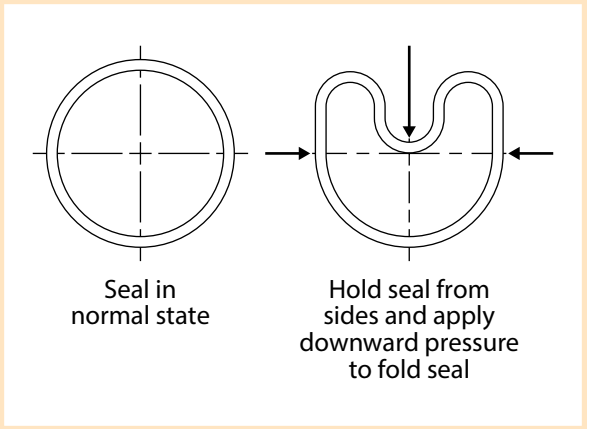

Figure SI-1 - Manual soft seal folding, for installation into a gland.

Figure SI-2 - An X-PAC® U-Cup, being folded using an installation tool.

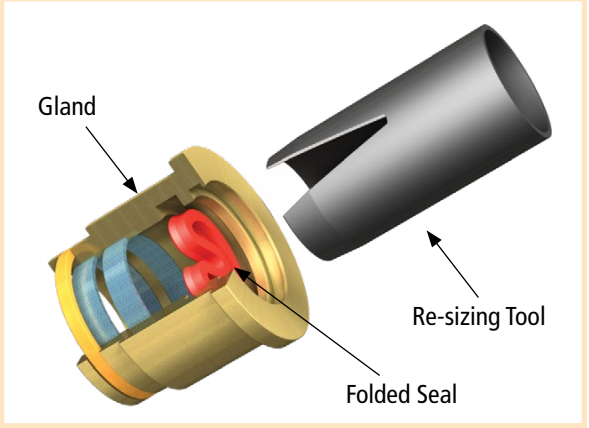

Figure SI-3 - Cut-away diagram showing an X-PAC® U-Cup, folded and positioned to fit into the groove.

PISTON SEAL INSTALLATION INSTRUCTIONS

STEP ONE

Heat the piston seal up to 80°C – 100°C (175°F – 212°F) by using a compatible medium, such as, hot water, oil or air. This will make the installation easier by allowing the seal to expand, while guiding it into the groove, using an installation tool.

Softer, more pliable seal materials, may not require heating.

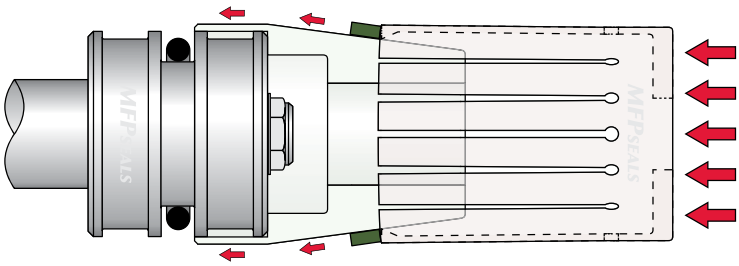

*NOTE: When handling heated seals, care must be taken to prevent burns.

STEP TWO

With the aid of an Installation Cone and Expanding Installation Sleeve*, slide the seal in place with one push. The Installation Cone covers any grooves that may otherwise cause damage to the seal during installation.

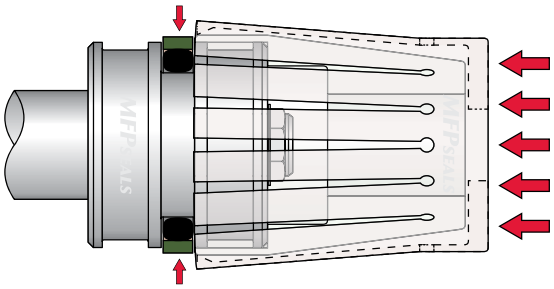

*NOTE: These Installation tools should be made from Nylon or Acetal, materials with low friction. They should be machined with a smooth finish to avoid damage to the seals.[1]

STEP THREE

Remove the installation sleeve and cone, once the seal is set in place. A sizing sleeve (the original cylinder) with lead in chamfers can be used to force the seal to seat in the groove and assist with the shrinking/ sizing process. A tool such as a Seal Constrictor can also be used to ensure proper sizing of the seal.

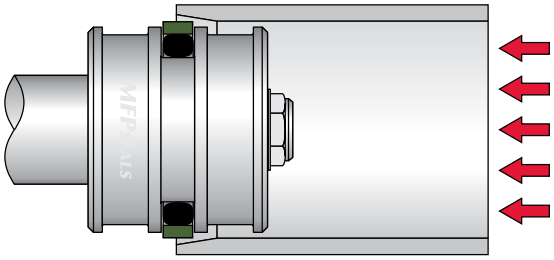

STEP FOUR

Wait until the seal resizes and returns to ambient temperature.

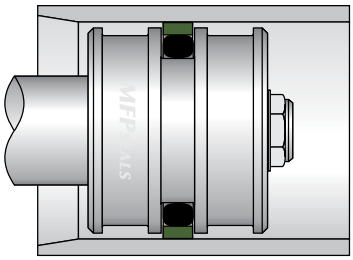

[1] MFP Seals can machine Installation Cones and Sleeves to fit your application.
Using these tools reduces installation time and protects the seal from damage during installation.

ISO Tolerance Chart

MFPSEALS
www.mfpseals.com

ISO TOLERANCE CHART (INCH)

Basic Diameter (in.)	f7	F7	f8	F8
above .236 to .394	-.0005"/-.0011"	+.0011"/+.0005"	-.0005"/-.0014"	+.0014"/+.0005"
above .394 to .709	-.0006"/-.0013"	+.0013"/+.0006"	-.0006"/-.0017"	+.0017"/+.0006"
above .709 to 1.181	-.0008"/-.0016"	+.0016"/+.0008"	-.0008"/-.0021"	+.0021"/+.0008"
above 1.181 to 1.969	-.0010"/-.0020"	+.0020"/+.0010"	-.0010"/-.0025"	+.0025"/+.0010"
above 1.969 to 3.150	-.0012"/-.0024"	+.0024"/+.0012"	-.0012"/-.0030"	+.0030"/+.0012"
above 3.150 to 4.724	-.0014"/-.0028"	+.0028"/+.0014"	-.0014"/-.0035"	+.0035"/+.0014"
above 4.724 to 7.087	-.0017"/-.0033"	+.0033"/+.0017"	-.0017"/-.0042"	+.0042"/+.0017"
above 7.087 to 9.843	-.0020"/-.0038"	+.0038"/+.0020"	-.0020"/-.0048"	+.0048"/+.0020"
above 9.843 to 12.402	-.0022"/-.0043"	+.0043"/+.0022"	-.0022"/-.0054"	+.0054"/+.0022"
above 12.402 to 15.748	-.0024"/-.0047"	+.0047"/+.0024"	-.0024"/-.0059"	+.0059"/+.0024"
above 15.748 to 19.685	-.0027"/-.0052"	+.0052"/+.0027"	-.0027"/-.0065"	+.0065"/+.0027"
above 19.685 to 24.803	-.0030"/-.0057"	+.0057"/+.0030"	-.0030"/-.0073"	+.0073"/+.0030"
above 24.803 to 31.496	-.0032"/-.0063"	+.0063"/+.0032"	-.0032"/-.0081"	+.0081"/+.0032"
above 31.496 to 39.370	-.0034"/-.0069"	+.0069"/+.0034"	-.0034"/-.0089"	+.0089"/+.0034"
above 39.370 to 49.213	-.0039"/-.0080"	+.0080"/+.0039"	-.0039"/-.0104"	+.0104"/+.0039"
above 49.213 to 62.992	-.0043"/-.0093"	+.0093"/+.0043"	-.0043"/-.0120"	+.0120"/+.0043"

Basic Diameter (in.)	H8	h9	H9
above .236 to .394	+.0009"/-.000"	+.000"/-.0014"	+.0014"/-.000"
above .394 to .709	+.0011"/-.000"	+.000"/-.0017"	+.0017"/-.000"
above .709 to 1.181	+.0013"/-.000"	+.000"/-.0020"	+.0020"/-.000"
above 1.181 to 1.969	+.0015"/-.000"	+.000"/-.0024"	+.0024"/-.000"
above 1.969 to 3.150	+.0018"/-.000"	+.000"/-.0029"	+.0029"/-.000"
above 3.150 to 4.724	+.0021"/-.000"	+.000"/-.0034"	+.0034"/-.000"
above 4.724 to 7.087	+.0025"/-.000"	+.000"/-.0039"	+.0039"/-.000"
above 7.087 to 9.843	+.0028"/-.000"	+.000"/-.0045"	+.0045"/-.000"
above 9.843 to 12.402	+.0032"/-.000"	+.000"/-.0051"	+.0051"/-.000"
above 12.402 to 15.748	+.0035"/-.000"	+.000"/-.0055"	+.0055"/-.000"
above 15.748 to 19.685	+.0038"/-.000"	+.000"/-.0061"	+.0061"/-.000"
above 19.685 to 24.803	+.0043"/-.000"	+.000"/-.0069"	+.0069"/-.000"
above 24.803 to 31.496	+.0049"/-.000"	+.000"/-.0079"	+.0079"/-.000"
above 31.496 to 39.370	+.0055"/-.000"	+.000"/-.0091"	+.0091"/-.000"
above 39.370 to 49.213	+.0065"/-.000"	+.000"/-.0102"	+.0102"/-.000"
above 49.213 to 62.992	+.0077"/-.000"	+.000"/-.0122"	+.0122"/-.000"

ISO TOLERANCE CHART (METRIC)

Basic Diameter (mm)	f7	F7	f8	F8
above 6 to 10	-.013/-.028	+.028/+.013	-.013/-.035	+.035/+.013
above 10 to 18	-.016/-.034	+.034/+.016	-.016/-.043	+.043/+.016
above 18 to 30	-.020/-.041	+.041/+.020	-.020/-.053	+.053/+.020
above 30 to 50	-.025/-.050	+.050/+.025	-.025/-.064	+.064/+.025
above 50 to 80	-.030/-.060	+.060/+.030	-.030/-.076	+.076/+.030
above 80 to 120	-.036/-.071	+.071/+.036	-.036/-.090	+.090/+.036
above 120 to 180	-.043/-.083	+.083/+.043	-.043/-.106	+.106/+.043
above 180 to 250	-.050/-.096	+.096/+.050	-.050/-.122	+.122/+.050
above 250 to 315	-.056/-.108	+.108/+.056	-.056/-.137	+.137/+.056
above 315 to 400	-.062/-.119	+.119/+.062	-.062/-.151	+.151/+.062
above 400 to 500	-.068/-.131	+.131/+.068	-.068/-.165	+.165/+.068
above 500 to 630	-.076/-.146	+.146/+.076	-.076/-.186	+.186/+.076
above 630 to 800	-.080/-.160	+.160/+.080	-.080/-.205	+.205/+.080
above 800 to 1000	-.086/-.176	+.176/+.086	-.086/-.226	+.226/+.086
above 1000 to 1250	-.098/-.203	+.203/+.098	-.098/-.263	+.263/+.098
above 1250 to 1600	-.110/-.235	+.235/+.110	-.110/-.305	+.305/+.110

Basic Diameter (mm)	H8	h9	H9
above 6 to 10	+.022/-.000	+.000/-.036	+.036/-.000
above 10 to 18	+.027/-.000	+.000/-.043	+.043/-.000
above 18 to 30	+.033/-.000	+.000/-.052	+.052/-.000
above 30 to 50	+.039/-.000	+.000/-.062	+.062/-.000
above 50 to 80	+.046/-.000	+.000/-.074	+.074/-.000
above 80 to 120	+.054/-.000	+.000/-.087	+.087/-.000
above 120 to 180	+.063/-.000	+.000/-.100	+.100/-.000
above 180 to 250	+.072/-.000	+.000/-.115	+.115/-.000
above 250 to 315	+.081/-.000	+.000/-.130	+.130/-.000
above 315 to 400	+.089/-.000	+.000/-.140	+.140/-.000
above 400 to 500	+.097/-.000	+.000/-.155	+.155/-.000
above 500 to 630	+.110/-.000	+.000/-.175	+.175/-.000
above 630 to 800	+.125/-.000	+.000/-.200	+.200/-.000
above 800 to 1000	+.140/-.000	+.000/-.230	+.230/-.000
above 1000 to 1250	+.165/-.000	+.000/-.260	+.260/-.000
above 1250 to 1600	+.195/-.000	+.000/-.310	+.310/-.000

Elastomer Seal Storage - ARP5316D

Temperature	Seals made from polymers should be stored at temperatures below 100°F (38°C). Temporary climate changes resulting in higher temperatures are acceptable. Store polymers away from direct heat sources (i.e., radiators, boilers, direct sunlight). Be careful when handling stored polymer products at temperatures below 59°F (15°C). The polymers may have become rigid and may be prone to distortion if handled incorrectly. Any polymer products stored below 59°F (15°C) must be raised to a core temperature of 68°F (20°C) before installation.
Humidity	The relative humidity of the storage area should be at a level that given temperature fluctuations, condensation doesn't occur. If seals are being stored exposed, not in sealed air-tight bags, the storage area should have, for elastomers, less than 75% relative humidity, and for polyurethane seals, less than 65% relative humidity.
Light	All polymer products should be shielded from light sources, especially direct sunlight and bright artificial light which includes ultraviolet wavelengths. Opaque storage bags are best, for protection from light.
Ozone	Ozone is particularly harmful to elastomers. Store seals made from elastomers in rooms without sources of ozone production, such as, mercury vapor lamps, and high-voltage electrical equipment with electrical discharge. Combustible gases and organic vapors can also attribute to ozone production through a photochemical process and should not be present in the storage area.
Deformation	Seals should be stored in a manner that does not put any undue stress or pressure on the seals that could cause distortion immediately or over time. Do not store seals hanging from a hook as gravity will distort the seal over time. Do not place heavy objects on top of any stored seals. Always store seals in our original packaging in a stress-free manner. Larger diameter rings without rigid components can be turned into two or three smaller diameter loose loops (avoid creasing or twisting) to accommodate smaller storage areas.
Liquid Contact	Seals made from elastomers should not come into contact with any liquid or semi-solids, or vapors, of gasoline, greases, acids, cleaning, or similar fluids unless such fluids are part of the seals' design or manufacturer's packaging. Seals received in manufacturer's packaging, coated in such fluid or grease, should be stored as received by the manufacturer.
Metal Contact	Seals made from elastomers can be affected by contact with metals and alloys, such as, copper, manganese, and iron. These seals should not be stored where there can be contact with any of these metals (except in cases where the metal is part of the seal or component's design), and in such cases should be individually packaged.
Elastomer Contact	Seals made from dissimilar compounds should not be stored or packaged together, unless done so by the seal manufacturer. Contact between seals made from dissimilar compounds should be avoided.
Stock Rotation	Seal stock should be used in a First-In, First-Out manner (FIFO), older stock before newer. This ensures that the next seal used in the rotation will be well within its intended shelf life.

Polymer Shelf Life - ARP5316D

Compound Name	ASTM Polymer	Shelf Life
Aflas®	FEPM	Unlimited
Butyl Rubber, Isobutylene Isoprene	IIR	Unlimited
Chloroprene (Neoprene®)	CR	15 Years
Chlorosulphonated Polyethylene (Hypalon®)	CSM	15 Years
Epichlorohydrin (Hydrin®)	ECO	NA
Ethylene Acrylic (Vamac®)	AEM	15 Years
Ethylene Propylene, EPDM or EP	EP	Unlimited
Fluorocarbon (Viton®)	FKM	Unlimited
Fluorosilicone	FVMQ	Unlimited
Hydrogenated Nitrile, HNBR or HSN	HNBR	15 Years
Nitrile (Buna-N or NBR)	NBR	15 Years
Perfluoroelastomer	FFKM	Unlimited
Polyacrylate	ACM	15 Years
Polyurethane (Polyester or Polyether)	AU / EU	5 Years
Silicone	Q, VMQ, PVMQ	Unlimited
Styrene Butadiene (Buna-S)	SBR	3 Years

Hypalon®, Aflas®, Neoprene®, Hydrin®, Vamac®, and Viton® are registered trademarks of their respective companies.

The term "Unlimited" can be equated to 25 years according to some organizations.

Seal Failure Examples

MFP SEALS
www.mfpseals.com

DETERIORATION

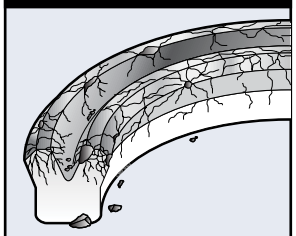

IDENTIFICATION

The seal has lost all elasticity, is cracked and easily crumbles.

CONDITION

Excessive fluid temperature. Prolonged exposure to sunlight or ozone.

RESOLUTION

Reduce oil temperature. Check that seals are stored away from sources of ozone (electrical) and direct sunlight.

EXTRUSION

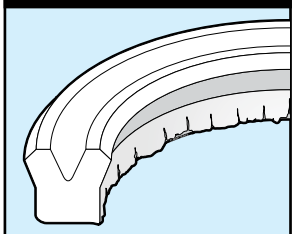

IDENTIFICATION

The dynamic side heal shows signs of extrusion.

CONDITION

Excessive gaps in mated surfaces (extrusion gaps). Worn bearings/wear rings. Excessive system pressure.

RESOLUTION

Use a backup ring. Inspect and replace worn bearings or wear rings. Call MFP Seals to find a seal designed for this application.

EXTRUSION

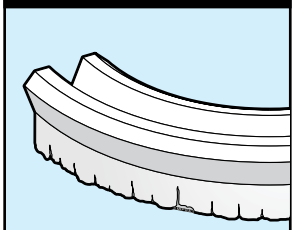

IDENTIFICATION

The static side heal shows signs of extrusion.

CONDITION

Support surface is uneven. Backup ring used is the wrong size.

RESOLUTION

Check surfaces and machine to spec. Use correct size backup ring.

GROOVING

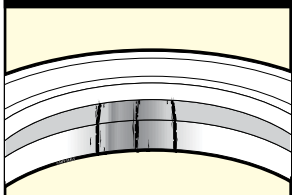

IDENTIFICATION

The dynamic lip shows signs of axial cuts and grooves.

CONDITION

Sharp foreign matter is present in the system fluid. May also be caused by imploding air bubbles.

RESOLUTION

Bleed air from system and/or flush system of contaminants.

FRACTURING

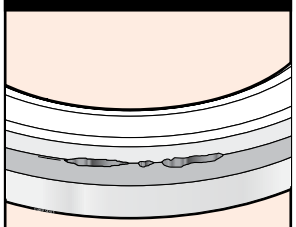

IDENTIFICATION

The dynamic side of the seal has missing material.

CONDITION

Excessive back pressure.

RESOLUTION

Inspect pressure relief valves.

FRACTURING

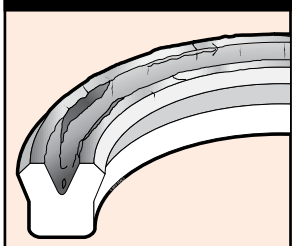

IDENTIFICATION

The pressurized surfaces of the seal are burned or broken.

CONDITION

Dieseling, or an explosion of residual air at high pressure, may have occurred.

RESOLUTION

Inspect maximum pressure settings. Bleed air from system.

FRACTURING

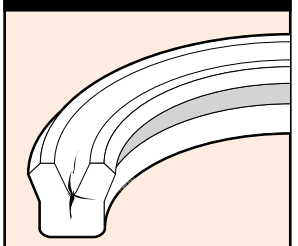

IDENTIFICATION

The V portion of the seal shows long cracks or splits.

CONDITION

Temperature too low at startup. Frequent shock from excessive pressure spikes.

RESOLUTION

Increase startup temp.

Call MFP Seals to find a seal designed for this application.

FRACTURING

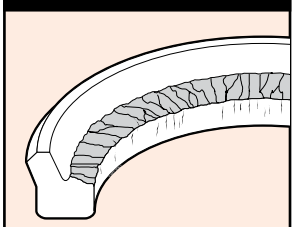

IDENTIFICATION

The dynamic side of the seal has broken off.

CONDITION

Material and/or fluid break-down.

RESOLUTION

Replace fluid.

Call MFP Seals to find a seal designed for this application.

MFPSEALS®
www.mfpseals.com

Seal Failure Examples

HARDENING

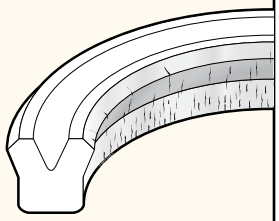

IDENTIFICATION

The dynamic face of the seal is hardened, showing cracks and glazing of the seal material.

CONDITION

High stroke speed generating excessive heat.

RESOLUTION

Reduce stroke speed, or use a material designed for speed and heat requirements.

MFP Seals can help!

HARDENING

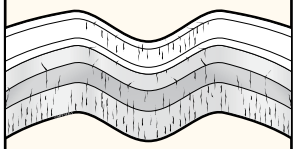

IDENTIFICATION

The entire seal is hardened, showing cracks and glazing, with loss of material elasticity.

CONDITION

Excessive fluid temperature. Fluid break-down. Incompatible fluid for seal material used.

RESOLUTION

Reduce Oil Temp. Replace Fluid. Use fluid compatible to seal material.

SCARRING

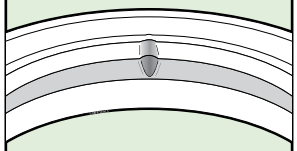

IDENTIFICATION

The lip is cut or dented.

CONDITION

Damaged from use of improper installation tool or storage of seal on a peg or nail.

RESOLUTION

Store seals in plastic bags enclosed in a cardboard box. Inspect installation tools and make sure they have smooth edges.

SCARRING

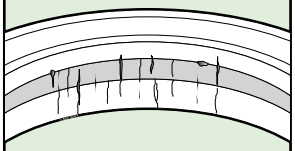

IDENTIFICATION

The dynamic side of the seal shows excessive scratches.

CONDITION

Damage to the Rod or Cylinder Bore. Foreign material present in the fluid.

RESOLUTION

Hone, polish, or deburr rod and cylinder. Flush system of contaminants.

SWELLING

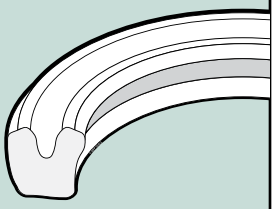

IDENTIFICATION

Seal material has become softened and misshapen.

CONDITION

Fluid has been absorbed by the seal material. Incompatible fluid or water in fluid.

RESOLUTION

Use fluid compatible to seal material. Flush system of contaminants.

MFP Seals can help!

WEAR

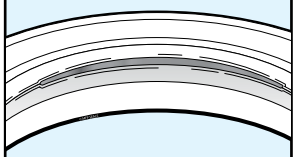

IDENTIFICATION

Only one side of the dynamic lip is showing excessive wear.

CONDITION

Excessive lateral load caused by worn wear ring or bearing.

RESOLUTION

Inspect and replace worn bearings or wear rings. Bearing/Wear Ring surface area may need to be increased.

WEAR

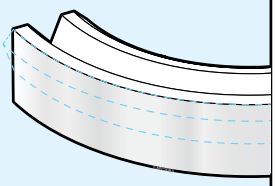

IDENTIFICATION

The dynamic face of the seal is worn to a glossy mirror like shine.

CONDITION

Not enough lubrication.

RESOLUTION

Check viscosity of oil.

Call MFP Seals to find a seal designed for this application.

WEAR

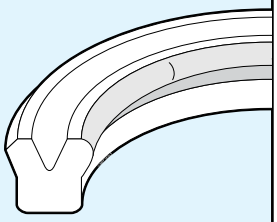

IDENTIFICATION

The dynamic lip is worn to a rounded, egg-shape.

CONDITION

The rod and cylinder bore are off-center, non-concentric.

RESOLUTION

Check for, and replace, worn rod or cylinder. Machine to seal specifications.

RETURN TO INDEX

Custom Machined Seals

A product of MFP Seals.

MFPSEALS®
www.mfpseals.com

MFP Seals can produce custom machined products, made to print, or from the industry standard geometries shown below. We can also reverse engineer your sample. For more information and assistance with material selection, contact the MFP Seals Engineering Department. We can assist in recommending the proper material for your application and environment. Not all profiles are available in all materials. Need something other than seals? Ask us about custom shapes and plastic part manufacturing.

ID

ENGINEERING GUIDELINES

BACK-UP RING

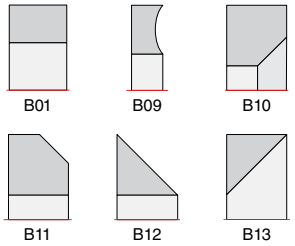

GASKET

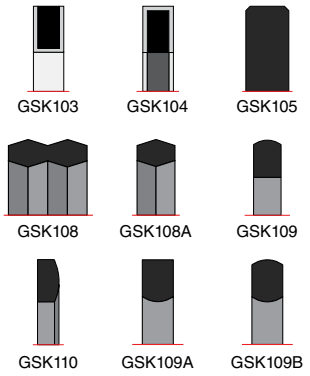

GUIDE RING

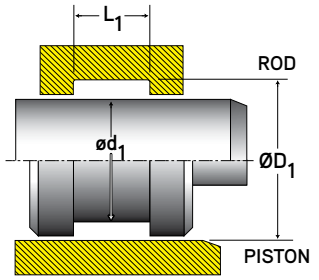

( ) Rod / Piston
(L1) Groove Width

(ØD1) Groove O.D. / Bore
(ød1) Rod O.D. / Groove I.D.

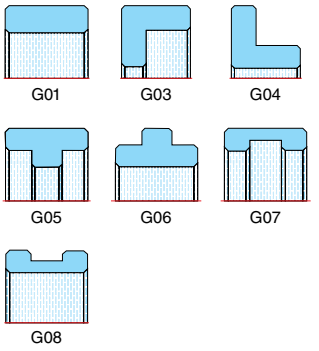

ROTARY SHAFT SEAL

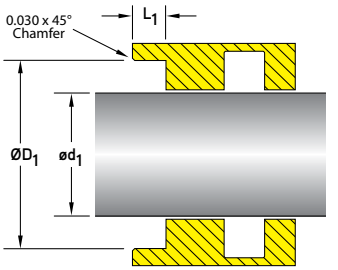

(ØD1) Groove O.D. (ød1) Rod O.D.
(L1) Groove Width

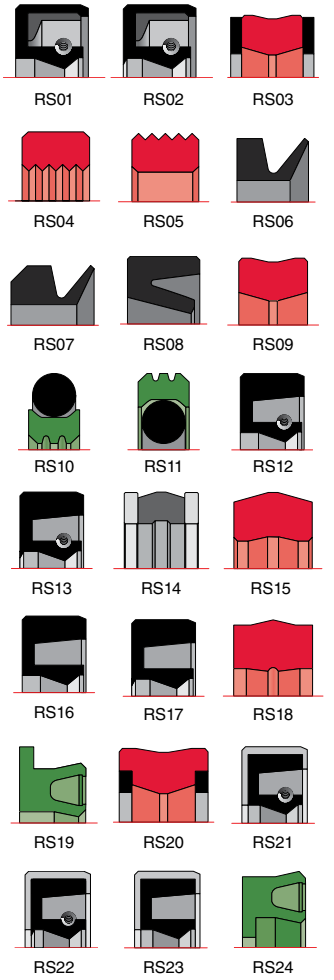

WIPER

(ØD1) Groove O.D. (ød1) Rod O.D.
(ød2) Throat (L1) Groove Width

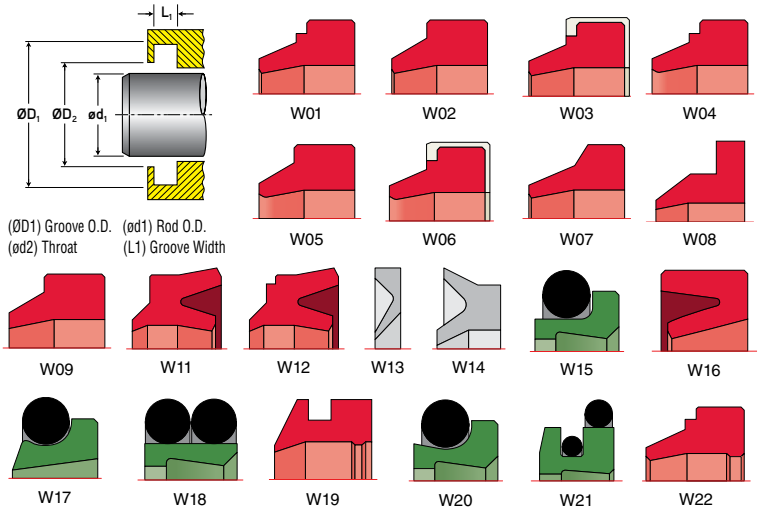

CUSTOM MACHINED SEALS UP TO 4000MM (157-1/2")

Please refer to page 20, Seal Compounds, for material selection or contact the MFP Seals Engineering Department. We can assist in recommending the proper material for use in your application. Not all profiles are available in all materials.

PISTON SEAL

(ØD1) Bore
(ød1) Groove I.D.
(ØD2) Piston O.D.
(L1) Groove Width

(ØD1) Bore
(ØD3) Wear Ring I.D.
(L1) Groove Width
(ØD2) Piston O.D.
(ød1) Groove I.D.
(L2) Wear Ring Width

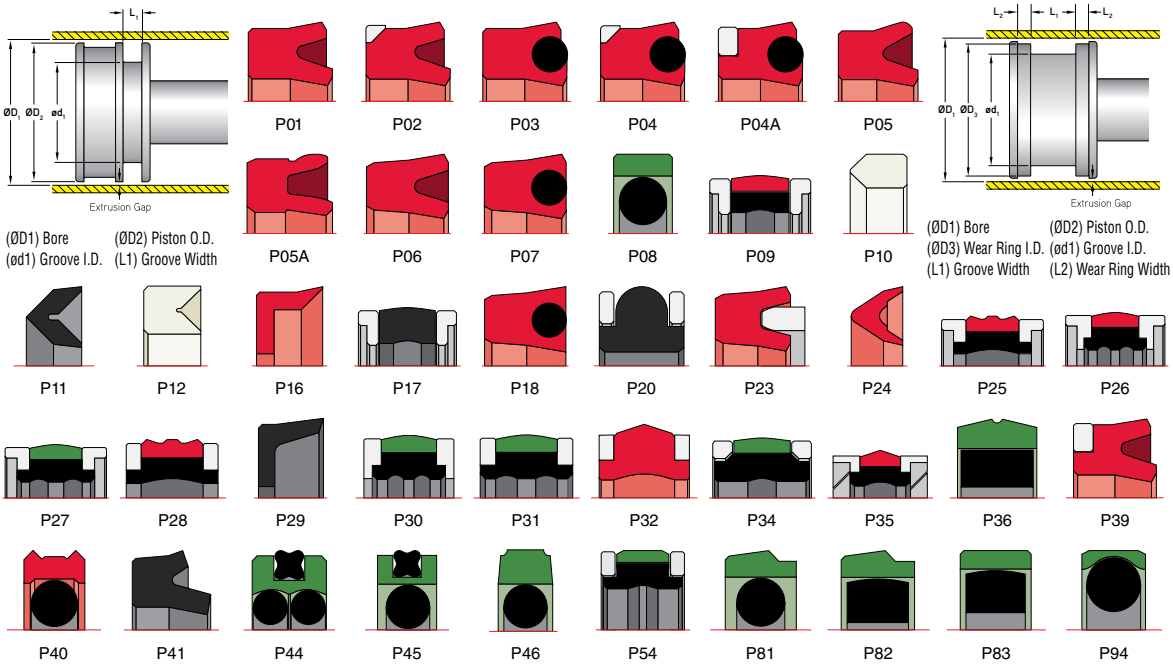

ROD SEAL

(ØD1) Groove O.D.
(ød2) Throat
(ød1) Rod O.D.
(L1) Groove Width

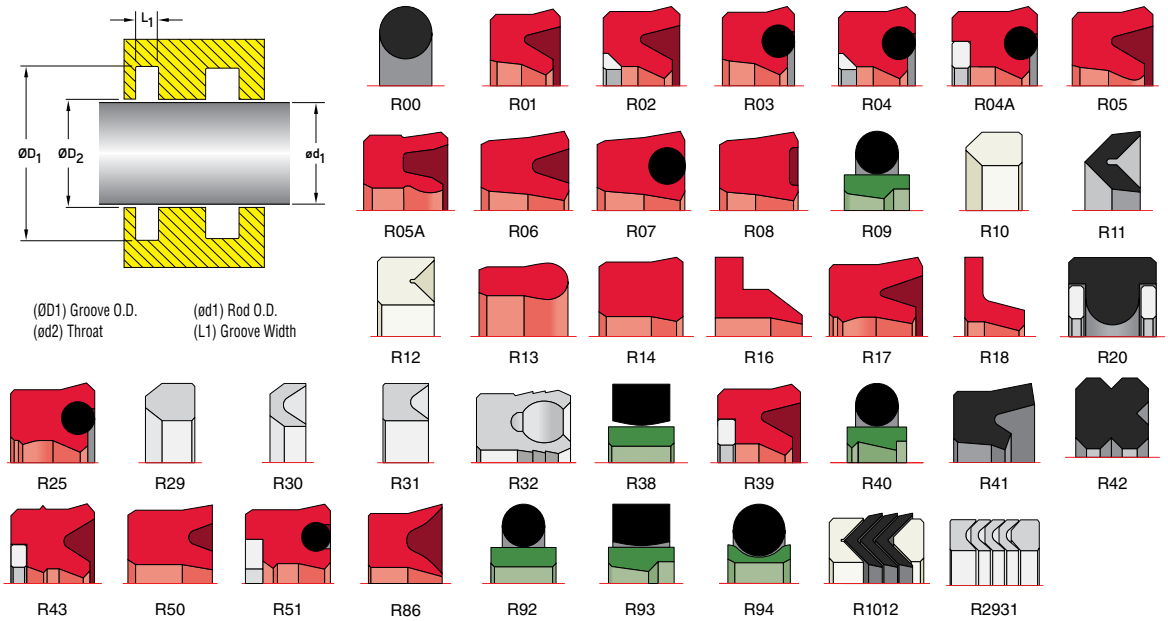

Seal Compounds

MFPSEALS®
www.mfpseals.com

Compound Name	Abbreviation	Hardness	Material Group	Color
C1000	COM	105 HRM	Composite	Tan
C1025	COM	97 HRM	Composite	Black
C1400	COM	100 HRM	Composite	Turquoise
C2000	COM	115 HRM	Composite	Gray
C2025	COM	100 HRM	Composite	Gray
C4000	COM	98 HRM	Composite	Turquoise
C4001	COM	98 HRM	Composite	White
C4025	COM	98 HRM	Composite	Gray
E7101	EPDM	70 Shore A	Rubber	Black
E7102	EPDM	80 Shore A	Rubber	Black
E7103	EPDM	70 Shore A	Rubber	Black
E7105	EPDM	70 Shore A	Rubber	Black
E7106	EPDM	80 Shore A	Rubber	Black
FC7500 - Fluorochem®	FKME	75 Shore A	Fluoroelastomer	Black
FC7510 - Fluorochem®	FKM	75 Shore A	Fluoroelastomer	Black
FC7525 - Fluorochem®	FFKM	75 Shore A	Perfluoroelastomer	Black
FC7550 - Fluorochem®	FFKM	75 Shore A	Perfluoroelastomer	White

Hytrel® and Viton® are registered trademarks of E. I. du Pont de Nemours and Company for its brand of thermoplastic polyester elastomer.
Fluorochem® (2012) and Ultraflex® (2011) are registered trademarks of Martin Fluid Power, Inc. Disogrin® is a trademark of Freudenberg-NOK General Partnership.

General Description	Test Method	Temperature Range
Fine weave cotton fabric-reinforced phenolic composites.		-40°C to +130°C -40°F to +266°F
Fine weave cotton fabric-reinforced phenolic composite w/graphite additives for reduce friction.		-40°C to +130°C -40°F to +266°F
Synthetic fabric impregnated composite with thermoset resin.		-40°C to +120°C -40°F to +248°F
Woven aramid fabric reinforced phenolic composite with graphite additions.		-40°C to +200°C -40°F to +392°F *Intermittent Exposure +220°C (+428°F)
Woven aramid fabric reinforced high-temperature resin composite with graphite and another proprietary lubricant added.		-40°C to +204°C -40°F to +400°F
Synthetic fiber-reinforced polyester composites w/PTFE micro-powder additions.		-40°C to +120°C -40°F to +248°F
Synthetic fiber-reinforced polyester composites w/PTFE micro-powder additions.		-40°C to +120°C -40°F to +248°F
Synthetic fiber-reinforced polyester composites w/graphite additives for reduce friction.		-40°C to +120°C -40°F to +248°F
Ethylene Propylene Diene Monomer	ASTM D2000 M4AA710 A13 B13 C12 EA14 F17	-50°C to +100°C -58°F to +212°F
Ethylene Propylene Diene Monomer	ASTM D2000 M4BA810 A14 B13 C12 EA14	-50°C to +100°C -58°F to +212°F
Ethylene Propylene Diene Monomer NSF-61 Certified	ASTM D2000 M4AA710 A13 B13 C12 EA14 F17 Z1:NSF61	-50°C to +100°C -58°F to +212°F
Ethylene Propylene Diene Monomer WRAS / NSF61 Certified	ASTM D2000 M3DA710 A26 B36 C32 EA14 F19	-50°C to +150°C -58°F to +302°F
Ethylene Propylene Diene Monomer NAS1613 Rev. 2 (High density phosphate ester hydraulic systems)		-56°C to +121°C -70°F to +250°F
Extreme chemical resistant fluorocarbon.	ASTM D2000 M3HK814 B38 EF31 Z1=75±5 Shore A Durometer	-22°C to +250°C -7°F to +482°F
High purity, abrasion resistant fluoroelastomer.		-20°C to +200°C -4°F to +392°F
Peroxide-cured FFKM designed for use in AMS 7257C aerospace applications, chemical processing and applications requiring excellent thermal resistance.	AMS 7257 Rev. D	-15°C to +320°C +5°F to +608°F
High purity, low compression set, excellent heat and chemical resistance.	AMS 7257 Rev. D	-15°C to +320°C +5°F to +608°F

This information is only to be used as a guide to selection of seal materials.
Application, as well as temperature, pressures, media, and finishes should all be considered when choosing seal materials.

Seal Compounds

MFPSEALS®
www.mfpseals.com

Compound Name	Abbreviation	Hardness	Material Group	Color
FC7575 - Fluorochem®	FFKM	90 Shore A	Perfluoroelastomer	Black
FC7600 - Fluorochem®	FFKM	90 Shore A	Perfluoroelastomer	Black
FC7625 - Fluorochem®	FFKM	90 Shore A	Perfluoroelastomer	Black
FC7650 - Fluorochem®	FFKM	70 Shore A	Perfluoroelastomer	Black
FC7675 - Fluorochem®	FFKM	75 Shore A	Perfluoroelastomer	Black
FC7700 - Fluorochem®	FFKM	75 Shore A	Perfluoroelastomer	Black
FC7725 - Fluorochem®	FFKM	75 Shore A	Perfluoroelastomer	White
FC7750 - Fluorochem®	FFKM	75 Shore A	Perfluoroelastomer	Black
FC7775 - Fluorochem®	FFKM	75 Shore A	Perfluoroelastomer	Black
FC7800 - Fluorochem®	FFKM	75 Shore A	Perfluoroelastomer	Black
FS7101	FVMQ	70 Shore A	Fluorosilicone	Blue
H2140 - Hytrel®	TPE	40 Shore D	Thermoplastic Polyester Elastomer	Orange
H2155 - Hytrel®	TPE	55 Shore D	Thermoplastic Polyester Elastomer	Orange
M1000	PEEK™	87 Shore D	Engineered Plastic	Tan
M1001	POM	82 Shore D	Engineered Plastic	Black

Hytrel® and Viton® are registered trademarks of E. I. du Pont de Nemours and Company for its brand of thermoplastic polyester elastomer.
Fluorochem® (2012) and Ultraflex® (2011) are registered trademarks of Martin Fluid Power, Inc. Disogrin® is a trademark of Freudenberg-NOK General Partnership.

General Description	Test Method	Temperature Range
Peroxide Cured Perfluoroelastomer	ASTM D2000 M1KK811 Z1 Z2 Z3 Z4 Z5 Z6 Z7 Z8 Z9 Z10	-15°C to +320°C +5°F to +608°F
Meets req. of NORSOK M710 [Rev. 2, Oct. 2001] in respect of rapid gas decompression resistance in 10 mol% carbon dioxide at 150 bar and 100°C.	ASTM D2000 KK914 NORSOK M710 [Rev. 2, Oct. 2001]	0°C to +260°C +32°F to +500°F
General purpose, compatible with Aliphatic & aromatic hydrocarbons, ketones and esters, strong acids & bases, amines & corrosion inhibitors.	ASTM D1418 NORSOK M710 [Rev. 2, Oct. 2001]	-4°C to +230°C +25°F to +446°F
General purpose Perfluoroelastomer.	ASTM D1418	-20°C to +230°C -4°F to +446°F
Certified to USP Class VI and is FDA compliant for food processing applications. Wide chemical resistance	ASTM D1418	-4°C to +230°C +25°F to +446°F
Broad chemical resistance. Perfluorinated Elastomer.	ASTM D1418	-7°C to +230°C +20°F to +446°F
Semiconductor: General Purpose. Certified to USP Class VI. Compatible with aggressive dry process chemistries including reactive plasmas. Excellent chemical and solvent resistance.	ASTM D1418	-7°C to +230°C +20°F to +446°F Excellent heat resistance to +220°C
General purpose perfluoroelastomer. High heat resistance.	ASTM D1418	-6°C to +300°C +21°F to +570°F
Outstanding chemical and solvent resistance including compatibility with Nitric Acid and amine chemicals. Excellent heat resistance.	ASTM D1418	-7°C to +230°C +20°F to +446°F Heat resistance up to +230°C
Outstanding chemical and solvent resistance including compatibility with Nitric Acid and amine chemicals. High temperature resistance up to +320°C. Low compression set. AMS 7257.	ASTM D1418	-5°C to +320°C +23°F to +608°F
Automotive and Aerospace applications Outstanding heat resistance, fluid resistance, and flexibility at extreme low temperature with good compression set properties. AMS R 25988 Class 1 Grade 70.	ASTM D2000 M2FK606A A19 EO36 EF31 F19 Z1 Z2	-60°C to +200°C -76°F to +392°F
Thermoplastic Polyester Elastomer.		-54°C to +135°C -65°F to +275°F
Thermoplastic Polyester Elastomer.		-54°C to +135°C -65°F to +275°F
Virgin Polyether Ether Ketone; strong, high ductility, chemically resistant, medical & FDA compliant applications.		-56°C to +250°C -70°F to +482°F
Acetal: Polyoxymethylene (POM) Excellent sliding and wear behavior.		-50°C to +100°C -58°F to +212°F

This information is only to be used as a guide to selection of seal materials.
Application, as well as temperature, pressures, media, and finishes should all be considered when choosing seal materials.

Seal Compounds

MFPSEALS®
www.mfpseals.com

Compound Name	Abbreviation	Hardness	Material Group	Color
M1002	Nylon	78 - 86 Shore D	Engineered Plastic	Blue-Gray
M1005	PA	90 HRM	Engineered Plastic	Charcoal Gray
M1006	UHMW-PE	61 Shore D	Engineered Plastic	Translucent White
M1007	PEEK™	87 Shore D	Engineered Plastic	Black
M1008	PEEK™	87 Shore D	Engineered Plastic	Natural
M1009	Fabric / NBR	N/A	Fabric & Rubber	Black
M1010	LDPE	40 Shore D	Low Density Polyethylene	Natural
M1011	PA	121 HRR	Lubricated Polyamide 66	Natural
M1012	PA	122 HRR	Polyamide 66 / Glass	Black
N6001	NBR	70 Shore A	Rubber	Black
N6003	NBR	90 Shore A	Rubber	Black
N6007	HNBR	70 Shore A	Rubber	Black
N6008	HNBR	80 Shore A	Rubber	Black
N6009	HNBR	90 Shore A	Rubber	Black
N6010	HNBR	70 Shore A	Rubber	Green
N6011	HNBR	80 Shore A	Rubber	Green
N6012	HNBR	90 Shore A	Rubber	Green
N6013	NBR	70 Shore A	Rubber	Black
N6014	NBR	70 Shore A	Rubber	Black
N6015	NBR	80 Shore A	Rubber	Black
N6017	NBR	70 Shore A	Rubber	Black

Hytrel® and Viton® are registered trademarks of E. I. du Pont de Nemours and Company for its brand of thermoplastic polyester elastomer.
Fluorochem® (2012) and Ultraflex® (2011) are registered trademarks of Martin Fluid Power, Inc. Disogrin® is a trademark of Freudenberg-NOK General Partnership.

General Description	Test Method	Temperature Range
Nylon 6 MoS_2 - dry lubricant-filled bearing material.	Resin (Typical): ASTM-D-4066 PA0110L01A00000 Shapes (Typical): ASTM-D-5989 S-PA0121	-53°C to +110°C -65°F to +230°F
40% Glass Reinforced Nylon.		-54°C to +135°C -65°F to +275°F
Ultra-High Molecular Weight Polyethylene		-265°C to +80°C -445°F to +176°F
Polyether Ether Ketone 30% Carbon Fiber Filled, FDA compliant.		-56°C to +250°C -70°F to +482°F
Polyether Ether Ketone 30% Glass Fiber Filled, FDA compliant.		-56°C to +250°C -70°F to +482°F
Fabric & Rubber	ASTM D2000 M6BG710 A1-10 B14 EO14 EO34	-30°C to +105°C -22°F to +221°F
US FDA 21CFR 177.1520 Compliant		-60°C to +80°C -76°F to +176°F
Lubricated Nylon 66.		-54°C to +135°C -65°F to +275°F
10% to 15% Glass Reinforced, heat stabilized polyamide 66 resin.		-54°C to +135°C -65°F to +275°F
Butadiene Acrylonitrile Copolymer. EO34 EF11 EF21 F17	ASTM D2000 M2BG714 A14 B14 EA14 EO14	-40°C to +100°C -40°F to +212°F
Butadiene Acrylonitrile Copolymer.	ASTM D2000 M2BG910 A14 B14 EA14 EF11 EF21 EO14 EO34	-20°C to +100°C -4°F to +212°F
Hydrogenated Nitrile Butadiene Rubber.	ASTM D2000 M3CH714 A25 B34 EO16 EO36 F17	-40°C to +125°C -40°F to +257°F
Butadiene Acrylonitrile Copolymer	ASTM D2000 M3DH810 A26 B16 EO16 EO36	-35°C to +150°C -31°F to +302°F
Butadiene Acrylonitrile Copolymer	ASTM D2000 M3DH920 A26 B16 C12 EO16 EO36	-30°C to +150°C -22°F to +302°F
Hydrogenated Nitrile Butadiene Rubber.	ASTM D2000 M4DH716 A26 B36 EO16 EO36 F17 Z1: GREEN	-40°C to +150°C -40°F to +302°F
Butadiene Acrylonitrile Copolymer	ASTM D2000 M2DH815 A26 B16 B36 EO16 EO36 F17	-25°C to +150°C -13°F to +302°F
Butadiene Acrylonitrile Copolymer	ASTM D2000 M3DH920 A26 B16 C12 EO16 EO36	-20°C to +150°C -4°F to +302°F
Butadiene Acrylonitrile Copolymer; Low Temp.	ASTM D2000 M5BG714 A14 B14 EO14 EO34 F19	-55°C to +100°C -67°F to +212°F
Butadiene Acrylonitrile Copolymer; UL Approved.	ASTM D2000 2BG714 A14 B34 EA14 EO14 EO34	-20°C to +120°C -4°F to +248°F
Butadiene Acrylonitrile Copolymer; Low Temp.	ASTM D2000 M6BG810 A14 B14 EO14 EO34	-40°C to +125°C -40°F to +257°F
Butadiene Acrylonitrile Copolymer.	ASTM D2000 M2BG714 A14 B14 EA14 EO14 EO34	-35°C to +100°C -31°F to +212°F

This information is only to be used as a guide to selection of seal materials.
Application, as well as temperature, pressures, media, and finishes should all be considered when choosing seal materials.

Compound Name	Abbreviation	Hardness	Material Group	Color
N6018	HNBR	80 Shore A	Rubber	Black
N6020	HNBR	75 Shore A	Rubber	Black
N6021	HNBR	80 Shore A	Rubber	Black
N6022	NBR	70 Shore A	Rubber	Black
N6023	HNBR	88 Shore A	Rubber	Black
N6026	NBR	50 Shore A	Rubber	Black
N6027	NBR	70 Shore A	Rubber	Black
N6029	NBR	75 Shore A	Rubber	Black
N6031	HNBR	70 Shore A	Rubber	Black
N6032	NBR	70 Shore A	Rubber	Black
N6033	NBR	90 Shore A	Rubber	Black
N6034	XNBR	90 Shore A	Rubber	Black
N6035	NBR	70 Shore A	Rubber	Blue
N6036	NBR	70 Shore A	Rubber	Black
N8097	NBR	80 Shore A	Rubber	Black
N8220	HNBR	90 Shore A	Rubber	Black
N9020	HNBR	90 Shore A	Rubber	Black

Hytrel® and Viton® are registered trademarks of E. I. du Pont de Nemours and Company for its brand of thermoplastic polyester elastomer.
Fluorochem® (2012) and Ultraflex® (2011) are registered trademarks of Martin Fluid Power, Inc. Disogrin® is a trademark of Freudenberg-NOK General Partnership.

General Description	Test Method	Temperature Range
Butadiene Acrylonitrile Copolymer	ASTM D2000 M4CH814 A25 B14 EF31 EO15 EO35 Z1:-44°C	-44°C to +100°C -47°F to +212°F
Butadiene Acrylonitrile Copolymer.	ASTM D2000 M4DH716 B36 EO16 EO36 F17	-40°C to +150°C -40°F to +302°F
Low Temp, API 6a certified, Butadiene Acrylonitrile Copolymer, DD/EE material class.		-45°C to +148°C -50°F to +300°F
Low Temp, Internally Lubricated, NBR		Dynamic Sealing: -50°C to +120°C -67°F to +248°F Static Sealing: -65°C to +125°C -85°F to +257°F
Butadiene Acrylonitrile Copolymer.		-24°C to +150°C -11°F to +302°F
Butadiene Acrylonitrile Copolymer.	ASTM D2000 M2BG510 A14 B14 EA14 EF11 F17	-40°C to +100°C -40°F to +212°F
Butadiene Acrylonitrile Copolymer.	ASTM D2000 M2BG710 A14 B14 EA14 EF11 EO14 EO34 Z1	-30°C to +100°C -22°F to +212°F
Butadiene Acrylonitrile Copolymer.	ASTM D2000 M6BG810 A14 B14 EO14 EO34 F19 Z1 Z2 Z3	-55°C to +100°C -67°F to +212°F
Low Temperature Service Butadiene Acrylonitrile Copolymer.		Dynamic Sealing: -40°C to +150°C -40°F to +302°F Static Sealing: -55°C to +150°C -67°F to +302°F
Low Temperature NBR. Recommended for: petroleum oils, water (up to 212°F), Salt & Alkali solutions, weak acids	ASTM D2000 5BG720 A14 B14 B34 EO14 EO34 F19	-48°C to +100°C -55°F to +212°F
Butadiene Acrylonitrile Copolymer.	ASTM D2000 M2BG910 A14 B14 B34 EA14 EF11 EF21 EO34 Z1 Z2 Z3=Elong. 95%(min)	-35°C to +125°C -31°F to +257°F
Carboxylated Nitrile.		-17°C to +135°C 0°F to +275°C
Low Temperature NBR		-50°C to +125°C -67°F to +257°F
Butadiene Acrylonitrile Copolymer.	ASTM-M2BG 710 B14 E014 F17 Z1	-30°C to +125°C -22°F to +257°F
Butadiene Acrylonitrile Copolymer.	ASTM D2000 M4HK710 A1-11 B38 EF31 EF21 EO14 EO34	-20°C to +110°C -22°F to +230°F
Explosive Decompression Resistant Hydrogenated Nitrile Butadiene Rubber.	NORSOK M710 [Rev. 2, Oct. 2001]	-31°C to +148°C -25°F to +300°F
Explosive Decompression Resistant Hydrogenated Nitrile Butadiene Rubber.	NORSOK M710 [Rev. 2, Oct. 2001]	-31°C to +148°C -25°F to +300°F

This information is only to be used as a guide to selection of seal materials.
Application, as well as temperature, pressures, media, and finishes should all be considered when choosing seal materials.

Seal Compounds

MFPSEALS®
www.mfpseals.com

Compound Name	Abbreviation	Hardness	Material Group	Color
S7100	SIL	70 Shore A	Silicone	Rust Red
T1000	PTFE	51 - 60 Shore D	PTFE	White
T1015	PTFE	≥ 50 Shore D	PTFE	Turquoise
T1025	PTFE	59 - 62 Shore D	Filled PTFE	Gray
T1050	PTFE	60 - 65 Shore D	Filled PTFE	Blue
T1075	PTFE	62 - 67 Shore D	Filled PTFE	Off White
T1100	PTFE	55 - 60 Shore D	Filled PTFE	Blue Gray
T1125	PTFE	66 Shore D	Filled PTFE	Charcoal Gray
T1150	PTFE	≥ 55 Shore D	Filled PTFE	Charcoal Gray
T1160	PTFE	≥ 59 Shore D	Filled PTFE	Charcoal Gray
T1175	PTFE	65 Shore D	Filled PTFE	Charcoal Gray
T1200	PTFE	≥ 55 Shore D	Filled PTFE	Charcoal Gray
T1225	PTFE	≥ 55 Shore D	Filled PTFE	Tan
T1250	PTFE	≥ 55 Shore D	Filled PTFE	Tan
T2000	TFM	≥ 51 Shore D	Modified PTFE	White
T2025	TFM	66 Shore D	Modified PTFE	Black
T2050	TFM	69 Shore D	Modified PTFE	Black
T2075	TFM	67 Shore D	Modified PTFE	Black
T4000	PTFE	≥ 58 Shore D	Modified PTFE	Maroon
T4025	PTFE	≥ 64 Shore D	Filled PTFE	Black

Hytrel® and Viton® are registered trademarks of E. I. du Pont de Nemours and Company for its brand of thermoplastic polyester elastomer.
Fluorochem® (2012) and Ultraflex® (2011) are registered trademarks of Martin Fluid Power, Inc. Disogrin® is a trademark of Freudenberg-NOK General Partnership.

General Description	Test Method	Temperature Range
Silicone Rubber; FDA grade without certification.	ASTM D2000 M7GE 705 A19 B37 EA14 EO16 EO36 F19	-55°C to +240°C -67°F to +464°F
Virgin PTFE		-200°C to +260°C -328°F to +500°F
Turquoise Pigmented PTFE		-200°C to +260°C -328°F to +500°F
PTFE, 5% Moly		-200°C to +260°C -328°F to +500°F
PTFE, 15% Glass		-200°C to +260°C -328°F to +500°F
PTFE, 25% Glass		-200°C to +260°C -328°F to +500°F
PTFE, 15% Glass, 5% Moly		-200°C to +260°C -328°F to +500°F
PTFE, 23% Carbon, 2% Graphite		-200°C to +260°C -328°F to +500°F
PTFE, 10% Carbon		-200°C to +260°C -328°F to +500°F
15% Carbon Filled PTFE		-200°C to +260°C -328°F to +500°F
PTFE, 25% Carbon		-200°C to +260°C -328°F to +500°F
PTFE, 15% Graphite		-200°C to +260°C -328°F to +500°F
PTFE, 10% Ekonol		-200°C to +260°C -328°F to +500°F
PTFE, Polyimide		-200°C to +260°C -328°F to +500°F
TFM, Unfilled, Modified PTFE		-200°C to +260°C -328°F to +500°F
TFM, Carbon		-200°C to +260°C -328°F to +500°F
TFM, Carbon, Carbon Fiber		-200°C to +260°C -328°F to +500°F
TFM, Carbon Fiber		-200°C to +260°C -328°F to +500°F
PTFE, General purpose bearing material for bushings and sliding pads.		-200°C to +260°C -328°F to +500°F
25% Carbon Graphite filled PTFE		-200°C to +260°C -328°F to +500°F

This information is only to be used as a guide to selection of seal materials.
Application, as well as temperature, pressures, media, and finishes should all be considered when choosing seal materials.

Seal Compounds

MFPSEALS®
www.mfpseals.com

Compound Name	Abbreviation	Hardness	Material Group	Color
T4075	PTFE	≥ 58 Shore D	Modified PTFE	Dark Teal
T4100	PTFE	≥ 60 Shore D	Modified PTFE	Black
T4125	PTFE	≥ 55 Shore D	Modified PTFE	Natural
T4150	PTFE	≥ 55 Shore D	Modified PTFE	Tan
T4175	PTFE	≥ 59 Shore D	Modified PTFE	Natural
T4200	PTFE	≥ 55 Shore D	Modified PTFE	White
T4250	PTFE	≥ 60 Shore D	Modified PTFE	Blue
T4275	PTFE	≥ 58 Shore D	Modified PTFE	Blue
T4300	PTFE	≥ 55 Shore D	Modified PTFE	Teal
T4325	PTFE	≥ 56 Shore D	Modified PTFE	Dark Gray
T5000	PTFE	≥ 58 Shore D	Filled PTFE	Brown
T5050	PTFE	≥ 62 Shore D	Filled PTFE	Brown
T5100	PTFE	≥ 58 Shore D	Filled PTFE	Green
U2143 - Ultraflex™	TPU	80 Shore A	Urethane	Natural
U2144 - Ultraflex™	TPU	88 Shore A	Urethane	Natural
U2145 - Ultraflex™	TPU	95 Shore A	Urethane	Yellow
U2146 - Ultraflex™	TPU	90 Shore A	Urethane	Blue
U2148 - Ultraflex™	TPU	90 Shore A	Cast Urethane	Natural
U2150 - Ultraflex™	TPU	91 Shore A	Urethane	Dark Green

Hytrel® and Viton® are registered trademarks of E. I. du Pont de Nemours and Company for its brand of thermoplastic polyester elastomer. AFLAS® is a registered trademark of the Asahi Glass Co., Ltd. Fluorochem® (2012) and Ultraflex® (2011) are registered trademarks of Martin Fluid Power, Inc. Disogrin® is a trademark of Freudenberg-NOK General Partnership.

General Description	Test Method	Temperature Range
Proprietary Bronze-filled PTFE		-200°C to +260°C -328°F to +500°F
High heat and Impact application. Excellent chemical resistance.		-200°C to +260°C -328°F to +500°F
10% Polyimide PTFE		-200°C to +260°C -328°F to +500°F
Excellent electrical and chemical performance. Extreme load tolerance and chemical resistance.		-200°C to +260°C -328°F to +500°F
Unique physical and chemical properties for use in food processing /pharmaceutical.		-200°C to +260°C -328°F to +500°F
Excellent physical and chemical properties, perfect for food processing/pharmaceutical.		-200°C to +260°C -328°F to +500°F
FDA / EU 10/2011 approved, Antibacterial/Antimicrobial Fluoropolymer, Stainless Steel filled PTFE	ISO 22196:2007 (Antibacterial)	-200°C to +260°C -328°F to +500°F
FDA / EU 10/2011 approved, Optical, X-Ray & Metal Detectable Polytetrafluoroethylene.		-200°C to +260°C -328°F to +500°F
Proprietary Bronze-filled PTFE		-200°C to +260°C -328°F to +500°F
PTFE with Mineral filler & additives		-200°C to +260°C -328°F to +500°F
40% Bronze, 2% Carbon filled PTFE		-200°C to +260°C -328°F to +500°F
60% Bronze, 2% Carbon filled PTFE; for use in Molding.		-200°C to +260°C -328°F to +500°F
High grade virgin PTFE compounded with enhanced Bronze fillers and additional additives to improve wear resistance.		-200°C to +260°C -328°F to +500°F
Aromatic polyester-based thermoplastic polyurethane		-53°C to +82°C -65°F to +180°F
Aromatic polyester-based thermoplastic polyurethane		-53°C to +93°C -65°F to +200°F
Aromatic polyester-based thermoplastic polyurethane.		-53°C to +93°C -65°F to +200°F
Aromatic polyester-based thermoplastic polyurethane.	ASTM D2000 M7BG910 EO14 EO34	-40°C to +100°C -40°F to +212°F
Aromatic polyester-based thermoplastic polyurethane.		-40°C to +93°C -40°F to +200°F
Aromatic polyether-based thermoplastic polyurethane		-50°C to +110°C -58°F to +230°F

This information is only to be used as a guide to selection of seal materials.
Application, as well as temperature, pressures, media, and finishes should all be considered when choosing seal materials.

Seal Compounds

MFPSEALS®
www.mfpseals.com

Compound Name	Abbreviation	Hardness	Material Group	Color
U2151 - Ultraflex™	TPU	95 Shore A	Urethane	Red
U2155 - Ultraflex™	TPU	55 Shore D	Urethane	Yellow
U2156 - Ultraflex™	TPU	50 Shore D	Urethane	Black
U2157 - Ultraflex™	TPU	55 Shore D	Urethane	Black
U2159 - Ultraflex™	TPU	95 Shore A	Urethane	Black
U2161 - Ultraflex™	TPU	55 Shore D	Urethane	Dark Gray
U2162 - Ultraflex™	TPU	95 Shore A	Urethane	Black
U2163	TPU	94 Shore A	Urethane	Black
U2164	TPU	80 Shore A	Urethane	Black
U2166	TPU	70 Shore D	Urethane	Black
U2167 - Ultraflex™	TPU	85 Shore A	Urethane	Natural
U2168 - Ultraflex™	TPU	95 Shore A	Urethane	Blue
U2169 - Ultraflex™	TPU	55 Shore D	Urethane	Yellow
U4145 - Ultraflex™	TPU	95 Shore A	Urethane	Natural
U4150 - Ultraflex™	TPU	92 Shore A	Urethane	Tan
U4160	TPU	60 Shore D	Urethane	Natural
V1125	AFLAS®	83 Shore A	Fluoroelastomer	Black

Hytrel® and Viton® are registered trademarks of E. I. du Pont de Nemours and Company for its brand of thermoplastic polyester elastomer. AFLAS® is a registered trademark of the Asahi Glass Co., Ltd. Fluorochem® (2012) and Ultraflex® (2011) are registered trademarks of Martin Fluid Power, Inc. Disogrin® is a trademark of Freudenberg-NOK General Partnership.

General Description	Test Method	Temperature Range
Aromatic polyester-based thermoplastic polyurethane.		-53°C to +120°C -65°F to +250°F
Aromatic polyester-based thermoplastic polyurethane.		-53°C to +107°C -65°F to +225°F
Aromatic polyester-based thermoplastic polyurethane.		-45°C to +93°C -50°F to +200°F
Aromatic polyester-based thermoplastic polyurethane.		-34°C to +100°C -30°F to +212°F
Aromatic polyester-based thermoplastic polyurethane.		-40°C to +90°C -40°F to +195°F *Intermittent Exposure +121°C (+250°F)
Thermoplastic polyurethane with internal lubricant		-30°C to +110°C -22°F to +225°F
Aromatic polyester-based thermoplastic polyurethane		-53°C to +93°C -65°F to +200°F
Thermoplastic Polyurethane with solid lubricant, hydrolysis resistant.		-22°C to +110°C -8°F to +230°F
Aromatic polyester-based thermoplastic polyurethane.		-45°C to +93°C -50°F to +200°F
Aromatic polyester-based thermoplastic polyurethane.		-53°C to +93°C -65°F to +200°F
Aromatic polyester-based, thermoplastic polyurethane. FDA food-contact regulation 21 CFR 177.1680 compliant.		-40°C to +65°C -40°F to +150°F
Thermoplastic Polyurethane.	ASTM D2000 M7BG910 EO14 EO34 Z1	-40°C to +100°C -40°F to +212°F
Hydrolysis Resistant, Thermoplastic Polyurethane		-20°C to +115°C -4°F to +240°F
Sour gas resistant urethane.		-53°C to +100°C -65°F to +212°F
PPDI based Thermoplastic Polyurethane		-40°C to +135°C* -40°F to +275°F* *Intermittent Exposure +148°C (+300°F)
Proprietary PPDI based, Thermoplastic Polyurethane.		-40°C to +135°C -40°F to +275°F *Intermittent Exposure +148°C (+300°F)
Excellent heat and chemical resistance including acids and bases, & excellent oil, ozone and weather resistance.	ASTM D2000 M2HK810 A1-10 B38 EO36 Z1: HD83±5	0°C to +230°C +32°F to +446°F

This information is only to be used as a guide to selection of seal materials.
Application, as well as temperature, pressures, media, and finishes should all be considered when choosing seal materials.

Seal Compounds

MFPSEALS®
www.mfpseals.com

Compound Name	Abbreviation	Hardness	Material Group	Color
V7100	FKM	75 Shore A	Fluorocarbon Elastomer	Black
V7125	FKM	75 Shore A	Fluorocarbon Elastomer	Black
V7150	FKM	75 Shore A	DuPont Viton®	Black
V7155	FKM	75 Shore A	Fluorocarbon Elastomer	Brown
V7160	FKM	75 Shore A	Fluorocarbon Elastomer	Brown
V7165	FKM	90 Shore A	Fluorocarbon Elastomer	Black
V7175	FKM	90 Shore A	DuPont Viton®	Black
V7185	FKM	90 Shore A	Fluorocarbon Elastomer	Brown
V7200	FKM	90 Shore A	Fluorocarbon Elastomer	Black
V7250	FKM	75 Shore A	DuPont Viton®	Green
V7260	FKM	75 Shore A	Fluorocarbon Elastomer	Green
V7300	FKM	80 Shore A	DuPont Viton®	Black
V7325	FKM-GLT	75 Shore A	Fluorocarbon Rubber	Black
V7350	FEPM	90 Shore A	Fluoroelastomer	Black
V7525	FEPM	75 Shore A	AFLAS® Fluoroelastomer	Black
V7550	Viton® A	75 Shore A	Fluoroelastomer	Black
V7600	Viton®	75 Shore A	Fluorocarbon Elastomer	Black

Hytrel® and Viton® are registered trademarks of E. I. du Pont de Nemours and Company for its brand of thermoplastic polyester elastomer. AFLAS® is a registered trademark of the Asahi Glass Co., Ltd. Fluorochem® (2012) and Ultraflex® (2011) are registered trademarks of Martin Fluid Power, Inc. Disogrin® is a trademark of Freudenberg-NOK General Partnership.

General Description	Test Method	Temperature Range
High resistance to heat, chemicals, weather and compression set.	ASTM D2000 M4HK710 A1-11 B38 EF31 EO78 Z Z1:75±5	-20°C to +200°C -4°F to +392°F
High resistance to heat, chemicals, weather and compression set.	ASTM D2000 M4HK710 A1-11 B38 EF31 EO78 Z1:75±5	-15°C to +200°C +5°F to +392°F
High resistance to heat, chemicals, weather and compression set.	ASTM D2000 M4HK710 A1-11 B38 EO78 EF31 Z1:75±5	-15°C to +200°C +5°F to +392°F
High resistance to heat, chemicals, weather and compression set.	ASTM D2000 M2HK710 A1-10 B38 EF31 EO78 Z1:Brown Z2:75±5	-15°C to +200°C +5°F to +392°F
High resistance to heat, chemicals, weather and compression set.	ASTM D2000-99 M6HK810 A1-10 B38 C12 C20 EF31 EO88 Z1: Meets FDA 177.2600 Z2: Meets 3A Sanitary Class I requirements	-7°C to +200°C +20°F to +400°F
High resistance to heat, chemicals,	ASTM D2000 M2HK910 A1-11 B38 EO78 EF31 weather and compression set.	-20°C to +200°C -4°F to +392°F
High resistance to heat, chemicals, weather and compression set.	ASTM D2000 M2HK910 A1-10 B38 EF31 EO78 Z:DuPont Viton®	-10°C to +200°C +14°F to +392°F
High resistance to heat, chemicals, weather and compression set.	ASTM D2000 M2HK910 A1-10 B38 C12 EF31 EO78 Z1:Brown	-5°C to +200°C +23°F to 392°F
Meets requirements of NORSOK M710 [Rev. 2, Oct. 2001] in respect to rapid gas decompression resistance in 10 mol% carbon dioxide at 150 bar and 100°C.	ASTM D2000 M3HK914 A1-10 B37 B38 EF31 EO78 Z1 Z2 Z2: RGD Approval	-30°C to +250°C -22°F to +482°F
High resistance to heat, chemicals, weather and compression set.	ASTM D2000 M2HK810 A1-10 B37 B38 EO78 EF31 Z1:75±5 Shore A Z3: Dupont	-15°C to +200°C +5°F to +392°F
Fluorocarbon Rubber	ASTM D2000 M2HK810 A1-10 B38 EF31 E078 EO88 Z1:75±5 Shore A	-25°C to +250°C -13°F to +482°F
High resistance to heat, chemicals, weather and compression set.	ASTM D2000 M2HK810 A1-10 B37 B38 EF31 Z1:TEAR (Test Method D624 B/C) Z2: Compression Set: 70h@180°C, 40% max	-10°C to +200°C +14°F to +392°F
AMS-R-83485 (M83485/1) Approved		-40°C to +200°C -40°F to +392°F
High-Temperature, High-Pressure Carbon Dioxide Decompression Resistance per NACE TM0297:2008	ASTM D2000 M2HK910 A1-10 B38 EF31 F15 Z1 Z2 Z3 Z4	-20°C to +220°C -4°F to +482°F
Excellent heat and chemical resistance including acids and bases, & excellent oil, ozone and weather resistance.		-0°C to +204°C +32°F to +400°F
AMS 3216G	ASTM D2000 M6HK810 A1-10 B38 C12 EF31 EO88	-32°C to +204°C -26°F to +400°F
Fluorocarbon Rubber	ASTM D2000 M2HK710 A1-10 B37 B38 EF31 EO78 Z1	-15°C to +250°C 5°F to +482°F

This information is only to be used as a guide to selection of seal materials.
Application, as well as temperature, pressures, media, and finishes should all be considered when choosing seal materials.

RETURN TO INDEX

Seal Compounds

MFPSEALS®
www.mfpseals.com

Compound Name	Abbreviation	Hardness	Material Group	Color
V7625	FKM	80 Shore A	Fluorocarbon Elastomer	Black
V7650	FKM	75 Shore A	Fluorocarbon Elastomer	Black
V7675	FKM	90 Shore A	Fluorocarbon Elastomer	Black
V9080	FKM	90 Shore A	Fluorocarbon Elastomer	Black
V9090	FKM	90 Shore A	Fluorocarbon Elastomer	Black

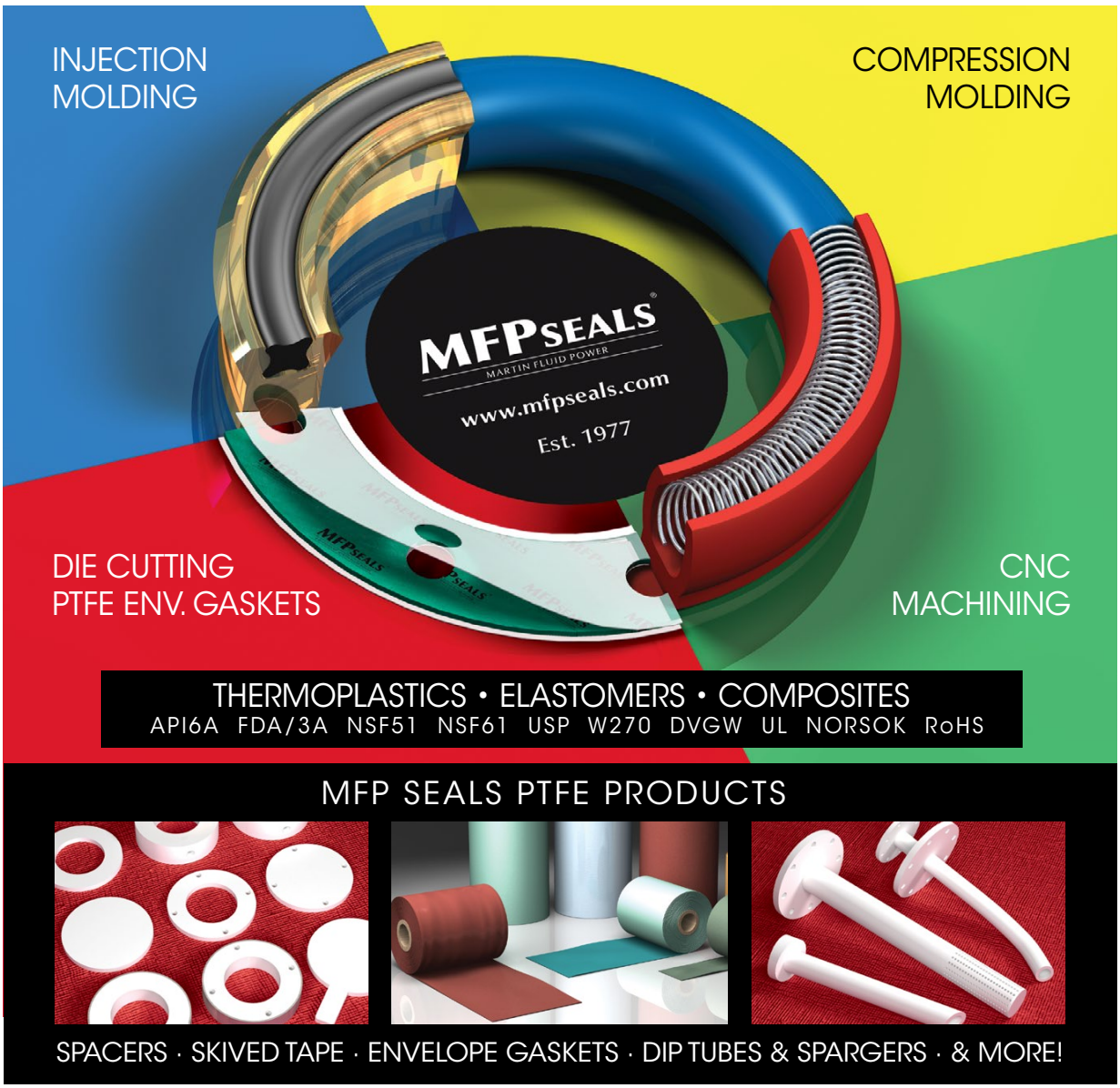

RETURN TO AD INDEX

Hytrel® and Viton® are registered trademarks of E. I. du Pont de Nemours and Company for its brand of thermoplastic polyester elastomer. AFLAS® is a registered trademark of the Asahi Glass Co., Ltd. Fluorochem® (2012) and Ultraflex® (2011) are registered trademarks of Martin Fluid Power, Inc. Disogrin® is a trademark of Freudenberg-NOK General Partnership.

RETURN TO INDEX

General Description	Test Method	Temperature Range
Fluorocarbon Rubber	ASTM D2000 M2HK810 A1-10 B38 EF31 EO78	-25°C to +250°C -13°F to +482°F
Fluorocarbon Rubber	FCA SD-A0240 Section 3.5 SAE J200 M2HK710 Z1 Z3 Z4 Z5 Z6 Z8	-40°C to +250°C -40°C to +482°F
High-performance Fluoropolymer, for O-RIngs, seals and gaskets.	ASTM D2000 M3HK910 A1-10 B38 EF31 EO78	-15°C to +200°C 5°F to +392°F
Pressure and Explosive Decompression resistance per NORSOK M-710 (Rev.2).	ASTM D2000 M5HK914 A1-11 B38 EF31 F15 NORSOK M710 [Rev. 2, Oct. 2001]	-26°C to +204°C -15°F to +400°F
RGD Rapid Gas Decompression resistance per NORSOK M-710 (Rev.2).	ASTM D2000 M3HK914 A1-10 B38 Z1 RGD per NORSOK M710 [Rev. 2, Oct. 2001]	-40°C to +204°C -40°F to +400°F

Now that's an O-Ring!

NO MAX DIAMETER

The SMALLEST O-Ring that can be produced with this process:

C/S: 0.103 in. (2.62 mm)

I.D.: 7.874 in. (200 mm)

Minimum Order: One

Physical and **Mechanical Material Features** are **Not Altered** by this process.

The LARGEST O-Ring that can be produced with this process:

C/S: 1.574 in. (40 mm)

I.D.: Unlimited

Maximum Order: Unlimited

No Glues or **Hot Vulcanization** used in this process.

Available Materials: EPDM, EPDM PX, FEPM, FKM, FFKM, CR, HNBR, NBR, VMQ

Shown: 15 ft. (4,572 mm) I.D. Green FKM O-Ring.

INCH CROSS SECTIONS (AS568)

0.103	0.139	0.210	0.250	0.275	0.375	0.500

METRIC CROSS SECTIONS (ISO3601-1)

2.62	4.5	5.70	7.00	8.50	10.82	13.00	16.00	20.00	26.00
3.00	5.0	6.00	7.50	9.00	11.00	14.00	17.00	22.00	28.00
3.53	5.33	6.35	8.00	9.50	12.00	14.40	18.00	24.00	30.00
4.00	5.50	6.50	8.40	10.00	12.70	15.00	19.00	25.00	40.00

Dimensional Tolerances according to ISO 3601-1 and surface imperfections to ISO 3601-3, with integrations for non-standard dimensions.

CONTACT YOUR MFP SEALS SALES REPRESENTATIVE FOR MORE INFORMATION

RETURN TO AD INDEX

This information is only to be used as a guide to selection of seal materials.
Application, as well as temperature, pressures, media, and finishes should all be considered when choosing seal materials.

MFPSEALS®
www.mfpseals.com

COLOR ME PTFE

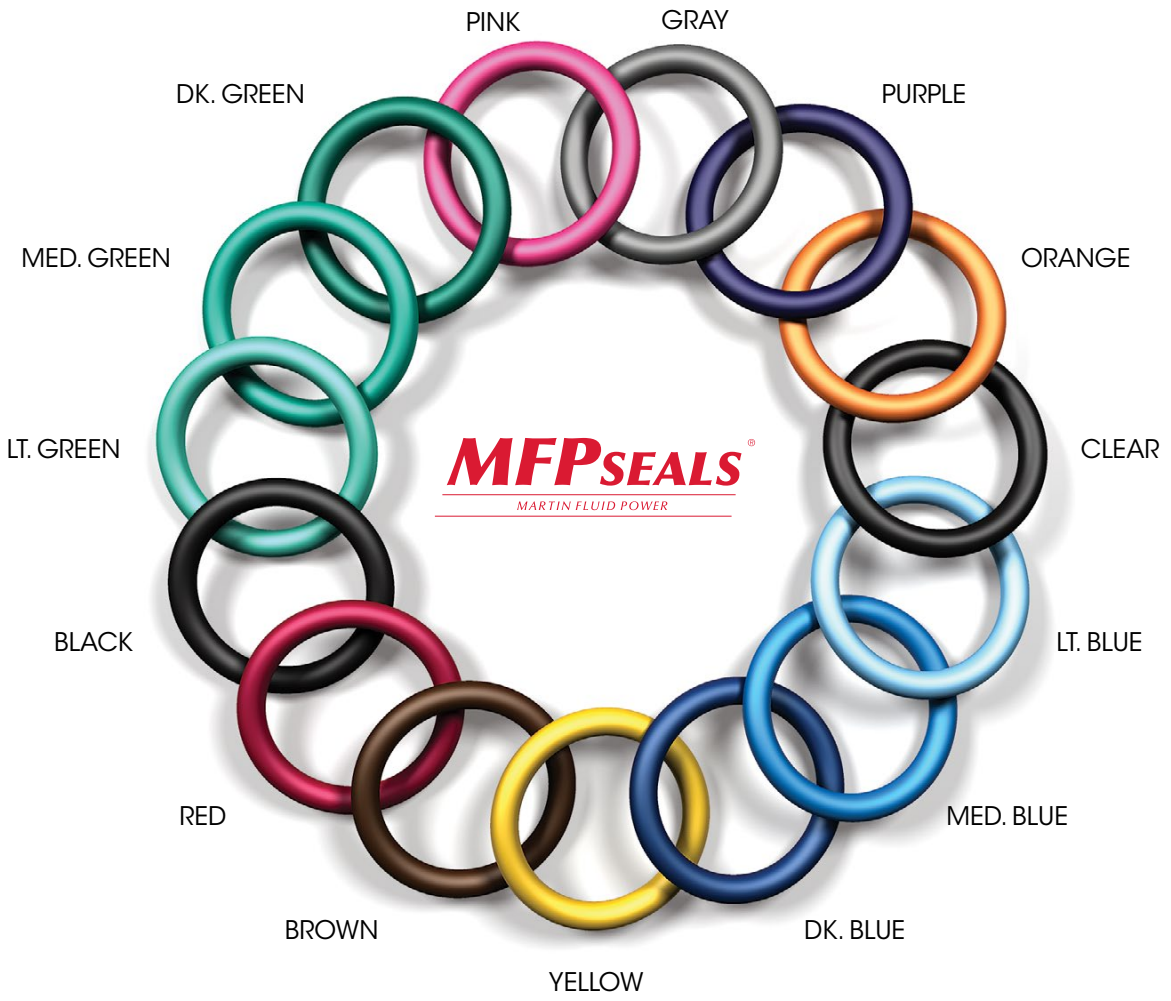

PTFE COATED O-RINGS FROM MFP SEALS CAN BRIGHTEN UP YOUR BOTTOM LINE!

The Benefits of PTFE Color Coated O-Rings:

- PTFE color coatings make identification easy, when used to distinguish sizes or materials.
- Coated O-Rings are less susceptible to contamination and are easier to handle by not having to deal with messy oil-based lubricants.
- The PTFE coating extends wear life, resulting in reduced material decay and less downtime.
- Added lubrication makes installation easier, reduces assembly time, and keeps machinery running smoother, longer. Less down-time equals more profit.

For more information or to order contact MFP Seals.

ENGINEERING GUIDE

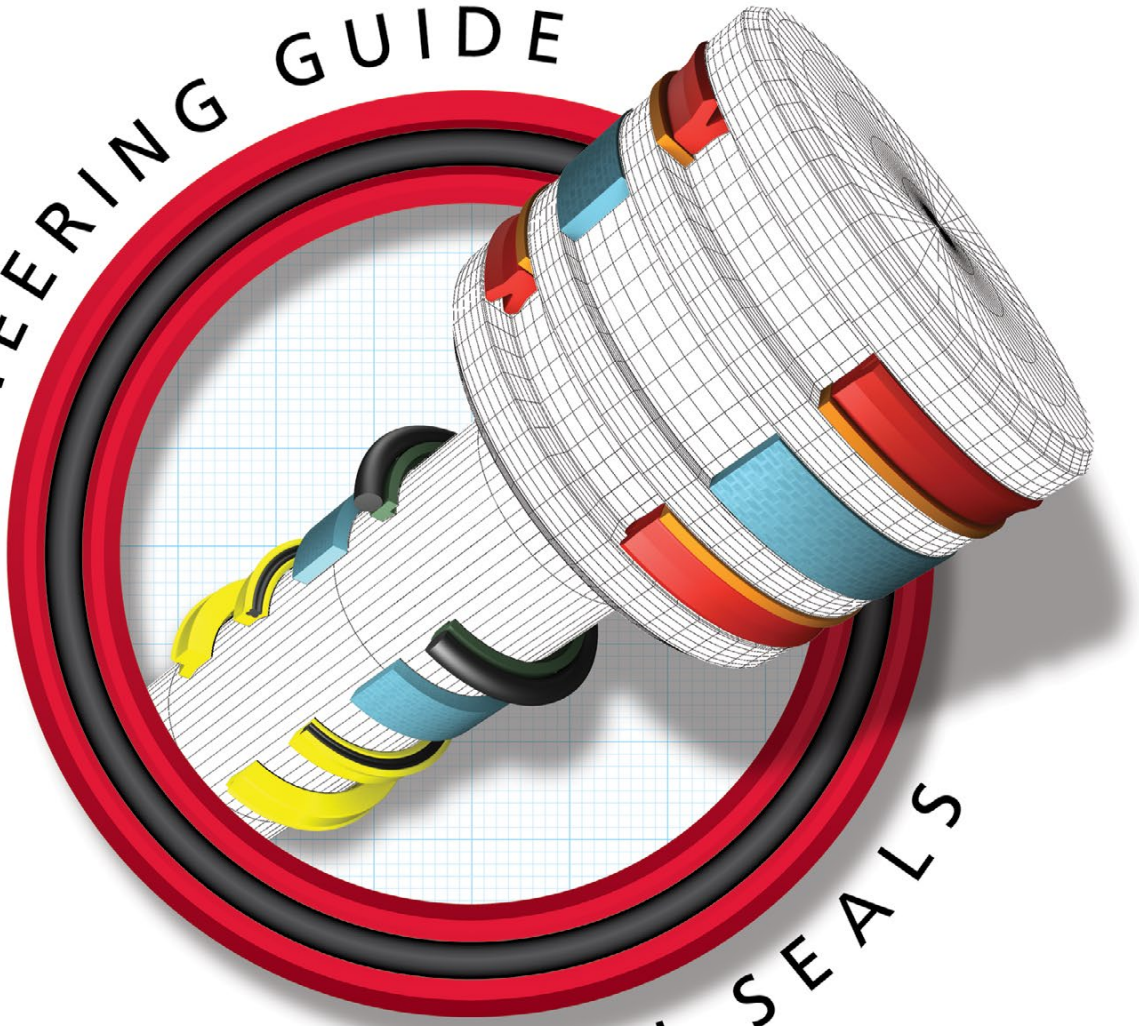

INCH SEALS

INCH SEAL PROFILES

Quick O-Ring Gland Design - Inch Standard

MFPSEALS
www.mfpseals.com

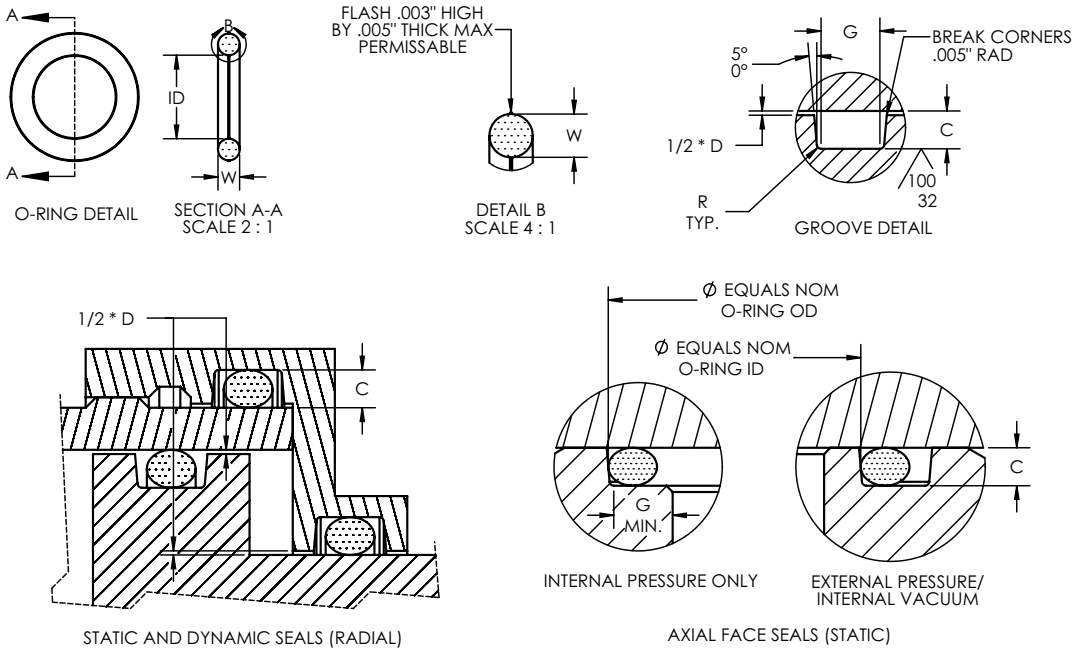

Industrial Reciprocating O-Ring Packing Glands

O-Ring Size 568 Series	W O-Ring Cross Section	C Gland Depth	Squeeze		D Diametrical Clearance Max.	G Groove Width +.010 -.000			R Groove Radius	Eccen-tricity Max.
			Inches	%		No Backup Rings	One Backup Ring	Two Backup Rings		
006 thru 050	.070 ± .003	.055-.057	.010-.018	15-25	.004	.090	.145	.203	.005-.015	.002
102 thru 178	.103 ± .003	.087-.090	.010-.019	10-18	.005	.140	.182	.244	.005-.020	.003
201 thru 284	.139 ± .004	.119-.123	.012-.024	9-17	.006	.180	.217	.296	.005-.030	.004
309 thru 395	.210 ± .005	.183-.188	.017-.032	8.5-15	.006	.280	.333	.423	.005-.050	.006
425 thru 475	.275 ± .006	.234-.240	.029-.047	10.5-17	.007	.370	.435	.574	.005-.060	.008

Industrial O-Ring Static Seal Glands

O-Ring Size 568 Series	W O-Ring Cross Section	C Gland Depth		Squeeze				D Diametrical Clearance Max.	G Groove Width +.010 -.000			R Groove Radius	Eccen-tricity Max.
				Radial		Axial							
		Radial	Axial	Inches	%	Inches	%		No Backup Rings	One Backup Ring	Two Backup Rings		
006 thru 050	.070 ± .003	.049-.050	.045-.055	.012-.014	18-19	.017-.028	25.5-38.5	.004	.090	.145	.203	.005-.015	.002
102 thru 178	.103 ± .003	.080-.086	.072-.080	.014-.026	13.5-25	.020-.034	20-32	.005	.140	.182	.244	.005-.020	.003
201 thru 284	.139 ± .004	.112-.118	.100-.110	.017-.031	12.5-29	.025-.043	18.5-30	.006	.180	.217	.296	.005-.030	.004
309 thru 395	.210 ± .006	.176-.184	.165-.175	.021-.039	10-18	.030-.050	14.5-23	.006	.280	.333	.423	.005-.050	.006
425 thru 475	.275 ± .006	.225-.235	.220-.230	.034-.056	12.5-20	.039-.061	14.5-21.5	.007	.370	.435	.574	.005-.060	.008

The information shown on this page is provided as a general guideline for O-Ring glands. Before machining your glands, please contact the MFP Seals Engineering Department to determine the correct measurements for your specific application.

Compound information available on pages 20-37.

Surface Finish: ISO 4287 & Chamfer Information on pages 7-9.
For ISO tolerance charts, refer to pages 12-13.

MFPSEALS®
www.mfpseals.com

O-Ring Standard Sizes - AS568D

DASH NUMBER	NOMINAL SIZE ID	NOMINAL SIZE OD	NOMINAL SIZE C/S	ACTUAL SIZE ID	ACTUAL SIZE C/S
1/32 - CROSS SECTION					
-001	1/32	3/32	1/32	.029 ± .004	.040 ± .003
3/64 - CROSS SECTION					
-002	3/64	9/64	3/64	.042 ± .004	.050 ± .003
1/16 - CROSS SECTION					
-003	1/16	3/16	1/16	.056 ± .004	.060 ± .003
-004	5/64	13/64	1/16	.070 ± .005	.070 ± .003
-005	3/32	7/32	1/16	.101 ± .005	.070 ± .003
-006	1/8	1/4	1/16	.114 ± .005	.070 ± .003
-007	5/32	9/32	1/16	.145 ± .005	.070 ± .003
-008	3/16	5/16	1/16	.176 ± .005	.070 ± .003
-009	7/32	11/32	1/16	.208 ± .005	.070 ± .003
-010	1/4	3/8	1/16	.239 ± .005	.070 ± .003
-011	5/16	7/16	1/16	.301 ± .005	.070 ± .003
-012	3/8	1/2	1/16	.364 ± .005	.070 ± .003
-013	7/16	9/16	1/16	.426 ± .005	.070 ± .003
-014	1/2	5/8	1/16	.489 ± .005	.070 ± .003
-015	9/16	11/16	1/16	.551 ± .007	.070 ± .003
-016	5/8	3/4	1/16	.614 ± .009	.070 ± .003
-017	11/16	13/16	1/16	.676 ± .009	.070 ± .003
-018	3/4	7/8	1/16	.739 ± .009	.070 ± .003
-019	13/16	15/16	1/16	.801 ± .009	.070 ± .003
-020	7/8	1	1/16	.864 ± .009	.070 ± .003
-021	15/16	1-1/16	1/16	.926 ± .009	.070 ± .003
-022	1	1-1/8	1/16	.989 ± .010	.070 ± .003
-023	1-1/16	1-3/16	1/16	1.051 ± .010	.070 ± .003
-024	1-1/8	1-1/4	1/16	1.114 ± .010	.070 ± .003
-025	1-3/16	1-5/16	1/16	1.176 ± .011	.070 ± .003
-026	1-1/4	1-3/8	1/16	1.239 ± .011	.070 ± .003
-027	1-5/16	1-7/16	1/16	1.301 ± .011	.070 ± .003
-028	1-3/8	1-1/2	1/16	1.364 ± .013	.070 ± .003
-029	1-1/2	1-5/8	1/16	1.489 ± .013	.070 ± .003
-030	1-5/8	1-3/4	1/16	1.614 ± .013	.070 ± .003
-031	1-3/4	1-7/8	1/16	1.739 ± .015	.070 ± .003
-032	1-7/8	2	1/16	1.864 ± .015	.070 ± .003
-033	2	2-1/8	1/16	1.989 ± .018	.070 ± .003
-034	2-1/8	2-1/4	1/16	2.114 ± .018	.070 ± .003
-035	2-1/4	2-3/8	1/16	2.239 ± .018	.070 ± .003
-036	2-3/8	2-1/2	1/16	2.364 ± .018	.070 ± .003
-037	2-1/2	2-5/8	1/16	2.489 ± .018	.070 ± .003
-038	2-5/8	2-3/4	1/16	2.614 ± .020	.070 ± .003
-039	2-3/4	2-7/8	1/16	2.739 ± .020	.070 ± .003
-040	2-7/8	3	1/16	2.864 ± .020	.070 ± .003
-041	3	3-1/8	1/16	2.989 ± .024	.070 ± .003
-042	3-1/4	3-3/8	1/16	3.239 ± .024	.070 ± .003
-043	3-1/2	3-5/8	1/16	3.489 ± .024	.070 ± .003
-044	3-3/4	3-7/8	1/16	3.739 ± .027	.070 ± .003
-045	4	4-1/8	1/16	3.989 ± .027	.070 ± .003
-046	4-1/4	4-3/8	1/16	4.239 ± .030	.070 ± .003
-047	4-1/2	4-5/8	1/16	4.489 ± .030	.070 ± .003
-048	4-3/4	4-7/8	1/16	4.739 ± .030	.070 ± .003
-049	5	5-1/8	1/16	4.989 ± .037	.070 ± .003
-050	5-1/4	5-3/8	1/16	5.239 ± .037	.070 ± .003

DASH NUMBER	NOMINAL SIZE ID	NOMINAL SIZE OD	NOMINAL SIZE C/S	ACTUAL SIZE ID	ACTUAL SIZE C/S
3/32 - CROSS SECTION					
-102	1/16	1/4	3/32	.049 ± .005	.103 ± .003
-103	3/32	9/32	3/32	.081 ± .005	.103 ± .003
-104	1/8	5/16	3/32	.112 ± .005	.103 ± .003
-105	5/32	11/32	3/32	.143 ± .005	.103 ± .003
-106	3/16	3/8	3/32	.174 ± .005	.103 ± .003
-107	7/32	13/32	3/32	.206 ± .005	.103 ± .003
-108	1/4	7/16	3/32	.237 ± .005	.103 ± .003
-109	5/16	1/2	3/32	.299 ± .005	.103 ± .003
-110	3/8	9/16	3/32	.362 ± .005	.103 ± .003
-111	7/16	5/8	3/32	.424 ± .005	.103 ± .003
-112	1/2	11/16	3/32	.487 ± .005	.103 ± .003
-113	9/16	3/4	3/32	.549 ± .007	.103 ± .003
-114	5/8	13/16	3/32	.612 ± .009	.103 ± .003
-115	11/16	7/8	3/32	.674 ± .009	.103 ± .003
-116	3/4	15/16	3/32	.737 ± .009	.103 ± .003
-117	13/16	1	3/32	.799 ± .010	.103 ± .003
-118	7/8	1-1/16	3/32	.862 ± .010	.103 ± .003
-119	15/16	1-1/8	3/32	.924 ± .010	.103 ± .003
-120	1	1-3/16	3/32	.987 ± .010	.103 ± .003
-121	1-1/16	1-1/4	3/32	1.049 ± .010	.103 ± .003
-122	1-1/8	1-5/16	3/32	1.112 ± .010	.103 ± .003
-123	1-3/16	1-3/8	3/32	1.174 ± .012	.103 ± .003
-124	1-1/4	1-7/16	3/32	1.237 ± .012	.103 ± .003
-125	1-5/16	1-1/2	3/32	1.299 ± .012	.103 ± .003
-126	1-3/8	1-9/16	3/32	1.362 ± .012	.103 ± .003
-127	1-7/16	1-5/8	3/32	1.424 ± .012	.103 ± .003
-128	1-1/2	1-11/16	3/32	1.487 ± .012	.103 ± .003
-129	1-9/16	1-3/4	3/32	1.549 ± .015	.103 ± .003
-130	1-5/8	1-13/16	3/32	1.612 ± .015	.103 ± .003
-131	1-11/16	1-7/8	3/32	1.674 ± .015	.103 ± .003
-132	1-3/4	1-15/16	3/32	1.737 ± .015	.103 ± .003
-133	1-13/16	2	3/32	1.799 ± .015	.103 ± .003
-134	1-7/8	2-1/16	3/32	1.862 ± .015	.103 ± .003
-135	1-15/16	2-1/8	3/32	1.925 ± .017	.103 ± .003
-136	2	2-3/16	3/32	1.987 ± .017	.103 ± .003
-137	2-1/16	2-1/4	3/32	2.050 ± .017	.103 ± .003
-138	2-1/8	2-5/16	3/32	2.112 ± .017	.103 ± .003
-139	2-3/16	2-3/8	3/32	2.175 ± .017	.103 ± .003
-140	2-1/4	2-7/16	3/32	2.237 ± .017	.103 ± .003
-141	2-5/16	2-1/2	3/32	2.300 ± .020	.103 ± .003
-142	2-3/8	2-9/16	3/32	2.362 ± .020	.103 ± .003
-143	2-7/16	2-5/8	3/32	2.425 ± .020	.103 ± .003
-144	2-1/2	2-11/16	3/32	2.487 ± .020	.103 ± .003
-145	2-9/16	2-3/4	3/32	2.550 ± .020	.103 ± .003
-146	2-5/8	2-13/16	3/32	2.612 ± .020	.103 ± .003
-147	2-11/16	2-7/8	3/32	2.675 ± .022	.103 ± .003
-148	2-3/4	2-15/16	3/32	2.737 ± .022	.103 ± .003
-149	2-13/16	3	3/32	2.800 ± .022	.103 ± .003
-150	2-7/8	3-1/16	3/32	2.862 ± .022	.103 ± .003
-151	3	3-3/16	3/32	2.987 ± .024	.103 ± .003
-152	3-1/4	3-7/16	3/32	3.237 ± .024	.103 ± .003
-153	3-1/2	3-11/16	3/32	3.487 ± .024	.103 ± .003
-154	3-3/4	3-15/16	3/32	3.737 ± .028	.103 ± .003

Surface Finish: ISO 4287 & Chamfer Information on pages 7-9.
For ISO tolerance charts, refer to pages 12-13.

Compound information available on pages 20-37.

O-Ring Standard Sizes - AS568D

MFPSEALS
www.mfpseals.com

DASH NUMBER	NOMINAL SIZE ID	NOMINAL SIZE OD	NOMINAL SIZE C/S	ACTUAL SIZE ID	ACTUAL SIZE C/S
3/32 - CROSS SECTION					
-155	4	4-3/16	3/32	3.987 ± .028	.103 ± .003
-156	4-1/4	4-7/16	3/32	4.237 ± .030	.103 ± .003
-157	4-1/2	4-11/16	3/32	4.487 ± .030	.103 ± .003
-158	4-3/4	4-15/16	3/32	4.737 ± .030	.103 ± .003
-159	5	5-3/16	3/32	4.987 ± .035	.103 ± .003
-160	5-1/4	5-7/16	3/32	5.237 ± .035	.103 ± .003
-161	5-1/2	5-11/16	3/32	5.487 ± .035	.103 ± .003
-162	5-3/4	5-15/16	3/32	5.737 ± .035	.103 ± .003
-163	6	6-3/16	3/32	5.987 ± .035	.103 ± .003
-164	6-1/4	6-7/16	3/32	6.237 ± .040	.103 ± .003
-165	6-1/2	6-11/16	3/32	6.487 ± .040	.103 ± .003
-166	6-3/4	6-15/16	3/32	6.737 ± .040	.103 ± .003
-167	7	7-3/16	3/32	6.987 ± .040	.103 ± .003
-168	7-1/4	7-7/16	3/32	7.237 ± .045	.103 ± .003
-169	7-1/2	7-11/16	3/32	7.487 ± .045	.103 ± .003
-170	7-3/4	7-15/16	3/32	7.737 ± .045	.103 ± .003
-171	8	8-3/16	3/32	7.987 ± .045	.103 ± .003
-172	8-1/4	8-7/16	3/32	8.237 ± .050	.103 ± .003
-173	8-1/2	8-11/16	3/32	8.487 ± .050	.103 ± .003
-174	8-3/4	8-15/16	3/32	8.737 ± .050	.103 ± .003
-175	9	9-3/16	3/32	8.987 ± .050	.103 ± .003
-176	9-1/4	9-7/16	3/32	9.237 ± .055	.103 ± .003
-177	9-1/2	9-11/16	3/32	9.487 ± .055	.103 ± .003
-178	9-3/4	9-15/16	3/32	9.737 ± .055	.103 ± .003
1/8 - CROSS SECTION					
-201	3/16	7/16	1/8	.171 ± .005	.139 ± .004
-202	1/4	1/2	1/8	.234 ± .005	.139 ± .004
-203	5/16	9/16	1/8	.296 ± .005	.139 ± .004
-204	3/8	5/8	1/8	.359 ± .005	.139 ± .004
-205	7/16	11/16	1/8	.421 ± .005	.139 ± .004
-206	1/2	3/4	1/8	.484 ± .005	.139 ± .004
-207	9/16	13/16	1/8	.546 ± .007	.139 ± .004
-208	5/8	7/8	1/8	.609 ± .009	.139 ± .004
-209	11/16	15/16	1/8	.671 ± .009	.139 ± .004
-210	3/4	1	1/8	.734 ± .010	.139 ± .004
-211	13/16	1-1/16	1/8	.796 ± .010	.139 ± .004
-212	7/8	1-1/8	1/8	.859 ± .010	.139 ± .004
-213	15/16	1-3/16	1/8	.921 ± .010	.139 ± .004
-214	1	1-1/4	1/8	.984 ± .010	.139 ± .004
-215	1-1/16	1-5/16	1/8	1.046 ± .010	.139 ± .004
-216	1-1/8	1-3/8	1/8	1.109 ± .012	.139 ± .004
-217	1-3/16	1-7/16	1/8	1.171 ± .012	.139 ± .004
-218	1-1/4	1-1/2	1/8	1.234 ± .012	.139 ± .004
-219	1-5/16	1-9/16	1/8	1.296 ± .012	.139 ± .004
-220	1-3/8	1-5/8	1/8	1.359 ± .012	.139 ± .004
-221	1-7/16	1-11/16	1/8	1.421 ± .012	.139 ± .004
-222	1-1/2	1-3/4	1/8	1.484 ± .015	.139 ± .004
-223	1-5/8	1-7/8	1/8	1.609 ± .015	.139 ± .004
-224	1-3/4	2	1/8	1.734 ± .015	.139 ± .004
-225	1-7/8	2-1/8	1/8	1.859 ± .018	.139 ± .004
-226	2	2-1/4	1/8	1.984 ± .018	.139 ± .004
-227	2-1/8	2-3/8	1/8	2.109 ± .018	.139 ± .004

DASH NUMBER	NOMINAL SIZE ID	NOMINAL SIZE OD	NOMINAL SIZE C/S	ACTUAL SIZE ID	ACTUAL SIZE C/S
1/8 - CROSS SECTION					
-228	2-1/4	2-1/2	1/8	2.234 ± .020	.139 ± .004
-229	2-3/8	2-5/8	1/8	2.359 ± .020	.139 ± .004
-230	2-1/2	2-3/4	1/8	2.484 ± .020	.139 ± .004
-231	2-5/8	2-7/8	1/8	2.609 ± .020	.139 ± .004
-232	2-3/4	3	1/8	2.734 ± .024	.139 ± .004
-233	2-7/8	3-1/8	1/8	2.859 ± .024	.139 ± .004
-234	3	3-1/4	1/8	2.984 ± .024	.139 ± .004
-235	3-1/8	3-3/8	1/8	3.109 ± .024	.139 ± .004
-236	3-1/4	3-1/2	1/8	3.234 ± .024	.139 ± .004
-237	3-3/8	3-5/8	1/8	3.359 ± .024	.139 ± .004
-238	3-1/2	3-3/4	1/8	3.484 ± .024	.139 ± .004
-239	3-5/8	3-7/8	1/8	3.609 ± .028	.139 ± .004
-240	3-3/4	4	1/8	3.734 ± .028	.139 ± .004
-241	3-7/8	4-1/8	1/8	3.859 ± .028	.139 ± .004
-242	4	4-1/4	1/8	3.984 ± .028	.139 ± .004
-243	4-1/8	4-3/8	1/8	4.109 ± .028	.139 ± .004
-244	4-1/4	4-1/2	1/8	4.234 ± .030	.139 ± .004
-245	4-3/8	4-5/8	1/8	4.359 ± .030	.139 ± .004
-246	4-1/2	4-3/4	1/8	4.484 ± .030	.139 ± .004
-247	4-5/8	4-7/8	1/8	4.609 ± .030	.139 ± .004
-248	4-3/4	5	1/8	4.734 ± .030	.139 ± .004
-249	4-7/8	5-1/8	1/8	4.859 ± .035	.139 ± .004
-250	5	5-1/4	1/8	4.984 ± .035	.139 ± .004
-251	5-1/8	5-3/8	1/8	5.109 ± .035	.139 ± .004
-252	5-1/4	5-1/2	1/8	5.234 ± .035	.139 ± .004
-253	5-3/8	5-5/8	1/8	5.359 ± .035	.139 ± .004
-254	5-1/2	5-3/4	1/8	5.484 ± .035	.139 ± .004
-255	5-5/8	5-7/8	1/8	5.609 ± .035	.139 ± .004
-256	5-3/4	6	1/8	5.734 ± .035	.139 ± .004
-257	5-7/8	6-1/8	1/8	5.859 ± .035	.139 ± .004
-258	6	6-1/4	1/8	5.984 ± .035	.139 ± .004
-259	6-1/4	6-1/2	1/8	6.234 ± .040	.139 ± .004
-260	6-1/2	6-3/4	1/8	6.484 ± .040	.139 ± .004
-261	6-3/4	7	1/8	6.734 ± .040	.139 ± .004
-262	7	7-1/4	1/8	6.984 ± .040	.139 ± .004
-263	7-1/4	7-1/2	1/8	7.234 ± .045	.139 ± .004
-264	7-1/2	7-3/4	1/8	7.484 ± .045	.139 ± .004
-265	7-3/4	8	1/8	7.734 ± .045	.139 ± .004
-266	8	8-1/4	1/8	7.984 ± .045	.139 ± .004
-267	8-1/4	8-1/2	1/8	8.234 ± .050	.139 ± .004
-268	8-1/2	8-3/4	1/8	8.484 ± .050	.139 ± .004
-269	8-3/4	9	1/8	8.734 ± .050	.139 ± .004
-270	9	9-1/4	1/8	8.984 ± .050	.139 ± .004
-271	9-1/4	9-1/2	1/8	9.234 ± .055	.139 ± .004
-272	9-1/2	9-3/4	1/8	9.484 ± .055	.139 ± .004
-273	9-3/4	10	1/8	9.734 ± .055	.139 ± .004
-274	10	10-1/4	1/8	9.984 ± .055	.139 ± .004
-275	10-1/2	10-3/4	1/8	10.484 ± .055	.139 ± .004
-276	11	11-1/4	1/8	10.984 ± .065	.139 ± .004
-277	11-1/2	11-3/4	1/8	11.484 ± .065	.139 ± .004
-278	12	12-1/4	1/8	11.984 ± .065	.139 ± .004
-279	13	13-1/4	1/8	12.984 ± .065	.139 ± .004
-280	14	14-1/4	1/8	13.984 ± .065	.139 ± .004

Compound information available on pages 20-37.

Surface Finish: ISO 4287 & Chamfer Information on pages 7-9.
For ISO tolerance charts, refer to pages 12-13.

MFPSEALS®
www.mfpseals.com

O-Ring Standard Sizes - AS568D

DASH NUMBER	NOMINAL SIZE ID	NOMINAL SIZE OD	NOMINAL SIZE C/S	ACTUAL SIZE ID	ACTUAL SIZE C/S
1/8 - CROSS SECTION					
-281	15	15-1/4	1/8	14.984 ± .065	.139 ± .004
-282	16	16-1/4	1/8	15.955 ± .075	.139 ± .004
-283	17	17-1/4	1/8	16.955 ± .080	.139 ± .004
-284	18	18-1/4	1/8	17.955 ± .085	.139 ± .004
3/16 - CROSS SECTION					
-309	7/16	13/16	3/16	.412 ± .005	.210 ± .005
-310	1/2	7/8	3/16	.475 ± .005	.210 ± .005
-311	9/16	15/16	3/16	.537 ± .007	.210 ± .005
-312	5/8	1	3/16	.600 ± .009	.210 ± .005
-313	11/16	1-1/16	3/16	.662 ± .009	.210 ± .005
-314	3/4	1-1/8	3/16	.725 ± .010	.210 ± .005
-315	13/16	1-3/16	3/16	.787 ± .010	.210 ± .005
-316	7/8	1-1/4	3/16	.850 ± .010	.210 ± .005
-317	15/16	1-5/16	3/16	.912 ± .010	.210 ± .005
-318	1	1-3/8	3/16	.975 ± .010	.210 ± .005
-319	1-1/16	1-7/16	3/16	1.037 ± .010	.210 ± .005
-320	1-1/8	1-1/2	3/16	1.100 ± .012	.210 ± .005
-321	1-3/16	1-9/16	3/16	1.162 ± .012	.210 ± .005
-322	1-1/4	1-5/8	3/16	1.225 ± .012	.210 ± .005
-323	1-5/16	1-11/16	3/16	1.287 ± .012	.210 ± .005
-324	1-3/8	1-3/4	3/16	1.350 ± .012	.210 ± .005
-325	1-1/2	1-7/8	3/16	1.475 ± .015	.210 ± .005
-326	1-5/8	2	3/16	1.600 ± .015	.210 ± .005
-327	1-3/4	2-1/8	3/16	1.725 ± .015	.210 ± .005
-328	1-7/8	2-1/4	3/16	1.850 ± .015	.210 ± .005
-329	2	2-3/8	3/16	1.975 ± .018	.210 ± .005
-330	2-1/8	2-1/2	3/16	2.100 ± .018	.210 ± .005
-331	2-1/4	2-5/8	3/16	2.225 ± .018	.210 ± .005
-332	2-3/8	2-3/4	3/16	2.350 ± .018	.210 ± .005
-333	2-1/2	2-7/8	3/16	2.475 ± .020	.210 ± .005
-334	2-5/8	3	3/16	2.600 ± .020	.210 ± .005
-335	2-3/4	3-1/8	3/16	2.725 ± .020	.210 ± .005
-336	2-7/8	3-1/4	3/16	2.850 ± .020	.210 ± .005
-337	3	3-3/8	3/16	2.975 ± .024	.210 ± .005
-338	3-1/8	3-1/2	3/16	3.100 ± .024	.210 ± .005
-339	3-1/4	3-5/8	3/16	3.225 ± .024	.210 ± .005
-340	3-3/8	3-3/4	3/16	3.350 ± .024	.210 ± .005
-341	3-1/2	3-7/8	3/16	3.475 ± .024	.210 ± .005
-342	3-5/8	4	3/16	3.600 ± .028	.210 ± .005
-343	3-3/4	4-1/8	3/16	3.725 ± .028	.210 ± .005
-344	3-7/8	4-1/4	3/16	3.850 ± .028	.210 ± .005
-345	4	4-3/8	3/16	3.975 ± .028	.210 ± .005
-346	4-1/8	4-1/2	3/16	4.100 ± .028	.210 ± .005
-347	4-1/4	4-5/8	3/16	4.225 ± .030	.210 ± .005
-348	4-3/8	4-3/4	3/16	4.350 ± .030	.210 ± .005
-349	4-1/2	4-7/8	3/16	4.475 ± .030	.210 ± .005
-350	4-5/8	5	3/16	4.600 ± .030	.210 ± .005
-351	4-3/4	5-1/8	3/16	4.725 ± .030	.210 ± .005
-352	4-7/8	5-1/4	3/16	4.850 ± .030	.210 ± .005
-353	5	5-3/8	3/16	4.975 ± .037	.210 ± .005
-354	5-1/8	5-1/2	3/16	5.100 ± .037	.210 ± .005

DASH NUMBER	NOMINAL SIZE ID	NOMINAL SIZE OD	NOMINAL SIZE C/S	ACTUAL SIZE ID	ACTUAL SIZE C/S
3/16 - CROSS SECTION					
-355	5-1/4	5-5/8	3/16	5.225 ± .037	.210 ± .005
-356	5-3/8	5-3/4	3/16	5.350 ± .037	.210 ± .005
-357	5-1/2	5-7/8	3/16	5.475 ± .037	.210 ± .005
-358	5-5/8	6	3/16	5.600 ± .037	.210 ± .005
-359	5-3/4	6-1/8	3/16	5.725 ± .037	.210 ± .005
-360	5-7/8	6-1/4	3/16	5.850 ± .037	.210 ± .005
-361	6	6-3/8	3/16	5.975 ± .037	.210 ± .005
-362	6-1/4	6-5/8	3/16	6.225 ± .040	.210 ± .005
-363	6-1/2	6-7/8	3/16	6.475 ± .040	.210 ± .005
-364	6-3/4	7-1/8	3/16	6.725 ± .040	.210 ± .005
-365	7	7-3/8	3/16	6.975 ± .040	.210 ± .005
-366	7-1/4	7-5/8	3/16	7.225 ± .045	.210 ± .005
-367	7-1/2	7-7/8	3/16	7.475 ± .045	.210 ± .005
-368	7-3/4	8-1/8	3/16	7.725 ± .045	.210 ± .005
-369	8	8-3/8	3/16	7.975 ± .045	.210 ± .005
-370	8-1/4	8-5/8	3/16	8.225 ± .050	.210 ± .005
-371	8-1/2	8-7/8	3/16	8.475 ± .050	.210 ± .005
-372	8-3/4	9-1/8	3/16	8.725 ± .050	.210 ± .005
-373	9	9-3/8	3/16	8.975 ± .050	.210 ± .005
-374	9-1/4	9-5/8	3/16	9.225 ± .055	.210 ± .005
-375	9-1/2	9-7/8	3/16	9.475 ± .055	.210 ± .005
-376	9-3/4	10-1/8	3/16	9.725 ± .055	.210 ± .005
-377	10	10-3/8	3/16	9.975 ± .055	.210 ± .005
-378	10-1/2	10-7/8	3/16	10.475 ± .060	.210 ± .005
-379	11	11-3/8	3/16	10.975 ± .060	.210 ± .005
-380	11-1/2	11-7/8	3/16	11.475 ± .065	.210 ± .005
-381	12	12-3/8	3/16	11.975 ± .065	.210 ± .005
-382	13	13-3/8	3/16	12.975 ± .065	.210 ± .005
-383	14	14-3/8	3/16	13.975 ± .070	.210 ± .005
-384	15	15-3/8	3/16	14.975 ± .070	.210 ± .005
-385	16	16-3/8	3/16	15.955 ± .075	.210 ± .005
-386	17	17-3/8	3/16	16.955 ± .080	.210 ± .005
-387	18	18-3/8	3/16	17.955 ± .085	.210 ± .005
-388	19	19-3/8	3/16	18.955 ± .090	.210 ± .005
-389	20	20-3/8	3/16	19.955 ± .095	.210 ± .005
-390	21	21-3/8	3/16	20.955 ± .095	.210 ± .005
-391	22	22-3/8	3/16	21.955 ± .100	.210 ± .005
-392	23	23-3/8	3/16	22.940 ± .105	.210 ± .005
-393	24	24-3/8	3/16	23.940 ± .110	.210 ± .005
-394	25	25-3/8	3/16	24.940 ± .115	.210 ± .005
-395	26	26-3/8	3/16	25.940 ± .120	.210 ± .005
1/4 - CROSS SECTION					
-400	1-3/8	1-7/8	1/4	1.350 ± .014	.275 ± .006
-401	1-1/2	2	1/4	1.475 ± .014	.275 ± .006
-402	1-5/8	2-1/8	1/4	1.600 ± .015	.275 ± .006
-403	1-3/4	2-1/4	1/4	1.725 ± .016	.275 ± .006
-404	1-7/8	2-3/8	1/4	1.850 ± .016	.275 ± .006
-405	2	2-1/2	1/4	1.975 ± .017	.275 ± .006
-406	2-1/8	2-5/8	1/4	2.100 ± .018	.275 ± .006
-407	2-1/4	2-3/4	1/4	2.225 ± .018	.275 ± .006
-408	2-3/8	2-7/8	1/4	2.350 ± .020	.275 ± .006

Surface Finish: ISO 4287 & Chamfer Information on pages 7-9.
For ISO tolerance charts, refer to pages 12-13.

Compound information available on pages 20-37.

O-Ring Standard Sizes - AS568D

MFPSEALS
www.mfpseals.com

DASH NUMBER	NOMINAL SIZE ID	NOMINAL SIZE OD	NOMINAL SIZE C/S	ACTUAL SIZE ID	ACTUAL SIZE C/S
1/4 - CROSS SECTION					
-409	2-1/2	3	1/4	2.475 ± .020	.275 ± .006
-410	2-5/8	3-1/8	1/4	2.600 ± .020	.275 ± .006
-411	2-3/4	3-1/4	1/4	2.725 ± .022	.275 ± .006
-412	2-7/8	3-3/8	1/4	2.850 ± .022	.275 ± .006
-413	3	3-1/2	1/4	2.975 ± .024	.275 ± .006
-414	3-1/8	3-5/8	1/4	3.100 ± .024	.275 ± .006
-415	3-1/4	3-3/4	1/4	3.225 ± .024	.275 ± .006
-416	3-3/8	3-7/8	1/4	3.350 ± .026	.275 ± .006
-417	3-1/2	4	1/4	3.475 ± .026	.275 ± .006
-418	3-5/8	4-1/8	1/4	3.600 ± .026	.275 ± .006
-419	3-3/4	4-1/4	1/4	3.725 ± .028	.275 ± .006
-420	3-7/8	3-3/8	1/4	3.850 ± .028	.275 ± .006
-421	4	4-1/2	1/4	3.975 ± .028	.275 ± .006
-422	4-1/8	4-5/8	1/4	4.100 ± .030	.275 ± .006
-423	4-1/4	4-3/4	1/4	4.225 ± .030	.275 ± .006
-424	4-3/8	4-7/8	1/4	4.350 ± .030	.275 ± .006
-425	4-1/2	5	1/4	4.475 ± .033	.275 ± .006
-426	4-5/8	5-1/8	1/4	4.600 ± .033	.275 ± .006
-427	4-3/4	5-1/4	1/4	4.725 ± .033	.275 ± .006
-428	4-7/8	5-3/8	1/4	4.850 ± .033	.275 ± .006
-429	5	5-1/2	1/4	4.975 ± .037	.275 ± .006
-430	5-1/8	5-5/8	1/4	5.100 ± .037	.275 ± .006
-431	5-1/4	5-3/4	1/4	5.225 ± .037	.275 ± .006
-432	5-3/8	5-7/8	1/4	5.350 ± .037	.275 ± .006
-433	5-1/2	6	1/4	5.475 ± .037	.275 ± .006
-434	5-5/8	6-1/8	1/4	5.600 ± .037	.275 ± .006
-435	5-3/4	6-1/4	1/4	5.725 ± .037	.275 ± .006
-436	5-7/8	6-3/8	1/4	5.850 ± .037	.275 ± .006
-437	6	6-1/2	1/4	5.975 ± .037	.275 ± .006
-438	6-1/4	6-3/4	1/4	6.225 ± .040	.275 ± .006
-439	6-1/2	7	1/4	6.475 ± .040	.275 ± .006
-440	6-3/4	7-1/4	1/4	6.725 ± .040	.275 ± .006
-441	7	7-1/2	1/4	6.975 ± .040	.275 ± .006
-442	7-1/4	7-3/4	1/4	7.225 ± .045	.275 ± .006
-443	7-1/2	8	1/4	7.475 ± .045	.275 ± .006
-444	7-3/4	8-1/4	1/4	7.725 ± .045	.275 ± .006
-445	8	8-1/2	1/4	7.975 ± .045	.275 ± .006
-446	8-1/2	9	1/4	8.475 ± .055	.275 ± .006
-447	9	9-1/2	1/4	8.975 ± .055	.275 ± .006
-448	9-1/2	10	1/4	9.475 ± .055	.275 ± .006
-449	10	10-1/2	1/4	9.975 ± .055	.275 ± .006
-450	10-1/2	11	1/4	10.475 ± .060	.275 ± .006
-451	11	11-1/2	1/4	10.975 ± .060	.275 ± .006
-452	11-1/2	12	1/4	11.475 ± .060	.275 ± .006
-453	12	12-1/2	1/4	11.975 ± .060	.275 ± .006
-454	12-1/2	13	1/4	12.475 ± .060	.275 ± .006
-455	13	13-1/2	1/4	12.975 ± .060	.275 ± .006
-456	13-1/2	14	1/4	13.475 ± .070	.275 ± .006
-457	14	14-1/2	1/4	13.975 ± .070	.275 ± .006
-458	14-1/2	15	1/4	14.475 ± .070	.275 ± .006
-459	15	15-1/2	1/4	14.975 ± .070	.275 ± .006
-460	15-1/2	16	1/4	15.475 ± .070	.275 ± .006

DASH NUMBER	NOMINAL SIZE ID	NOMINAL SIZE OD	NOMINAL SIZE C/S	ACTUAL SIZE ID	ACTUAL SIZE C/S
1/4 - CROSS SECTION					
-461	16	16-1/2	1/4	15.955 ± .075	.275 ± .006
-462	16-1/2	17	1/4	16.455 ± .075	.275 ± .006
-463	17	17-1/2	1/4	16.955 ± .080	.275 ± .006
-464	17-1/2	18	1/4	17.455 ± .085	.275 ± .006
-465	18	18-1/2	1/4	17.955 ± .085	.275 ± .006
-466	18-1/2	19	1/4	18.455 ± .085	.275 ± .006
-467	19	19-1/2	1/4	18.955 ± .090	.275 ± .006
-468	19-1/2	20	1/4	19.455 ± .090	.275 ± .006
-469	20	20-1/2	1/4	19.955 ± .095	.275 ± .006
-470	21	21-1/2	1/4	20.955 ± .095	.275 ± .006
-471	22	22-1/2	1/4	21.955 ± .100	.275 ± .006
-472	23	23-1/2	1/4	22.940 ± .105	.275 ± .006
-473	24	24-1/2	1/4	23.940 ± .110	.275 ± .006
-474	25	25-1/2	1/4	24.940 ± .115	.275 ± .006
-475	26	26-1/2	1/4	25.940 ± .120	.275 ± .006

BOSS O-RINGS					
-901	TUBE O.D.	3/32		.185 ± .005	0.056 ± .003
-902		1/8		.239 ± .005	0.064 ± .003
-903		3/16		.301 ± .005	0.064 ± .003
-904		1/4		.351 ± .005	0.072 ± .003
-905		5/16		.414 ± .005	0.072 ± .003
-906		3/8		.468 ± .005	0.078 ± .003
-907		7/16		.530 ± .007	0.082 ± .003
-908		1/2		.644 ± .009	0.087 ± .003
-909		9/16		.706 ± .009	0.097 ± .003
-910		5/8		.755 ± .009	0.097 ± .003
-911		11/16		.863 ± .009	0.116 ± .004
-912		3/4		.924 ± .009	0.116 ± .004
-913		13/16		.986 ± .010	0.116 ± .004
-914		7/8		1.047 ± .010	0.116 ± .004
-916		1		1.171 ± .010	0.116 ± .004
-918		1-1/8		1.355 ± .012	0.116 ± .004
-920		1-1/4		1.475 ± .014	0.118 ± .004
-924		1-1/2		1.720 ± .014	0.118 ± .004
-928		1-3/4		2.090 ± .018	0.118 ± .004
-932		2		2.337 ± .018	0.118 ± .004

Compound information available on pages 20-37.

Surface Finish: ISO 4287 & Chamfer Information on pages 7-9.
For ISO tolerance charts, refer to pages 12-13.

MFPSEALS
www.mfpseals.com

O-Ring - AS568D

A product of MFP Seals.

AS568D - O-RINGS

MFP Seals produces O-Rings in inch and metric sizes. The inch sizes are produced to the AS568D (Aerospace Standard) published by the SAE (Society of Automotive Engineers). These inch size O-Rings are designated by a dash number referenced on the AS568D chart. This standard for O-Rings contains 379 sizes and MFP Seals stocks them in a wide range of materials. A list of available materials appears below.

This information is only to be used as a guide to the selection of seal compounds. Application, as well as temperature, pressures, media, and finishes, should all be considered when choosing seal compounds. Other compounds are available.

MFP PART NUMBER

OR-010N6001

SEAL TYPE | AS568D DASH # | COMPOUND

COMPOUNDS FORMULATED FOR O-RINGS

Compound Name	Designation	Hardness	Color	Temperature Range	
E7101	EPDM	70 Shore A	Black	-50°C to +100°C	(-58°F to +212°F)
E7102	EPDM	80 Shore A	Black	-50°C to +100°C	(-58°F to +212°F)
E7103 (NSF61)	EPDM	70 Shore A	Black	-50°C to +100°C	(-58°F to +212°F)
E7105 (WRAS/NSF61)	EPDM	70 Shore A	Black	-50°C to +150°C	(-58°F to +302°F)
FC7500 - Fluorochem®	FKME	75 Shore A	Black	-22°C to +250°C	(-7°F to +482°F)
FC7510 - Fluorochem®	FKM	75 Shore A	Black	-20°C to +200°C	(-4°F to +392°F)
FC7525 - Fluorochem®	FFKM	75 Shore A	Black	-15°C to +320°C	(+5°F to +608°F)
FC7550 - Fluorochem®	FFKM	75 Shore A	White	-15°C to +320°C	(+5°F to +608°F)
FC7575 - Fluorochem®	FFKM	90 Shore A	Black	-15°C to +320°C	(+5°F to +608°F)
FC7600 - Fluorochem®	FFKM	90 Shore A	Black	0°C to +260°C	(+32°F to +500°F)
FC7625 - Fluorochem®	FFKM	90 Shore A	Black	-4°C to +230°C	(+25°F to +446°F)
FC7650 - Fluorochem®	FFKM	70 Shore A	Black	-20°C to +230°C	(-4°F to +446°F)
FC7675 - Fluorochem®	FFKM	75 Shore A	Black	-4°C to +230°C	(+25°F to +446°F)
FC7700 - Fluorochem®	FFKM	75 Shore A	Black	-7°C to +230°C	(+20°F to +446°F)
FC7725 - Fluorochem®	FFKM	75 Shore A	White	-7°C to +230°C	(+20°F to +446°F)
FC7750 - Fluorochem®	FFKM	75 Shore A	Black	-6°C to +300°C	(+21°F to +570°F)
FC7775 - Fluorochem®	FFKM	75 Shore A	Black	-7°C to +230°C	(+20°F to +446°F)
FC7800 - Fluorochem®	FFKM	75 Shore A	Black	-5°C to +320°C	(+23°F to +608°F)
FS7101	FVMQ	70 Shore A	Blue	-60°C to +200°C	(-76°F to +392°F)
N6001	NBR	70 Shore A	Black	-40°C to +100°C	(-40°F to +212°F)
N6003	NBR	90 Shore A	Black	-20°C to +100°C	(-4°F to +212°F)
N6007	HNBR	70 Shore A	Black	-40°C to +125°C	(-40°F to +257°F)
N6008	HNBR	80 Shore A	Black	-35°C to +150°C	(-31°F to +302°F)
N6009	HNBR	90 Shore A	Black	-30°C to +150°C	(-22°F to +302°F)
N6010	HNBR	70 Shore A	Green	-40°C to +150°C	(-40°F to +302°F)
N6011	HNBR	80 Shore A	Green	-25°C to +150°C	(-13°F to +302°F)
N6012	HNBR	90 Shore A	Green	-20°C to +150°C	(-4°F to +302°F)
S7100*	SIL	70 Shore A	Rust Red	-55°C to +240°C	(-67°F to +464°F)
T1000	PTFE	51-60 Shore D	White	-200°C to +260°C	(-328°F to +500°F)
U6865	TPU	70 Shore A	Natural	-81°C to +100°C	(-115°F to +212°F)

Continued on next page.

O-Ring - AS568D

A product of MFP Seals.

MFPSEALS®
www.mfpseals.com

COMPOUNDS FORMULATED FOR O-RINGS

Compound Name	Designation	Hardness	Color	Temperature Range	
U9251	TPU	90 Shore A	Natural	-54°C to +150°C	(-65°F to +300°F)
V1125 - Aflas®	FKM	80 Shore A	Black	-0°C to +230°C	(+32°F to +446°F)
V7100	FKM	75 Shore A	Black	-20°C to +200°C	(-4°F to +392°F)
V7125	FKM	75 Shore A	Black	-15°C to +200°C	(+5°F to +392°F)
V7150	FKM	75 Shore A	Black	-15°C to +200°C	(+5°F to +392°F)
V7155	FKM	75 Shore A	Brown	-15°C to +200°C	(+5°F to +392°F)
V7165	FKM	90 Shore A	Black	-20°C to +200°C	(-4°F to +392°F)
V7175	FKM	90 Shore A	Black	-10°C to +200°C	(+14°F to +392°F)
V7200	FKM	90 Shore A	Black	-30°C to +250°C	(-22°F to +482°F)
V7250	FKM	75 Shore A	Green	-15°C to +200°C	(+5°F to +392°F)
V7325 (AMS-R-83485)	FKM-GLT	75 Shore A	Black	-40°C to +200°C	(-40°F to +392°F)
V7350	FEPM	90 Shore A	Black	-20°C to +220°C	(-4°F to +428°F)

*This information is only to be used as a guide to the selection of seal compounds. Application, as well as temperature, pressures, media, and finishes, should all be considered when choosing seal compounds. Other compounds may be available based on application. This is not a complete list of available compounds. For more information contact MFP Seals at sales@mfpseals.com or (248) 585-8170. Fluorochem® (2012) and Ultraflex® (2011) are registered trademarks of Martin Fluid Power Co., Inc. *FDA Grade w/o Certification. AFLAS® is a registered trademark of the Asahi Glass Co., Ltd.*

O-Ring - PTFE

A product of MFP Seals.

PTFE O-RINGS

Polytetrafluoroethylene (PTFE) O-Rings are chemically inert and used in applications where an elastomeric O-Ring would fail. As a rigid material, PTFE O-Rings can only be used in static applications. Common applications would be chemical, pharmaceutical & medical.

The standard compound for this seal is T1000.

MFP PART NUMBERS

OR-210T1000

SEAL TYPE — AS568D DASH # — COMPOUND

Virgin PTFE O-Rings are available in standard AS568D sizes.

Please refer to the appropriate dash number from the charts on pages 41 to 44.

For more information on the available compounds or coatings, please contact your MFP Seals' Sales Representative.

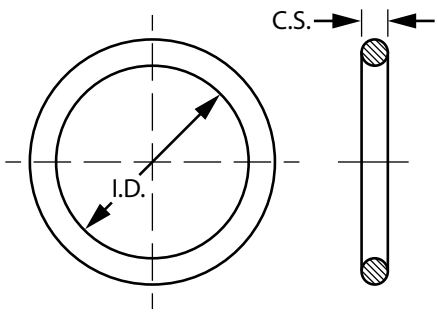

Compound information available on pages 20-37.

Surface Finish: ISO 4287 & Chamfer Information on pages 7-9.
For ISO tolerance charts, refer to pages 12-13.

MFPSEALS®
www.mfpseals.com

O-Ring - Encapsulated

A product of MFP Seals.

ENCAPSULATED O-RINGS

Encapsulated O-Rings consist of an elastomeric material most often Fluorocarbon rubber (FKM) or Silicone (VMQ) that is encapsulated with FEP. The FEP coating provides increased chemical, temperature and wear resistance that would otherwise not be achievable with the base compound alone.

The available compound and coating combinations are:

O-Ring Compound	*Description*
TES	*FEP / Silicone*
TEV	*FEP / Viton®*

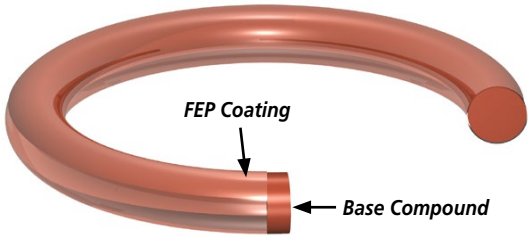

MFP PART NUMBER

OR-210TES

SEAL TYPE — AS568D DASH # — COMPOUND

Virgin PTFE O-Rings are available in standard AS568D sizes. For more information on the available compounds or coatings, please contact your MFP Seals' Sales Representative.

DASH NUMBER	NOMINAL SIZE ID	NOMINAL SIZE OD	NOMINAL SIZE C/S	ACTUAL SIZE ID	ACTUAL SIZE C/S
1/32 - CROSS SECTION					
-001	1/32	3/32	1/32	.029 ± .004	.040 ± .003
3/64 - CROSS SECTION					
-002	3/64	9/64	3/64	.042 ± .004	.050 ± .003
1/16 - CROSS SECTION					
-003	1/16	3/16	1/16	.056 ± .004	.060 ± .003
-004	5/64	13/64	1/16	.070 ± .005	.070 ± .003
-005	3/32	7/32	1/16	.101 ± .005	.070 ± .003
-006	1/8	1/4	1/16	.114 ± .005	.070 ± .003
-007	5/32	9/32	1/16	.145 ± .005	.070 ± .003
-008	3/16	5/16	1/16	.176 ± .005	.070 ± .003
-009	7/32	11/32	1/16	.208 ± .005	.070 ± .003
-010	1/4	3/8	1/16	.239 ± .005	.070 ± .003
-011	5/16	7/16	1/16	.301 ± .005	.070 ± .003
-012	3/8	1/2	1/16	.364 ± .005	.070 ± .003
-013	7/16	9/16	1/16	.426 ± .005	.070 ± .003
-014	1/2	5/8	1/16	.489 ± .005	.070 ± .003
-015	9/16	11/16	1/16	.551 ± .007	.070 ± .003
-016	5/8	3/4	1/16	.614 ± .009	.070 ± .003
-017	11/16	13/16	1/16	.676 ± .009	.070 ± .003
-018	3/4	7/8	1/16	.739 ± .009	.070 ± .003
-019	13/16	15/16	1/16	.801 ± .009	.070 ± .003
-020	7/8	1	1/16	.864 ± .009	.070 ± .003
-021	15/16	1-1/16	1/16	.926 ± .009	.070 ± .003
-022	1	1-1/8	1/16	.989 ± .010	.070 ± .003
-023	1-1/16	1-3/16	1/16	1.051 ± .010	.070 ± .003
-024	1-1/8	1-1/4	1/16	1.114 ± .010	.070 ± .003
-025	1-3/16	1-5/16	1/16	1.176 ± .011	.070 ± .003
-026	1-1/4	1-3/8	1/16	1.239 ± .011	.070 ± .003
-027	1-5/16	1-7/16	1/16	1.301 ± .011	.070 ± .003
-028	1-3/8	1-1/2	1/16	1.364 ± .013	.070 ± .003
-029	1-1/2	1-5/8	1/16	1.489 ± .013	.070 ± .003
-030	1-5/8	1-3/4	1/16	1.614 ± .013	.070 ± .003
-031	1-3/4	1-7/8	1/16	1.739 ± .015	.070 ± .003
-032	1-7/8	2	1/16	1.864 ± .015	.070 ± .003
-033	2	2-1/8	1/16	1.989 ± .018	.070 ± .003

DASH NUMBER	NOMINAL SIZE ID	NOMINAL SIZE OD	NOMINAL SIZE C/S	ACTUAL SIZE ID	ACTUAL SIZE C/S
1/16 - CROSS SECTION					
-034	2-1/8	2-1/4	1/16	2.114 ± .018	.070 ± .003
-035	2-1/4	2-3/8	1/16	2.239 ± .018	.070 ± .003
-036	2-3/8	2-1/2	1/16	2.364 ± .018	.070 ± .003
-037	2-1/2	2-5/8	1/16	2.489 ± .018	.070 ± .003
-038	2-5/8	2-3/4	1/16	2.614 ± .020	.070 ± .003
-039	2-3/4	2-7/8	1/16	2.739 ± .020	.070 ± .003
-040	2-7/8	3	1/16	2.864 ± .020	.070 ± .003
-041	3	3-1/8	1/16	2.989 ± .024	.070 ± .003
-042	3-1/4	3-3/8	1/16	3.239 ± .024	.070 ± .003
-043	3-1/2	3-5/8	1/16	3.489 ± .024	.070 ± .003
-044	3-3/4	3-7/8	1/16	3.739 ± .027	.070 ± .003
-045	4	4-1/8	1/16	3.989 ± .027	.070 ± .003
-046	4-1/4	4-3/8	1/16	4.239 ± .030	.070 ± .003
-047	4-1/2	4-5/8	1/16	4.489 ± .030	.070 ± .003
-048	4-3/4	4-7/8	1/16	4.739 ± .030	.070 ± .003
-049	5	5-1/8	1/16	4.989 ± .037	.070 ± .003
-050	5-1/4	5-3/8	1/16	5.239 ± .037	.070 ± .003
3/32 - CROSS SECTION					
-102	1/16	1/4	3/32	.049 ± .005	.103 ± .003
-103	3/32	9/32	3/32	.081 ± .005	.103 ± .003
-104	1/8	5/16	3/32	.112 ± .005	.103 ± .003
-105	5/32	11/32	3/32	.143 ± .005	.103 ± .003
-106	3/16	3/8	3/32	.174 ± .005	.103 ± .003
-107	7/32	13/32	3/32	.206 ± .005	.103 ± .003
-108	1/4	7/16	3/32	.237 ± .005	.103 ± .003
-109	5/16	1/2	3/32	.299 ± .005	.103 ± .003
-110	3/8	9/16	3/32	.362 ± .005	.103 ± .003
-111	7/16	5/8	3/32	.424 ± .005	.103 ± .003
-112	1/2	11/16	3/32	.487 ± .005	.103 ± .003
-113	9/16	3/4	3/32	.549 ± .007	.103 ± .003
-114	5/8	13/16	3/32	.612 ± .009	.103 ± .003
-115	11/16	7/8	3/32	.674 ± .009	.103 ± .003
-116	3/4	15/16	3/32	.737 ± .009	.103 ± .003
-117	13/16	1	3/32	.799 ± .010	.103 ± .003
-118	7/8	1-1/16	3/32	.862 ± .010	.103 ± .003

Surface Finish: ISO 4287 & Chamfer Information on pages 7-9.
For ISO tolerance charts, refer to pages 12-13.

Compound information available on pages 20-37.

O-Ring - Encapsulated

A product of MFP Seals.

MFPSEALS®
www.mfpseals.com

DASH NUMBER	NOMINAL SIZE ID	NOMINAL SIZE OD	NOMINAL SIZE C/S	ACTUAL SIZE ID	ACTUAL SIZE C/S
3/32 - CROSS SECTION					
-119	15/16	1-1/8	3/32	.924 ± .010	.103 ± .003
-120	1	1-3/16	3/32	.987 ± .010	.103 ± .003
-121	1-1/16	1-1/4	3/32	1.049 ± .010	.103 ± .003
-122	1-1/8	1-5/16	3/32	1.112 ± .010	.103 ± .003
-123	1-3/16	1-3/8	3/32	1.174 ± .012	.103 ± .003
-124	1-1/4	1-7/16	3/32	1.237 ± .012	.103 ± .003
-125	1-5/16	1-1/2	3/32	1.299 ± .012	.103 ± .003
-126	1-3/8	1-9/16	3/32	1.362 ± .012	.103 ± .003
-127	1-7/16	1-5/8	3/32	1.424 ± .012	.103 ± .003
-128	1-1/2	1-11/16	3/32	1.487 ± .012	.103 ± .003
-129	1-9/16	1-3/4	3/32	1.549 ± .015	.103 ± .003
-130	1-5/8	1-13/16	3/32	1.612 ± .015	.103 ± .003
-131	1-11/16	1-7/8	3/32	1.674 ± .015	.103 ± .003
-132	1-3/4	1-15/16	3/32	1.737 ± .015	.103 ± .003
-133	1-13/16	2	3/32	1.799 ± .015	.103 ± .003
-134	1-7/8	2-1/16	3/32	1.862 ± .015	.103 ± .003
-135	1-15/16	2-1/8	3/32	1.925 ± .017	.103 ± .003
-136	2	2-3/16	3/32	1.987 ± .017	.103 ± .003
-137	2-1/16	2-1/4	3/32	2.050 ± .017	.103 ± .003
-138	2-1/8	2-5/16	3/32	2.112 ± .017	.103 ± .003
-139	2-3/16	2-3/8	3/32	2.175 ± .017	.103 ± .003
-140	2-1/4	2-7/16	3/32	2.237 ± .017	.103 ± .003
-141	2-5/16	2-1/2	3/32	2.300 ± .020	.103 ± .003
-142	2-3/8	2-9/16	3/32	2.362 ± .020	.103 ± .003
-143	2-7/16	2-5/8	3/32	2.425 ± .020	.103 ± .003
-144	2-1/2	2-11/16	3/32	2.487 ± .020	.103 ± .003
-145	2-9/16	2-3/4	3/32	2.550 ± .020	.103 ± .003
-146	2-5/8	2-13/16	3/32	2.612 ± .020	.103 ± .003
-147	2-11/16	2-7/8	3/32	2.675 ± .022	.103 ± .003
-148	2-3/4	2-15/16	3/32	2.737 ± .022	.103 ± .003
-149	2-13/16	3	3/32	2.800 ± .022	.103 ± .003
-150	2-7/8	3-1/16	3/32	2.862 ± .022	.103 ± .003
-151	3	3-3/16	3/32	2.987 ± .024	.103 ± .003
-152	3-1/4	3-7/16	3/32	3.237 ± .024	.103 ± .003
-153	3-1/2	3-11/16	3/32	3.487 ± .024	.103 ± .003
-154	3-3/4	3-15/16	3/32	3.737 ± .028	.103 ± .003
-155	4	4-3/16	3/32	3.987 ± .028	.103 ± .003
-156	4-1/4	4-7/16	3/32	4.237 ± .030	.103 ± .003
-157	4-1/2	4-11/16	3/32	4.487 ± .030	.103 ± .003
-158	4-3/4	4-15/16	3/32	4.737 ± .030	.103 ± .003
-159	5	5-3/16	3/32	4.987 ± .035	.103 ± .003
-160	5-1/4	5-7/16	3/32	5.237 ± .035	.103 ± .003
-161	5-1/2	5-11/16	3/32	5.487 ± .035	.103 ± .003
-162	5-3/4	5-15/16	3/32	5.737 ± .035	.103 ± .003
-163	6	6-3/16	3/32	5.987 ± .035	.103 ± .003
-164	6-1/4	6-7/16	3/32	6.237 ± .040	.103 ± .003
-165	6-1/2	6-11/16	3/32	6.487 ± .040	.103 ± .003
-166	6-3/4	6-15/16	3/32	6.737 ± .040	.103 ± .003
-167	7	7-3/16	3/32	6.987 ± .040	.103 ± .003
-168	7-1/4	7-7/16	3/32	7.237 ± .045	.103 ± .003
-169	7-1/2	7-11/16	3/32	7.487 ± .045	.103 ± .003
-170	7-3/4	7-15/16	3/32	7.737 ± .045	.103 ± .003
-171	8	8-3/16	3/32	7.987 ± .045	.103 ± .003
-172	8-1/4	8-7/16	3/32	8.237 ± .050	.103 ± .003
-173	8-1/2	8-11/16	3/32	8.487 ± .050	.103 ± .003
-174	8-3/4	8-15/16	3/32	8.737 ± .050	.103 ± .003
-175	9	9-3/16	3/32	8.987 ± .050	.103 ± .003

DASH NUMBER	NOMINAL SIZE ID	NOMINAL SIZE OD	NOMINAL SIZE C/S	ACTUAL SIZE ID	ACTUAL SIZE C/S
3/32 - CROSS SECTION					
-176	9-1/4	9-7/16	3/32	9.237 ± .055	.103 ± .003
-177	9-1/2	9-11/16	3/32	9.487 ± .055	.103 ± .003
-178	9-3/4	9-15/16	3/32	9.737 ± .055	.103 ± .003
3/32 - CROSS SECTION					
-201	3/16	7/16	1/8	.171 ± .005	.139 ± .004
-202	1/4	1/2	1/8	.234 ± .005	.139 ± .004
-203	5/16	9/16	1/8	.296 ± .005	.139 ± .004
-204	3/8	5/8	1/8	.359 ± .005	.139 ± .004
-205	7/16	11/16	1/8	.421 ± .005	.139 ± .004
-206	1/2	3/4	1/8	.484 ± .005	.139 ± .004
-207	9/16	13/16	1/8	.546 ± .007	.139 ± .004
-208	5/8	7/8	1/8	.609 ± .009	.139 ± .004
-209	11/16	15/16	1/8	.671 ± .009	.139 ± .004
-210	3/4	1	1/8	.734 ± .010	.139 ± .004
-211	13/16	1-1/16	1/8	.796 ± .010	.139 ± .004
-212	7/8	1-1/8	1/8	.859 ± .010	.139 ± .004
-213	15/16	1-3/16	1/8	.921 ± .010	.139 ± .004
-214	1	1-1/4	1/8	.984 ± .010	.139 ± .004
-215	1-1/16	1-5/16	1/8	1.046 ± .010	.139 ± .004
-216	1-1/8	1-3/8	1/8	1.109 ± .012	.139 ± .004
-217	1-3/16	1-7/16	1/8	1.171 ± .012	.139 ± .004
-218	1-1/4	1-1/2	1/8	1.234 ± .012	.139 ± .004
-219	1-5/16	1-9/16	1/8	1.296 ± .012	.139 ± .004
-220	1-3/8	1-5/8	1/8	1.359 ± .012	.139 ± .004
-221	1-7/16	1-11/16	1/8	1.421 ± .012	.139 ± .004
-222	1-1/2	1-3/4	1/8	1.484 ± .015	.139 ± .004
-223	1-5/8	1-7/8	1/8	1.609 ± .015	.139 ± .004
-224	1-3/4	2	1/8	1.734 ± .015	.139 ± .004
-225	1-7/8	2-1/8	1/8	1.859 ± .018	.139 ± .004
-226	2	2-1/4	1/8	1.984 ± .018	.139 ± .004
-227	2-1/8	2-3/8	1/8	2.109 ± .018	.139 ± .004
-228	2-1/4	2-1/2	1/8	2.234 ± .020	.139 ± .004
-229	2-3/8	2-5/8	1/8	2.359 ± .020	.139 ± .004
-230	2-1/2	2-3/4	1/8	2.484 ± .020	.139 ± .004
-231	2-5/8	2-7/8	1/8	2.609 ± .020	.139 ± .004
-232	2-3/4	3	1/8	2.734 ± .024	.139 ± .004
-233	2-7/8	3-1/8	1/8	2.859 ± .024	.139 ± .004
-234	3	3-1/4	1/8	2.984 ± .024	.139 ± .004
-235	3-1/8	3-3/8	1/8	3.109 ± .024	.139 ± .004
-236	3-1/4	3-1/2	1/8	3.234 ± .024	.139 ± .004
-237	3-3/8	3-5/8	1/8	3.359 ± .024	.139 ± .004
-238	3-1/2	3-3/4	1/8	3.484 ± .024	.139 ± .004
-239	3-5/8	3-7/8	1/8	3.609 ± .028	.139 ± .004
-240	3-3/4	4	1/8	3.734 ± .028	.139 ± .004
-241	3-7/8	4-1/8	1/8	3.859 ± .028	.139 ± .004
-242	4	4-1/4	1/8	3.984 ± .028	.139 ± .004
-243	4-1/8	4-3/8	1/8	4.109 ± .028	.139 ± .004
-244	4-1/4	4-1/2	1/8	4.234 ± .030	.139 ± .004
-245	4-3/8	4-5/8	1/8	4.359 ± .030	.139 ± .004
-246	4-1/2	4-3/4	1/8	4.484 ± .030	.139 ± .004
-247	4-5/8	4-7/8	1/8	4.609 ± .030	.139 ± .004
-248	4-3/4	5	1/8	4.734 ± .030	.139 ± .004
-249	4-7/8	5-1/8	1/8	4.859 ± .035	.139 ± .004
-250	5	5-1/4	1/8	4.984 ± .035	.139 ± .004
-251	5-1/8	5-3/8	1/8	5.109 ± .035	.139 ± .004
-252	5-1/4	5-1/2	1/8	5.234 ± .035	.139 ± .004

Compound information available on pages 20-37.

Surface Finish: ISO 4287 & Chamfer Information on pages 7-9.
For ISO tolerance charts, refer to pages 12-13.

MFPSEALS®
www.mfpseals.com

O-Ring - Encapsulated

A product of MFP Seals.

DASH NUMBER	NOMINAL SIZE ID	NOMINAL SIZE OD	NOMINAL SIZE C/S	ACTUAL SIZE ID	ACTUAL SIZE C/S
1/8 - CROSS SECTION					
-253	5-3/8	5-5/8	1/8	5.359 ± .035	.139 ± .004
-254	5-1/2	5-3/4	1/8	5.484 ± .035	.139 ± .004
-255	5-5/8	5-7/8	1/8	5.609 ± .035	.139 ± .004
-256	5-3/4	6	1/8	5.734 ± .035	.139 ± .004
-257	5-7/8	6-1/8	1/8	5.859 ± .035	.139 ± .004
-258	6	6-1/4	1/8	5.984 ± .035	.139 ± .004
-259	6-1/4	6-1/2	1/8	6.234 ± .040	.139 ± .004
-260	6-1/2	6-3/4	1/8	6.484 ± .040	.139 ± .004
-261	6-3/4	7	1/8	6.734 ± .040	.139 ± .004
-262	7	7-1/4	1/8	6.984 ± .040	.139 ± .004
-263	7-1/4	7-1/2	1/8	7.234 ± .045	.139 ± .004
-264	7-1/2	7-3/4	1/8	7.484 ± .045	.139 ± .004
-265	7-3/4	8	1/8	7.734 ± .045	.139 ± .004
-266	8	8-1/4	1/8	7.984 ± .045	.139 ± .004
-267	8-1/4	8-1/2	1/8	8.234 ± .050	.139 ± .004
-268	8-1/2	8-3/4	1/8	8.484 ± .050	.139 ± .004
-269	8-3/4	9	1/8	8.734 ± .050	.139 ± .004
-270	9	9-1/4	1/8	8.984 ± .050	.139 ± .004
-271	9-1/4	9-1/2	1/8	9.234 ± .055	.139 ± .004
-272	9-1/2	9-3/4	1/8	9.484 ± .055	.139 ± .004
-273	9-3/4	10	1/8	9.734 ± .055	.139 ± .004
-274	10	10-1/4	1/8	9.984 ± .055	.139 ± .004
-275	10-1/2	10-3/4	1/8	10.484 ± .055	.139 ± .004
-276	11	11-1/4	1/8	10.984 ± .065	.139 ± .004
-277	11-1/2	11-3/4	1/8	11.484 ± .065	.139 ± .004
-278	12	12-1/4	1/8	11.984 ± .065	.139 ± .004
-279	13	13-1/4	1/8	12.984 ± .065	.139 ± .004
-280	14	14-1/4	1/8	13.984 ± .065	.139 ± .004
-281	15	15-1/4	1/8	14.984 ± .065	.139 ± .004
-282	16	16-1/4	1/8	15.955 ± .075	.139 ± .004
-283	17	17-1/4	1/8	16.955 ± .080	.139 ± .004
-284	18	18-1/4	1/8	17.955 ± .085	.139 ± .004
3/16- CROSS SECTION					
-309	7/16	13/16	3/16	.412 ± .005	.210 ± .005
-310	1/2	7/8	3/16	.475 ± .005	.210 ± .005
-311	9/16	15/16	3/16	.537 ± .007	.210 ± .005
-312	5/8	1	3/16	.600 ± .009	.210 ± .005
-313	11/16	1-1/16	3/16	.662 ± .009	.210 ± .005
-314	3/4	1-1/8	3/16	.725 ± .010	.210 ± .005
-315	13/16	1-3/16	3/16	.787 ± .010	.210 ± .005
-316	7/8	1-1/4	3/16	.850 ± .010	.210 ± .005
-317	15/16	1-5/16	3/16	.912 ± .010	.210 ± .005
-318	1	1-3/8	3/16	.975 ± .010	.210 ± .005
-319	1-1/16	1-7/16	3/16	1.037 ± .010	.210 ± .005
-320	1-1/8	1-1/2	3/16	1.100 ± .012	.210 ± .005
-321	1-3/16	1-9/16	3/16	1.162 ± .012	.210 ± .005
-322	1-1/4	1-5/8	3/16	1.225 ± .012	.210 ± .005
-323	1-5/16	1-11/16	3/16	1.287 ± .012	.210 ± .005
-324	1-3/8	1-3/4	3/16	1.350 ± .012	.210 ± .005
-325	1-1/2	1-7/8	3/16	1.475 ± .015	.210 ± .005
-326	1-5/8	2	3/16	1.600 ± .015	.210 ± .005
-327	1-3/4	2-1/8	3/16	1.725 ± .015	.210 ± .005
-328	1-7/8	2-1/4	3/16	1.850 ± .015	.210 ± .005
-329	2	2-3/8	3/16	1.975 ± .018	.210 ± .005
-330	2-1/8	2-1/2	3/16	2.100 ± .018	.210 ± .005
-331	2-1/4	2-5/8	3/16	2.225 ± .018	.210 ± .005

DASH NUMBER	NOMINAL SIZE ID	NOMINAL SIZE OD	NOMINAL SIZE C/S	ACTUAL SIZE ID	ACTUAL SIZE C/S
3/16 - CROSS SECTION					
-332	2-3/8	2-3/4	3/16	2.350 ± .018	.210 ± .005
-333	2-1/2	2-7/8	3/16	2.475 ± .020	.210 ± .005
-334	2-5/8	3	3/16	2.600 ± .020	.210 ± .005
-335	2-3/4	3-1/8	3/16	2.725 ± .020	.210 ± .005
-336	2-7/8	3-1/4	3/16	2.850 ± .020	.210 ± .005
-337	3	3-3/8	3/16	2.975 ± .024	.210 ± .005
-338	3-1/8	3-1/2	3/16	3.100 ± .024	.210 ± .005
-339	3-1/4	3-5/8	3/16	3.225 ± .024	.210 ± .005
-340	3-3/8	3-3/4	3/16	3.350 ± .024	.210 ± .005
-341	3-1/2	3-7/8	3/16	3.475 ± .024	.210 ± .005
-342	3-5/8	4	3/16	3.600 ± .028	.210 ± .005
-343	3-3/4	4-1/8	3/16	3.725 ± .028	.210 ± .005
-344	3-7/8	4-1/4	3/16	3.850 ± .028	.210 ± .005
-345	4	4-3/8	3/16	3.975 ± .028	.210 ± .005
-346	4-1/8	4-1/2	3/16	4.100 ± .028	.210 ± .005
-347	4-1/4	4-5/8	3/16	4.225 ± .030	.210 ± .005
-348	4-3/8	4-3/4	3/16	4.350 ± .030	.210 ± .005
-349	4-1/2	4-7/8	3/16	4.475 ± .030	.210 ± .005
-350	4-5/8	5	3/16	4.600 ± .030	.210 ± .005
-351	4-3/4	5-1/8	3/16	4.725 ± .030	.210 ± .005
-352	4-7/8	5-1/4	3/16	4.850 ± .030	.210 ± .005
-353	5	5-3/8	3/16	4.975 ± .037	.210 ± .005
-354	5-1/8	5-1/2	3/16	5.100 ± .037	.210 ± .005
-355	5-1/4	5-5/8	3/16	5.225 ± .037	.210 ± .005
-356	5-3/8	5-3/4	3/16	5.350 ± .037	.210 ± .005
-357	5-1/2	5-7/8	3/16	5.475 ± .037	.210 ± .005
-358	5-5/8	6	3/16	5.600 ± .037	.210 ± .005
-359	5-3/4	6-1/8	3/16	5.725 ± .037	.210 ± .005
-360	5-7/8	6-1/4	3/16	5.850 ± .037	.210 ± .005
-361	6	6-3/8	3/16	5.975 ± .037	.210 ± .005
-362	6-1/4	6-5/8	3/16	6.225 ± .040	.210 ± .005
-363	6-1/2	6-7/8	3/16	6.475 ± .040	.210 ± .005
-364	6-3/4	7-1/8	3/16	6.725 ± .040	.210 ± .005
-365	7	7-3/8	3/16	6.975 ± .040	.210 ± .005
-366	7-1/4	7-5/8	3/16	7.225 ± .045	.210 ± .005
-367	7-1/2	7-7/8	3/16	7.475 ± .045	.210 ± .005
-368	7-3/4	8-1/8	3/16	7.725 ± .045	.210 ± .005
-369	8	8-3/8	3/16	7.975 ± .045	.210 ± .005
-370	8-1/4	8-5/8	3/16	8.225 ± .050	.210 ± .005
-371	8-1/2	8-7/8	3/16	8.475 ± .050	.210 ± .005
-372	8-3/4	9-1/8	3/16	8.725 ± .050	.210 ± .005
-373	9	9-3/8	3/16	8.975 ± .050	.210 ± .005
-374	9-1/4	9-5/8	3/16	9.225 ± .055	.210 ± .005
-375	9-1/2	9-7/8	3/16	9.475 ± .055	.210 ± .005
-376	9-3/4	10-1/8	3/16	9.725 ± .055	.210 ± .005
-377	10	10-3/8	3/16	9.975 ± .055	.210 ± .005
-378	10-1/2	10-7/8	3/16	10.475 ± .060	.210 ± .005
-379	11	11-3/8	3/16	10.975 ± .060	.210 ± .005
-380	11-1/2	11-7/8	3/16	11.475 ± .065	.210 ± .005
-381	12	12-3/8	3/16	11.975 ± .065	.210 ± .005
-382	13	13-3/8	3/16	12.975 ± .065	.210 ± .005
-383	14	14-3/8	3/16	13.975 ± .070	.210 ± .005
-384	15	15-3/8	3/16	14.975 ± .070	.210 ± .005
-385	16	16-3/8	3/16	15.955 ± .075	.210 ± .005
-386	17	17-3/8	3/16	16.955 ± .080	.210 ± .005
-387	18	18-3/8	3/16	17.955 ± .085	.210 ± .005
-388	19	19-3/8	3/16	18.955 ± .090	.210 ± .005

Surface Finish: ISO 4287 & Chamfer Information on pages 7-9.
For ISO tolerance charts, refer to pages 12-13.

Compound information available on pages 20-37.

O-Ring - Encapsulated

A product of MFP Seals.

MFPSEALS®
www.mfpseals.com

DASH NUMBER	NOMINAL SIZE ID	NOMINAL SIZE OD	NOMINAL SIZE C/S	ACTUAL SIZE ID	ACTUAL SIZE C/S
3/16 - CROSS SECTION					
-393	24	24-3/8	3/16	23.940 ± .110	.210 ± .005
-394	25	25-3/8	3/16	24.940 ± .115	.210 ± .005
-395	26	26-3/8	3/16	25.940 ± .120	.210 ± .005
1/4 - CROSS SECTION					
-400	1-3/8	1-7/8	1/4	1.350 ± .014	.275 ± .006
-401	1-1/2	2	1/4	1.475 ± .014	.275 ± .006
-402	1-5/8	2-1/8	1/4	1.600 ± .015	.275 ± .006
-403	1-3/4	2-1/4	1/4	1.725 ± .016	.275 ± .006
-404	1-7/8	2-3/8	1/4	1.850 ± .016	.275 ± .006
-405	2	2-1/2	1/4	1.975 ± .017	.275 ± .006
-406	2-1/8	2-5/8	1/4	2.100 ± .018	.275 ± .006
-407	2-1/4	2-3/4	1/4	2.225 ± .018	.275 ± .006
-408	2-3/8	2-7/8	1/4	2.350 ± .020	.275 ± .006
-409	2-1/2	3	1/4	2.475 ± .020	.275 ± .006
-410	2-5/8	3-1/8	1/4	2.600 ± .020	.275 ± .006
-411	2-3/4	3-1/4	1/4	2.725 ± .022	.275 ± .006
-412	2-7/8	3-3/8	1/4	2.850 ± .022	.275 ± .006
-413	3	3-1/2	1/4	2.975 ± .024	.275 ± .006
-414	3-1/8	3-5/8	1/4	3.100 ± .024	.275 ± .006
-415	3-1/4	3-3/4	1/4	3.225 ± .024	.275 ± .006
-416	3-3/8	3-7/8	1/4	3.350 ± .026	.275 ± .006
-417	3-1/2	4	1/4	3.475 ± .026	.275 ± .006
-418	3-5/8	4-1/8	1/4	3.600 ± .026	.275 ± .006
-419	3-3/4	4-1/4	1/4	3.725 ± .028	.275 ± .006
-420	3-7/8	3-3/8	1/4	3.850 ± .028	.275 ± .006
-421	4	4-1/2	1/4	3.975 ± .028	.275 ± .006
-422	4-1/8	4-5/8	1/4	4.100 ± .030	.275 ± .006
-423	4-1/4	4-3/4	1/4	4.225 ± .030	.275 ± .006
-424	4-3/8	4-7/8	1/4	4.350 ± .030	.275 ± .006
-425	4-1/2	5	1/4	4.475 ± .033	.275 ± .006
-426	4-5/8	5-1/8	1/4	4.600 ± .033	.275 ± .006
-427	4-3/4	5-1/4	1/4	4.725 ± .033	.275 ± .006
-428	4-7/8	5-3/8	1/4	4.850 ± .033	.275 ± .006
-429	5	5-1/2	1/4	4.975 ± .037	.275 ± .006
-430	5-1/8	5-5/8	1/4	5.100 ± .037	.275 ± .006
-431	5-1/4	5-3/4	1/4	5.225 ± .037	.275 ± .006
-432	5-3/8	5-7/8	1/4	5.350 ± .037	.275 ± .006
-433	5-1/2	6	1/4	5.475 ± .037	.275 ± .006
-434	5-5/8	6-1/8	1/4	5.600 ± .037	.275 ± .006
-435	5-3/4	6-1/4	1/4	5.725 ± .037	.275 ± .006
-436	5-7/8	6-3/8	1/4	5.850 ± .037	.275 ± .006
-437	6	6-1/2	1/4	5.975 ± .037	.275 ± .006
-438	6-1/4	6-3/4	1/4	6.225 ± .040	.275 ± .006
-439	6-1/2	7	1/4	6.475 ± .040	.275 ± .006
-440	6-3/4	7-1/4	1/4	6.725 ± .040	.275 ± .006
-441	7	7-1/2	1/4	6.975 ± .040	.275 ± .006
-442	7-1/4	7-3/4	1/4	7.225 ± .045	.275 ± .006
-443	7-1/2	8	1/4	7.475 ± .045	.275 ± .006
-444	7-3/4	8-1/4	1/4	7.725 ± .045	.275 ± .006
-445	8	8-1/2	1/4	7.975 ± .045	.275 ± .006
-446	8-1/2	9	1/4	8.475 ± .055	.275 ± .006
-447	9	9-1/2	1/4	8.975 ± .055	.275 ± .006
-448	9-1/2	10	1/4	9.475 ± .055	.275 ± .006
-449	10	10-1/2	1/4	9.975 ± .055	.275 ± .006
-450	10-1/2	11	1/4	10.475 ± .060	.275 ± .006
-451	11	11-1/2	1/4	10.975 ± .060	.275 ± .006

DASH NUMBER	NOMINAL SIZE ID	NOMINAL SIZE OD	NOMINAL SIZE C/S	ACTUAL SIZE ID	ACTUAL SIZE C/S
1/4 - CROSS SECTION					
-452	11-1/2	12	1/4	11.475 ± .060	.275 ± .006
-453	12	12-1/2	1/4	11.975 ± .060	.275 ± .006
-454	12-1/2	13	1/4	12.475 ± .060	.275 ± .006
-455	13	13-1/2	1/4	12.975 ± .060	.275 ± .006
-456	13-1/2	14	1/4	13.475 ± .070	.275 ± .006
-457	14	14-1/2	1/4	13.975 ± .070	.275 ± .006
-458	14-1/2	15	1/4	14.475 ± .070	.275 ± .006
-459	15	15-1/2	1/4	14.975 ± .070	.275 ± .006
-460	15-1/2	16	1/4	15.475 ± .070	.275 ± .006
-461	16	16-1/2	1/4	15.955 ± .075	.275 ± .006
-462	16-1/2	17	1/4	16.455 ± .075	.275 ± .006
-463	17	17-1/2	1/4	16.955 ± .080	.275 ± .006
-464	17-1/2	18	1/4	17.455 ± .085	.275 ± .006
-465	18	18-1/2	1/4	17.955 ± .085	.275 ± .006
-466	18-1/2	19	1/4	18.455 ± .085	.275 ± .006
-467	19	19-1/2	1/4	18.955 ± .090	.275 ± .006
-468	19-1/2	20	1/4	19.455 ± .090	.275 ± .006
-469	20	20-1/2	1/4	19.955 ± .095	.275 ± .006
-470	21	21-1/2	1/4	20.955 ± .095	.275 ± .006
-471	22	22-1/2	1/4	21.955 ± .100	.275 ± .006
-472	23	23-1/2	1/4	22.940 ± .105	.275 ± .006
-473	24	24-1/2	1/4	23.940 ± .110	.275 ± .006
-474	25	25-1/2	1/4	24.940 ± .115	.275 ± .006
-475	26	26-1/2	1/4	25.940 ± .120	.275 ± .006

BOSS O-RINGS	TUBE O.D.			
-901		3/32	.185 ± .005	0.056 ± .003
-902		1/8	.239 ± .005	0.064 ± .003
-903		3/16	.301 ± .005	0.064 ± .003
-904		1/4	.351 ± .005	0.072 ± .003
-905		5/16	.414 ± .005	0.072 ± .003
-906		3/8	.468 ± .005	0.078 ± .003
-907		7/16	.530 ± .007	0.082 ± .003
-908		1/2	.644 ± .009	0.087 ± .003
-909		9/16	.706 ± .009	0.097 ± .003
-910		5/8	.755 ± .009	0.097 ± .003
-911		11/16	.863 ± .009	0.116 ± .004
-912		3/4	.924 ± .009	0.116 ± .004
-913		13/16	.986 ± .010	0.116 ± .004
-914		7/8	1.047 ± .010	0.116 ± .004
-916		1	1.171 ± .010	0.116 ± .004
-918		1-1/8	1.355 ± .012	0.116 ± .004
-920		1-1/4	1.475 ± .014	0.118 ± .004
-924		1-1/2	1.720 ± .014	0.118 ± .004
-928		1-3/4	2.090 ± .018	0.118 ± .004
-932		2	2.337 ± .018	0.118 ± .004

Compound information available on pages 20-37.

Surface Finish: ISO 4287 & Chamfer Information on pages 7-9.
For ISO tolerance charts, refer to pages 12-13.

MFPSEALS®
www.mfpseals.com

Square Cut Ring

A product of MFP Seals.

SQUARE CUT RING

Square Cut Rings are used for the same function as O-Rings and are directly interchangeable, using the same groove as the AS568D O-Ring. Due to their larger sealing surface, Square Cut Rings can normally handle higher pressures than O-Rings. Square Cut Rings are commonly used for static applications.

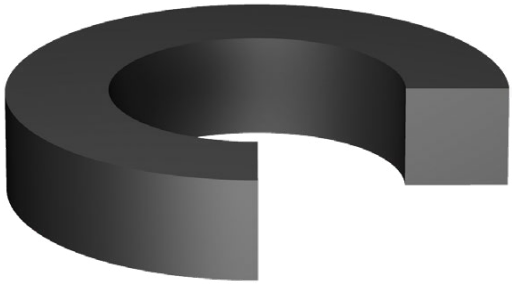

The standard compound for this seal is N6017. Other compounds are also available.

MFP PART NUMBER

SR-006N6017

SEAL TYPE | AS568D DASH # | COMPOUND

DASH NUMBER	NOMINAL SIZE ID	NOMINAL SIZE OD	NOMINAL SIZE C/S	ACTUAL SIZE ID	ACTUAL SIZE C/S
1/16 - CROSS SECTION					
-006	1/8	1/4	1/16	.114 ± .005	.066 ± .005
-007	5/32	9/32	1/16	.145 ± .005	.066 ± .005
-008	3/16	5/16	1/16	.176 ± .005	.066 ± .005
-009	7/32	11/32	1/16	.208 ± .005	.066 ± .005
-010	1/4	3/8	1/16	.239 ± .005	.066 ± .005
-011	5/16	7/16	1/16	.301 ± .005	.066 ± .005
-012	3/8	1/2	1/16	.364 ± .005	.066 ± .005
-013	7/16	9/16	1/16	.426 ± .005	.066 ± .005
-014	1/2	5/8	1/16	.489 ± .005	.066 ± .005
-015	9/16	11/16	1/16	.551 ± .007	.066 ± .005
-016	5/8	3/4	1/16	.614 ± .009	.066 ± .005
-017	11/16	13/16	1/16	.676 ± .009	.066 ± .005
-018	3/4	7/8	1/16	.739 ± .009	.066 ± .005
-019	13/16	15/16	1/16	.801 ± .009	.066 ± .005
-020	7/8	1	1/16	.864 ± .009	.066 ± .005
-021	15/16	1-1/16	1/16	.926 ± .009	.066 ± .005
-022	1	1-1/8	1/16	.989 ± .010	.066 ± .005
-023	1-1/16	1-3/16	1/16	1.051 ± .010	.066 ± .005
-024	1-1/8	1-1/4	1/16	1.114 ± .010	.066 ± .005
-025	1-3/16	1-5/16	1/16	1.176 ± .011	.066 ± .005
-026	1-1/4	1-3/8	1/16	1.239 ± .011	.066 ± .005
-027	1-5/16	1-7/16	1/16	1.301 ± .011	.066 ± .005
-028	1-3/8	1-1/2	1/16	1.364 ± .013	.066 ± .005
-029	1-1/2	1-5/8	1/16	1.489 ± .013	.066 ± .005
-030	1-5/8	1-3/4	1/16	1.614 ± .013	.066 ± .005
-031	1-3/4	1-7/8	1/16	1.739 ± .015	.066 ± .005
-032	1-7/8	2	1/16	1.864 ± .015	.066 ± .005
-033	2	2-1/8	1/16	1.989 ± .018	.066 ± .005
-034	2-1/8	2-1/4	1/16	2.114 ± .018	.066 ± .005
-035	2-1/4	2-3/8	1/16	2.239 ± .018	.066 ± .005
-036	2-3/8	2-1/2	1/16	2.364 ± .018	.066 ± .005

DASH NUMBER	NOMINAL SIZE ID	NOMINAL SIZE OD	NOMINAL SIZE C/S	ACTUAL SIZE ID	ACTUAL SIZE C/S
1/16 - CROSS SECTION					
-037	2-1/2	2-5/8	1/16	2.489 ± .018	.066 ± .005
-038	2-5/8	2-3/4	1/16	2.614 ± .020	.066 ± .005
-039	2-3/4	2-7/8	1/16	2.739 ± .020	.066 ± .005
-040	2-7/8	3	1/16	2.864 ± .020	.066 ± .005
-041	3	3-1/8	1/16	2.989 ± .024	.066 ± .005
-042	3-1/4	3-3/8	1/16	3.239 ± .024	.066 ± .005
-043	3-1/2	3-5/8	1/16	3.489 ± .024	.066 ± .005
-044	3-3/4	3-7/8	1/16	3.739 ± .027	.066 ± .005
-045	4	4-1/8	1/16	3.989 ± .027	.066 ± .005
-046	4-1/4	4-3/8	1/16	4.239 ± .030	.066 ± .005
-047	4-1/2	4-5/8	1/16	4.489 ± .030	.066 ± .005
-048	4-3/4	4-7/8	1/16	4.739 ± .030	.066 ± .005
-049	5	5-1/8	1/16	4.989 ± .037	.066 ± .005
-050	5-1/4	5-3/8	1/16	5.239 ± .037	.066 ± .005
3/32 - CROSS SECTION					
-102	1/16	1/4	3/32	.049 ± .005	.099 ± .005
-103	3/32	9/32	3/32	.081 ± .005	.099 ± .005
-104	1/8	5/16	3/32	.112 ± .005	.099 ± .005
-105	5/32	11/32	3/32	.143 ± .005	.099 ± .005
-106	3/16	3/8	3/32	.174 ± .005	.099 ± .005
-107	7/32	13/32	3/32	.206 ± .005	.099 ± .005
-108	1/4	7/16	3/32	.237 ± .005	.099 ± .005
-109	5/16	1/2	3/32	.299 ± .005	.099 ± .005
-110	3/8	9/16	3/32	.362 ± .005	.099 ± .005
-111	7/16	5/8	3/32	.424 ± .005	.099 ± .005
-112	1/2	11/16	3/32	.487 ± .005	.099 ± .005
-113	9/16	3/4	3/32	.549 ± .007	.099 ± .005
-114	5/8	13/16	3/32	.612 ± .009	.099 ± .005
-115	11/16	7/8	3/32	.674 ± .009	.099 ± .005
-116	3/4	15/16	3/32	.737 ± .009	.099 ± .005
-117	13/16	1	3/32	.799 ± .010	.099 ± .005

Surface Finish: ISO 4287 & Chamfer Information on pages 7-9.
For ISO tolerance charts, refer to pages 12-13.

Compound information available on pages 20-37.

Square Cut Ring

A product of MFP Seals.

MFPSEALS®
www.mfpseals.com

DASH NUMBER	NOMINAL SIZE ID	NOMINAL SIZE OD	NOMINAL SIZE C/S	ACTUAL SIZE ID	ACTUAL SIZE C/S
3/32 - CROSS SECTION					
-118	7/8	1-1/16	3/32	.862 ± .010	.099 ± .005
-119	15/16	1-1/8	3/32	.924 ± .010	.099 ± .005
-120	1	1-3/16	3/32	.987 ± .010	.099 ± .005
-121	1-1/16	1-1/4	3/32	1.049 ± .010	.099 ± .005
-122	1-1/8	1-5/16	3/32	1.112 ± .010	.099 ± .005
-123	1-3/16	1-3/8	3/32	1.174 ± .012	.099 ± .005
-124	1-1/4	1-7/16	3/32	1.237 ± .012	.099 ± .005
-125	1-5/16	1-1/2	3/32	1.299 ± .012	.099 ± .005
-126	1-3/8	1-9/16	3/32	1.362 ± .012	.099 ± .005
-127	1-7/16	1-5/8	3/32	1.424 ± .012	.099 ± .005
-128	1-1/2	1-11/16	3/32	1.487 ± .012	.099 ± .005
-129	1-9/16	1-3/4	3/32	1.549 ± .015	.099 ± .005
-130	1-5/8	1-13/16	3/32	1.612 ± .015	.099 ± .005
-131	1-11/16	1-7/8	3/32	1.674 ± .015	.099 ± .005
-132	1-3/4	1-15/16	3/32	1.737 ± .015	.099 ± .005
-133	1-13/16	2	3/32	1.799 ± .015	.099 ± .005
-134	1-7/8	2-1/16	3/32	1.862 ± .015	.099 ± .005
-135	1-15/16	2-1/8	3/32	1.925 ± .017	.099 ± .005
-136	2	2-3/16	3/32	1.987 ± .017	.099 ± .005
-137	2-1/16	2-1/4	3/32	2.050 ± .017	.099 ± .005
-138	2-1/8	2-5/16	3/32	2.112 ± .017	.099 ± .005
-139	2-3/16	2-3/8	3/32	2.175 ± .017	.099 ± .005
-140	2-1/4	2-7/16	3/32	2.237 ± .017	.099 ± .005
-141	2-5/16	2-1/2	3/32	2.300 ± .020	.099 ± .005
-142	2-3/8	2-9/16	3/32	2.362 ± .020	.099 ± .005
-143	2-7/16	2-5/8	3/32	2.425 ± .020	.099 ± .005
-144	2-1/2	2-11/16	3/32	2.487 ± .020	.099 ± .005
-145	2-9/16	2-3/4	3/32	2.550 ± .020	.099 ± .005
-146	2-5/8	2-13/16	3/32	2.612 ± .020	.099 ± .005
-147	2-11/16	2-7/8	3/32	2.675 ± .022	.099 ± .005
-148	2-3/4	2-15/16	3/32	2.737 ± .022	.099 ± .005
-149	2-13/16	3	3/32	2.800 ± .022	.099 ± .005
-150	2-7/8	3-1/16	3/32	2.862 ± .022	.099 ± .005
-151	3	3-3/16	3/32	2.987 ± .024	.099 ± .005
-152	3-1/4	3-7/16	3/32	3.237 ± .024	.099 ± .005
-153	3-1/2	3-11/16	3/32	3.487 ± .024	.099 ± .005
-154	3-3/4	3-15/16	3/32	3.737 ± .028	.099 ± .005
-155	4	4-3/16	3/32	3.987 ± .028	.099 ± .005
-156	4-1/4	4-7/16	3/32	4.237 ± .030	.099 ± .005
-157	4-1/2	4-11/16	3/32	4.487 ± .030	.099 ± .005
-158	4-3/4	4-15/16	3/32	4.737 ± .030	.099 ± .005
-159	5	5-3/16	3/32	4.987 ± .035	.099 ± .005
-160	5-1/4	5-7/16	3/32	5.237 ± .035	.099 ± .005
-161	5-1/2	5-11/16	3/32	5.487 ± .035	.099 ± .005
-162	5-3/4	5-15/16	3/32	5.737 ± .035	.099 ± .005
-163	6	6-3/16	3/32	5.987 ± .035	.099 ± .005
-164	6-1/4	6-7/16	3/32	6.237 ± .040	.099 ± .005
-165	6-1/2	6-11/16	3/32	6.487 ± .040	.099 ± .005
-166	6-3/4	6-15/16	3/32	6.737 ± .040	.099 ± .005
-167	7	7-3/16	3/32	6.987 ± .040	.099 ± .005
-168	7-1/4	7-7/16	3/32	7.237 ± .045	.099 ± .005
-169	7-1/2	7-11/16	3/32	7.487 ± .045	.099 ± .005
-170	7-3/4	7-15/16	3/32	7.737 ± .045	.099 ± .005

DASH NUMBER	NOMINAL SIZE ID	NOMINAL SIZE OD	NOMINAL SIZE C/S	ACTUAL SIZE ID	ACTUAL SIZE C/S
3/32 - CROSS SECTION					
-171	8	8-3/16	3/32	7.987 ± .045	.099 ± .005
-172	8-1/4	8-7/16	3/32	8.237 ± .050	.099 ± .005
-173	8-1/2	8-11/16	3/32	8.487 ± .050	.099 ± .005
-174	8-3/4	8-15/16	3/32	8.737 ± .050	.099 ± .005
-175	9	9-3/16	3/32	8.987 ± .050	.099 ± .005
-176	9-1/4	9-7/16	3/32	9.237 ± .055	.099 ± .005
-177	9-1/2	9-11/16	3/32	9.487 ± .055	.099 ± .005
-178	9-3/4	9-15/16	3/32	9.737 ± .055	.099 ± .005
1/8 - CROSS SECTION					
-201	3/16	7/16	1/8	.171 ± .005	.134 ± .005
-202	1/4	1/2	1/8	.234 ± .005	.134 ± .005
-203	5/16	9/16	1/8	.296 ± .005	.134 ± .005
-204	3/8	5/8	1/8	.359 ± .005	.134 ± .005
-205	7/16	11/16	1/8	.421 ± .005	.134 ± .005
-206	1/2	3/4	1/8	.484 ± .005	.134 ± .005
-207	9/16	13/16	1/8	.546 ± .007	.134 ± .005
-208	5/8	7/8	1/8	.609 ± .009	.134 ± .005
-209	11/16	15/16	1/8	.671 ± .009	.134 ± .005
-210	3/4	1	1/8	.734 ± .010	.134 ± .005
-211	13/16	1-1/16	1/8	.796 ± .010	.134 ± .005
-212	7/8	1-1/8	1/8	.859 ± .010	.134 ± .005
-213	15/16	1-3/16	1/8	.921 ± .010	.134 ± .005
-214	1	1-1/4	1/8	.984 ± .010	.134 ± .005
-215	1-1/16	1-5/16	1/8	1.046 ± .010	.134 ± .005
-216	1-1/8	1-3/8	1/8	1.109 ± .012	.134 ± .005
-217	1-3/16	1-7/16	1/8	1.171 ± .012	.134 ± .005
-218	1-1/4	1-1/2	1/8	1.234 ± .012	.134 ± .005
-219	1-5/16	1-9/16	1/8	1.296 ± .012	.134 ± .005
-220	1-3/8	1-5/8	1/8	1.359 ± .012	.134 ± .005
-221	1-7/16	1-11/16	1/8	1.421 ± .012	.134 ± .005
-222	1-1/2	1-3/4	1/8	1.484 ± .015	.134 ± .005
-223	1-5/8	1-7/8	1/8	1.609 ± .015	.134 ± .005
-224	1-3/4	2	1/8	1.734 ± .015	.134 ± .005
-225	1-7/8	2-1/8	1/8	1.859 ± .018	.134 ± .005
-226	2	2-1/4	1/8	1.984 ± .018	.134 ± .005
-227	2-1/8	2-3/8	1/8	2.109 ± .018	.134 ± .005
-228	2-1/4	2-1/2	1/8	2.234 ± .020	.134 ± .005
-229	2-3/8	2-5/8	1/8	2.359 ± .020	.134 ± .005
-230	2-1/2	2-3/4	1/8	2.484 ± .020	.134 ± .005
-231	2-5/8	2-7/8	1/8	2.609 ± .020	.134 ± .005
-232	2-3/4	3	1/8	2.734 ± .024	.134 ± .005
-233	2-7/8	3-1/8	1/8	2.859 ± .024	.134 ± .005
-234	3	3-1/4	1/8	2.984 ± .024	.134 ± .005
-235	3-1/8	3-3/8	1/8	3.109 ± .024	.134 ± .005
-236	3-1/4	3-1/2	1/8	3.234 ± .024	.134 ± .005
-237	3-3/8	3-5/8	1/8	3.359 ± .024	.134 ± .005
-238	3-1/2	3-3/4	1/8	3.484 ± .024	.134 ± .005
-239	3-5/8	3-7/8	1/8	3.609 ± .028	.134 ± .005
-240	3-3/4	4	1/8	3.734 ± .028	.134 ± .005
-241	3-7/8	4-1/8	1/8	3.859 ± .028	.134 ± .005
-242	4	4-1/4	1/8	3.984 ± .028	.134 ± .005
-243	4-1/8	4-3/8	1/8	4.109 ± .028	.134 ± .005
-244	4-1/4	4-1/2	1/8	4.234 ± .030	.134 ± .005

Compound information available on pages 20-37.

Surface Finish: ISO 4287 & Chamfer Information on pages 7-9.
For ISO tolerance charts, refer to pages 12-13.

MFPSEALS®
www.mfpseals.com

Square Cut Ring

A product of MFP Seals.

DASH NUMBER	NOMINAL SIZE ID	NOMINAL SIZE OD	NOMINAL SIZE C/S	ACTUAL SIZE ID	ACTUAL SIZE C/S
1/8 - CROSS SECTION					
-245	4-3/8	4-5/8	1/8	4.359 ± .030	.134 ± .005
-246	4-1/2	4-3/4	1/8	4.484 ± .030	.134 ± .005
-247	4-5/8	4-7/8	1/8	4.609 ± .030	.134 ± .005
-248	4-3/4	5	1/8	4.734 ± .030	.134 ± .005
-249	4-7/8	5-1/8	1/8	4.859 ± .035	.134 ± .005
-250	5	5-1/4	1/8	4.984 ± .035	.134 ± .005
-251	5-1/8	5-3/8	1/8	5.109 ± .035	.134 ± .005
-252	5-1/4	5-1/2	1/8	5.234 ± .035	.134 ± .005
-253	5-3/8	5-5/8	1/8	5.359 ± .035	.134 ± .005
-254	5-1/2	5-3/4	1/8	5.484 ± .035	.134 ± .005
-255	5-5/8	5-7/8	1/8	5.609 ± .035	.134 ± .005
-256	5-3/4	6	1/8	5.734 ± .035	.134 ± .005
-257	5-7/8	6-1/8	1/8	5.859 ± .035	.134 ± .005
-258	6	6-1/4	1/8	5.984 ± .035	.134 ± .005
-259	6-1/4	6-1/2	1/8	6.234 ± .040	.134 ± .005
-260	6-1/2	6-3/4	1/8	6.484 ± .040	.134 ± .005
-261	6-3/4	7	1/8	6.734 ± .040	.134 ± .005
-262	7	7-1/4	1/8	6.984 ± .040	.134 ± .005
-263	7-1/4	7-1/2	1/8	7.234 ± .045	.134 ± .005
-264	7-1/2	7-3/4	1/8	7.484 ± .045	.134 ± .005
-265	7-3/4	8	1/8	7.734 ± .045	.134 ± .005
-266	8	8-1/4	1/8	7.984 ± .045	.134 ± .005
-267	8-1/4	8-1/2	1/8	8.234 ± .050	.134 ± .005
-268	8-1/2	8-3/4	1/8	8.484 ± .050	.134 ± .005
-269	8-3/4	9	1/8	8.734 ± .050	.134 ± .005
-270	9	9-1/4	1/8	8.984 ± .050	.134 ± .005
-271	9-1/4	9-1/2	1/8	9.234 ± .055	.134 ± .005
-272	9-1/2	9-3/4	1/8	9.484 ± .055	.134 ± .005
-273	9-3/4	10	1/8	9.734 ± .055	.134 ± .005
-274	10	10-1/4	1/8	9.984 ± .055	.134 ± .005
-275	10-1/2	10-3/4	1/8	10.484 ± .055	.134 ± .005
-276	11	11-1/4	1/8	10.984 ± .065	.134 ± .005
-277	11-1/2	11-3/4	1/8	11.484 ± .065	.134 ± .005
-278	12	12-1/4	1/8	11.984 ± .065	.134 ± .005
-279	13	13-1/4	1/8	12.984 ± .065	.134 ± .005
-280	14	14-1/4	1/8	13.984 ± .065	.134 ± .005
-281	15	15-1/4	1/8	14.984 ± .065	.134 ± .005
-282	16	16-1/4	1/8	15.955 ± .075	.134 ± .005
-283	17	17-1/4	1/8	16.955 ± .080	.134 ± .005
-284	18	18-1/4	1/8	17.955 ± .085	.134 ± .005
3/16 - CROSS SECTION					
-309	7/16	13/16	3/16	.412 ± .007	.203 ± .006
-310	1/2	7/8	3/16	.475 ± .007	.203 ± .006
-311	9/16	15/16	3/16	.537 ± .007	.203 ± .006
-312	5/8	1	3/16	.600 ± .009	.203 ± .006
-313	11/16	1-1/16	3/16	.662 ± .009	.203 ± .006
-314	3/4	1-1/8	3/16	.725 ± .010	.203 ± .006
-315	13/16	1-3/16	3/16	.787 ± .010	.203 ± .006
-316	7/8	1-1/4	3/16	.850 ± .010	.203 ± .006
-317	15/16	1-5/16	3/16	.912 ± .010	.203 ± .006
-318	1	1-3/8	3/16	.975 ± .010	.203 ± .006
-319	1-1/16	1-7/16	3/16	1.037 ± .010	.203 ± .006
-320	1-1/8	1-1/2	3/16	1.100 ± .012	.203 ± .006

DASH NUMBER	NOMINAL SIZE ID	NOMINAL SIZE OD	NOMINAL SIZE C/S	ACTUAL SIZE ID	ACTUAL SIZE C/S
3/16 - CROSS SECTION					
-321	1-3/16	1-9/16	3/16	1.162 ± .012	.203 ± .006
-322	1-1/4	1-5/8	3/16	1.225 ± .012	.203 ± .006
-323	1-5/16	1-11/16	3/16	1.287 ± .012	.203 ± .006
-324	1-3/8	1-3/4	3/16	1.350 ± .012	.203 ± .006
-325	1-1/2	1-7/8	3/16	1.475 ± .015	.203 ± .006
-326	1-5/8	2	3/16	1.600 ± .015	.203 ± .006
-327	1-3/4	2-1/8	3/16	1.725 ± .015	.203 ± .006
-328	1-7/8	2-1/4	3/16	1.850 ± .015	.203 ± .006
-329	2	2-3/8	3/16	1.975 ± .018	.203 ± .006
-330	2-1/8	2-1/2	3/16	2.100 ± .018	.203 ± .006
-331	2-1/4	2-5/8	3/16	2.225 ± .018	.203 ± .006
-332	2-3/8	2-3/4	3/16	2.350 ± .018	.203 ± .006
-333	2-1/2	2-7/8	3/16	2.475 ± .020	.203 ± .006
-334	2-5/8	3	3/16	2.600 ± .020	.203 ± .006
-335	2-3/4	3-1/8	3/16	2.725 ± .020	.203 ± .006
-336	2-7/8	3-1/4	3/16	2.850 ± .020	.203 ± .006
-337	3	3-3/8	3/16	2.975 ± .024	.203 ± .006
-338	3-1/8	3-1/2	3/16	3.100 ± .024	.203 ± .006
-339	3-1/4	3-5/8	3/16	3.225 ± .024	.203 ± .006
-340	3-3/8	3-3/4	3/16	3.350 ± .024	.203 ± .006
-341	3-1/2	3-7/8	3/16	3.475 ± .024	.203 ± .006
-342	3-5/8	4	3/16	3.600 ± .028	.203 ± .006
-343	3-3/4	4-1/8	3/16	3.725 ± .028	.203 ± .006
-344	3-7/8	4-1/4	3/16	3.850 ± .028	.203 ± .006
-345	4	4-3/8	3/16	3.975 ± .028	.203 ± .006
-346	4-1/8	4-1/2	3/16	4.100 ± .028	.203 ± .006
-347	4-1/4	4-5/8	3/16	4.225 ± .030	.203 ± .006
-348	4-3/8	4-3/4	3/16	4.350 ± .030	.203 ± .006
-349	4-1/2	4-7/8	3/16	4.475 ± .030	.203 ± .006
-350	4-5/8	5	3/16	4.600 ± .030	.203 ± .006
-351	4-3/4	5-1/8	3/16	4.725 ± .030	.203 ± .006
-352	4-7/8	5-1/4	3/16	4.850 ± .030	.203 ± .006
-353	5	5-3/8	3/16	4.975 ± .037	.203 ± .006
-354	5-1/8	5-1/2	3/16	5.100 ± .037	.203 ± .006
-355	5-1/4	5-5/8	3/16	5.225 ± .037	.203 ± .006
-356	5-3/8	5-3/4	3/16	5.350 ± .037	.203 ± .006
-357	5-1/2	5-7/8	3/16	5.475 ± .037	.203 ± .006
-358	5-5/8	6	3/16	5.600 ± .037	.203 ± .006
-359	5-3/4	6-1/8	3/16	5.725 ± .037	.203 ± .006
-360	5-7/8	6-1/4	3/16	5.850 ± .037	.203 ± .006
-361	6	6-3/8	3/16	5.975 ± .037	.203 ± .006
-362	6-1/4	6-5/8	3/16	6.225 ± .040	.203 ± .006
-363	6-1/2	6-7/8	3/16	6.475 ± .040	.203 ± .006
-364	6-3/4	7-1/8	3/16	6.725 ± .040	.203 ± .006
-365	7	7-3/8	3/16	6.975 ± .040	.203 ± .006
-366	7-1/4	7-5/8	3/16	7.225 ± .045	.203 ± .006
-367	7-1/2	7-7/8	3/16	7.475 ± .045	.203 ± .006
-368	7-3/4	8-1/8	3/16	7.725 ± .045	.203 ± .006
-369	8	8-3/8	3/16	7.975 ± .045	.203 ± .006
-370	8-1/4	8-5/8	3/16	8.225 ± .050	.203 ± .006
-371	8-1/2	8-7/8	3/16	8.475 ± .050	.203 ± .006
-372	8-3/4	9-1/8	3/16	8.725 ± .050	.203 ± .006
-373	9	9-3/8	3/16	8.975 ± .050	.203 ± .006

Surface Finish: ISO 4287 & Chamfer Information on pages 7-9.
For ISO tolerance charts, refer to pages 12-13.

Compound information available on pages 20-37.

Square Cut Ring

A product of MFP Seals.

MFPSEALS®
www.mfpseals.com

DASH NUMBER	NOMINAL SIZE ID	NOMINAL SIZE OD	NOMINAL SIZE C/S	ACTUAL SIZE ID	ACTUAL SIZE C/S
3/16 - CROSS SECTION					
-374	9-1/4	9-5/8	3/16	9.225 ± .055	.203 ± .006
-375	9-1/2	9-7/8	3/16	9.475 ± .055	.203 ± .006
-376	9-3/4	10-1/8	3/16	9.725 ± .055	.203 ± .006
-377	10	10-3/8	3/16	9.975 ± .055	.203 ± .006
-378	10-1/2	10-7/8	3/16	10.475 ± .060	.203 ± .006
-379	11	11-3/8	3/16	10.975 ± .060	.203 ± .006
-380	11-1/2	11-7/8	3/16	11.475 ± .065	.203 ± .006
-381	12	12-3/8	3/16	11.975 ± .065	.203 ± .006
-382	13	13-3/8	3/16	12.975 ± .065	.203 ± .006
-383	14	14-3/8	3/16	13.975 ± .070	.203 ± .006
-384	15	15-3/8	3/16	14.975 ± .070	.203 ± .006
-385	16	16-3/8	3/16	15.955 ± .075	.203 ± .006
-386	17	17-3/8	3/16	16.955 ± .080	.203 ± .006
-387	18	18-3/8	3/16	17.955 ± .085	.203 ± .006
-388	19	19-3/8	3/16	18.955 ± .090	.203 ± .006
-389	20	20-3/8	3/16	19.955 ± .095	.203 ± .006
-390	21	21-3/8	3/16	20.955 ± .095	.203 ± .006
-391	22	22-3/8	3/16	21.955 ± .100	.203 ± .006
-392	23	23-3/8	3/16	22.940 ± .105	.203 ± .006
-393	24	24-3/8	3/16	23.940 ± .110	.203 ± .006
-394	25	25-3/8	3/16	24.940 ± .115	.203 ± .006
-395	26	26-3/8	3/16	25.940 ± .120	.203 ± .006
1/4 - CROSS SECTION					
-400	1-3/8	1-7/8	1/4	1.350 ± .014	.266 ± .007
-401	1-1/2	2	1/4	1.475 ± .014	.266 ± .007
-402	1-5/8	2-1/8	1/4	1.600 ± .015	.266 ± .007
-403	1-3/4	2-1/4	1/4	1.725 ± .016	.266 ± .007
-404	1-7/8	2-3/8	1/4	1.850 ± .016	.266 ± .007
-405	2	2-1/2	1/4	1.975 ± .017	.266 ± .007
-406	2-1/8	2-5/8	1/4	2.100 ± .018	.266 ± .007
-407	2-1/4	2-3/4	1/4	2.225 ± .018	.266 ± .007
-408	2-3/8	2-7/8	1/4	2.350 ± .020	.266 ± .007
-409	2-1/2	3	1/4	2.475 ± .020	.266 ± .007
-410	2-5/8	3-1/8	1/4	2.600 ± .020	.266 ± .007
-411	2-3/4	3-1/4	1/4	2.725 ± .022	.266 ± .007
-412	2-7/8	3-3/8	1/4	2.850 ± .022	.266 ± .007
-413	3	3-1/2	1/4	2.975 ± .024	.266 ± .007
-414	3-1/8	3-5/8	1/4	3.100 ± .024	.266 ± .007
-415	3-1/4	3-3/4	1/4	3.225 ± .024	.266 ± .007
-416	3-3/8	3-7/8	1/4	3.350 ± .026	.266 ± .007
-417	3-1/2	4	1/4	3.475 ± .026	.266 ± .007
-418	3-5/8	4-1/8	1/4	3.600 ± .026	.266 ± .007
-419	3-3/4	4-1/4	1/4	3.725 ± .028	.266 ± .007
-420	3-7/8	4-3/8	1/4	3.850 ± .028	.266 ± .007
-421	4	4-1/2	1/4	3.975 ± .028	.266 ± .007
-422	4-1/8	4-5/8	1/4	4.100 ± .030	.266 ± .007
-423	4-1/4	4-3/4	1/4	4.225 ± .030	.266 ± .007
-424	4-3/8	4-7/8	1/4	4.350 ± .030	.266 ± .007
-425	4-1/2	5	1/4	4.475 ± .033	.266 ± .007
-426	4-5/8	5-1/8	1/4	4.600 ± .033	.266 ± .007
-427	4-3/4	5-1/4	1/4	4.725 ± .033	.266 ± .007
-428	4-7/8	5-3/8	1/4	4.850 ± .033	.266 ± .007
-429	5	5-1/2	1/4	4.975 ± .037	.266 ± .007

DASH NUMBER	NOMINAL SIZE ID	NOMINAL SIZE OD	NOMINAL SIZE C/S	ACTUAL SIZE ID	ACTUAL SIZE C/S
1/4 - CROSS SECTION					
-430	5-1/8	5-5/8	1/4	5.100 ± .037	.266 ± .007
-431	5-1/4	5-3/4	1/4	5.225 ± .037	.266 ± .007
-432	5-3/8	5-7/8	1/4	5.350 ± .037	.266 ± .007
-433	5-1/2	6	1/4	5.475 ± .037	.266 ± .007
-434	5-5/8	6-1/8	1/4	5.600 ± .037	.266 ± .007
-435	5-3/4	6-1/4	1/4	5.725 ± .037	.266 ± .007
-436	5-7/8	6-3/8	1/4	5.850 ± .037	.266 ± .007
-437	6	6-1/2	1/4	5.975 ± .037	.266 ± .007
-438	6-1/4	6-3/4	1/4	6.225 ± .040	.266 ± .007
-439	6-1/2	7	1/4	6.475 ± .040	.266 ± .007
-440	6-3/4	7-1//4	1/4	6.725 ± .040	.266 ± .007
-441	7	7-1/2	1/4	6.975 ± .040	.266 ± .007
-442	7-1/4	7-3/4	1/4	7.225 ± .045	.266 ± .007
-443	7-1/2	8	1/4	7.475 ± .045	.266 ± .007
-444	7-3/4	8-1/4	1/4	7.725 ± .045	.266 ± .007
-445	8	8-1/2	1/4	7.975 ± .045	.266 ± .007
-446	8-1/2	9	1/4	8.475 ± .055	.266 ± .007
-447	9	9-1/2	1/4	8.975 ± .055	.266 ± .007
-448	9-1/2	10	1/4	9.475 ± .055	.266 ± .007
-449	10	10-1/2	1/4	9.975 ± .055	.266 ± .007
-450	10-1/2	11	1/4	10.475 ± .060	.266 ± .007
-451	11	11-1/2	1/4	10.975 ± .060	.266 ± .007
-452	11-1/2	12	1/4	11.475 ± .060	.266 ± .007
-453	12	12-1/2	1/4	11.975 ± .060	.266 ± .007
-454	12-1/2	13	1/4	12.475 ± .060	.266 ± .007
-455	13	13-1/2	1/4	12.975 ± .060	.266 ± .007
-456	13-1/2	14	1/4	13.475 ± .070	.266 ± .007
-457	14	14-1/2	1/4	13.975 ± .070	.266 ± .007
-458	14-1/2	15	1/4	14.475 ± .070	.266 ± .007
-459	15	15-1/2	1/4	14.975 ± .070	.266 ± .007
-460	15-1/2	16	1/4	15.475 ± .070	.266 ± .007
-461	16	16-1/2	1/4	15.955 ± .075	.266 ± .007
-462	16-1/2	17	1/4	16.455 ± .075	.266 ± .007
-463	17	17-1/2	1/4	16.955 ± .080	.266 ± .007
-464	17-1/2	18	1/4	17.455 ± .085	.266 ± .007
-465	18	18-1/2	1/4	17.955 ± .085	.266 ± .007
-466	18-1/2	19	1/4	18.455 ± .085	.266 ± .007
-467	19	19-1/2	1/4	18.955 ± .090	.266 ± .007
-468	19-1/2	20	1/4	19.455 ± .090	.266 ± .007
-469	20	20-1/2	1/4	19.955 ± .095	.266 ± .007
-470	21	21-1/2	1/4	20.955 ± .095	.266 ± .007
-471	22	22-1/2	1/4	21.955 ± .100	.266 ± .007
-472	23	23-1/2	1/4	22.940 ± .105	.266 ± .007
-473	24	24-1/2	1/4	23.940 ± .110	.266 ± .007
-474	25	25-1/2	1/4	24.940 ± .115	.266 ± .007
-475	26	26-1/2	1/4	25.940 ± .120	.266 ± .007

Compound information available on pages 20-37.

Surface Finish: ISO 4287 & Chamfer Information on pages 7-9.
For ISO tolerance charts, refer to pages 12-13.

MFPSEALS®
www.mfpseals.com

X-Ring
A product of MFP Seals.

X-RINGS

X-Rings are designed to retrofit AS568 O-Ring grooves but offer two contact points on the sealing surface vs. one with an O-Ring. This dual sealing lip feature gives positive sealing with reduced radial squeeze, and thus reduced friction. By reducing the friction you find a reduction in wear, giving the seal a longer service life over the standard O-Ring design. X-Rings are excellent for use in rotary applications and for providing seal stability due to a design that resists twisting in the groove.

The standard compound for this seal is N6014. Other compounds available.

MFP PART NUMBER

XR-004N6014

SEAL TYPE — AS568D DASH # — COMPOUND

For more information about this product, please contact your MFP Seals' Sales Representative.

DASH NUMBER	NOMINAL SIZE ID	NOMINAL SIZE OD	NOMINAL SIZE C/S	ACTUAL SIZE ID	ACTUAL SIZE C/S
3/64 - CROSS SECTION					
-002	3/64	9/64	3/64	.042 ± .004	.050 ± .003
1/16 - CROSS SECTION					
-003	1/16	3/16	1/16	.056 ± .004	.060 ± .003
-004	5/64	13/64	1/16	.070 ± .005	.070 ± .003
-005	3/32	7/32	1/16	.101 ± .005	.070 ± .003
-006	1/8	1/4	1/16	.114 ± .005	.070 ± .003
-007	5/32	9/32	1/16	.145 ± .005	.070 ± .003
-008	3/16	5/16	1/16	.176 ± .005	.070 ± .003
-009	7/32	11/32	1/16	.208 ± .005	.070 ± .003
-010	1/4	3/8	1/16	.239 ± .005	.070 ± .003
-011	5/16	7/16	1/16	.301 ± .005	.070 ± .003
-012	3/8	1/2	1/16	.364 ± .005	.070 ± .003
-013	7/16	9/16	1/16	.426 ± .005	.070 ± .003
-014	1/2	5/8	1/16	.489 ± .005	.070 ± .003
-015	9/16	11/16	1/16	.551 ± .007	.070 ± .003
-016	5/8	3/4	1/16	.614 ± .009	.070 ± .003
-017	11/16	13/16	1/16	.676 ± .009	.070 ± .003
-018	3/4	7/8	1/16	.739 ± .009	.070 ± .003
-019	13/16	15/16	1/16	.801 ± .009	.070 ± .003
-020	7/8	1	1/16	.864 ± .009	.070 ± .003
-021	15/16	1-1/16	1/16	.926 ± .009	.070 ± .003
-022	1	1-1/8	1/16	.989 ± .010	.070 ± .003
-023	1-1/16	1-3/16	1/16	1.051 ± .010	.070 ± .003
-024	1-1/8	1-1/4	1/16	1.114 ± .010	.070 ± .003
-025	1-3/16	1-5/16	1/16	1.176 ± .011	.070 ± .003
-026	1-1/4	1-3/8	1/16	1.239 ± .011	.070 ± .003
-027	1-5/16	1-7/16	1/16	1.301 ± .011	.070 ± .003
-028	1-3/8	1-1/2	1/16	1.364 ± .013	.070 ± .003
-029	1-1/2	1-5/8	1/16	1.489 ± .013	.070 ± .003
-030	1-5/8	1-3/4	1/16	1.614 ± .013	.070 ± .003
-031	1-3/4	1-7/8	1/16	1.739 ± .015	.070 ± .003
-032	1-7/8	2	1/16	1.864 ± .015	.070 ± .003
-033	2	2-1/8	1/16	1.989 ± .018	.070 ± .003

DASH NUMBER	NOMINAL SIZE ID	NOMINAL SIZE OD	NOMINAL SIZE C/S	ACTUAL SIZE ID	ACTUAL SIZE C/S
1/16 - CROSS SECTION					
-034	2-1/8	2-1/4	1/16	2.114 ± .018	.070 ± .003
-035	2-1/4	2-3/8	1/16	2.239 ± .018	.070 ± .003
-036	2-3/8	2-1/2	1/16	2.364 ± .018	.070 ± .003
-037	2-1/2	2-5/8	1/16	2.489 ± .018	.070 ± .003
-038	2-5/8	2-3/4	1/16	2.614 ± .020	.070 ± .003
-039	2-3/4	2-7/8	1/16	2.739 ± .020	.070 ± .003
-040	2-7/8	3	1/16	2.864 ± .020	.070 ± .003
-041	3	3-1/8	1/16	2.989 ± .024	.070 ± .003
-042	3-1/4	3-3/8	1/16	3.239 ± .024	.070 ± .003
-043	3-1/2	3-5/8	1/16	3.489 ± .024	.070 ± .003
-044	3-3/4	3-7/8	1/16	3.739 ± .027	.070 ± .003
-045	4	4-1/8	1/16	3.989 ± .027	.070 ± .003
-046	4-1/4	4-3/8	1/16	4.239 ± .030	.070 ± .003
-047	4-1/2	4-5/8	1/16	4.489 ± .030	.070 ± .003
-048	4-3/4	4-7/8	1/16	4.739 ± .030	.070 ± .003
-049	5	5-1/8	1/16	4.989 ± .037	.070 ± .003
-050	5-1/4	5-3/8	1/16	5.239 ± .037	.070 ± .003
3/32 - CROSS SECTION					
-102	1/16	1/4	3/32	.049 ± .005	.103 ± .003
-103	3/32	9/32	3/32	.081 ± .005	.103 ± .003
-104	1/8	5/16	3/32	.112 ± .005	.103 ± .003
-105	5/32	11/32	3/32	.143 ± .005	.103 ± .003
-106	3/16	3/8	3/32	.174 ± .005	.103 ± .003
-107	7/32	13/32	3/32	.206 ± .005	.103 ± .003
-108	1/4	7/16	3/32	.237 ± .005	.103 ± .003
-109	5/16	1/2	3/32	.299 ± .005	.103 ± .003
-110	3/8	9/16	3/32	.362 ± .005	.103 ± .003
-111	7/16	5/8	3/32	.424 ± .005	.103 ± .003
-112	1/2	11/16	3/32	.487 ± .005	.103 ± .003
-113	9/16	3/4	3/32	.549 ± .007	.103 ± .003
-114	5/8	13/16	3/32	.612 ± .009	.103 ± .003
-115	11/16	7/8	3/32	.674 ± .009	.103 ± .003
-116	3/4	15/16	3/32	.737 ± .009	.103 ± .003

Surface Finish: ISO 4287 & Chamfer Information on pages 7-9.
For ISO tolerance charts, refer to pages 12-13.

Compound information available on pages 20-37.

X-Ring

A product of MFP Seals.

MFPSEALS®
www.mfpseals.com

DASH NUMBER	NOMINAL SIZE ID	NOMINAL SIZE OD	NOMINAL SIZE C/S	ACTUAL SIZE ID	ACTUAL SIZE C/S
3/32 - CROSS SECTION					
-117	13/16	1	3/32	.799 ± .010	.103 ± .003
-118	7/8	1-1/16	3/32	.862 ± .010	.103 ± .003
-119	15/16	1-1/8	3/32	.924 ± .010	.103 ± .003
-120	1	1-3/16	3/32	.987 ± .010	.103 ± .003
-121	1-1/16	1-1/4	3/32	1.049 ± .010	.103 ± .003
-122	1-1/8	1-5/16	3/32	1.112 ± .010	.103 ± .003
-123	1-3/16	1-3/8	3/32	1.174 ± .012	.103 ± .003
-124	1-1/4	1-7/16	3/32	1.237 ± .012	.103 ± .003
-125	1-5/16	1-1/2	3/32	1.299 ± .012	.103 ± .003
-126	1-3/8	1-9/16	3/32	1.362 ± .012	.103 ± .003
-127	1-7/16	1-5/8	3/32	1.424 ± .012	.103 ± .003
-128	1-1/2	1-11/16	3/32	1.487 ± .012	.103 ± .003
-129	1-9/16	1-3/4	3/32	1.549 ± .015	.103 ± .003
-130	1-5/8	1-13/16	3/32	1.612 ± .015	.103 ± .003
-131	1-11/16	1-7/8	3/32	1.674 ± .015	.103 ± .003
-132	1-3/4	1-15/16	3/32	1.737 ± .015	.103 ± .003
-133	1-13/16	2	3/32	1.799 ± .015	.103 ± .003
-134	1-7/8	2-1/16	3/32	1.862 ± .015	.103 ± .003
-135	1-15/16	2-1/8	3/32	1.925 ± .017	.103 ± .003
-136	2	2-3/16	3/32	1.987 ± .017	.103 ± .003
-137	2-1/16	2-1/4	3/32	2.050 ± .017	.103 ± .003
-138	2-1/8	2-5/16	3/32	2.112 ± .017	.103 ± .003
-139	2-3/16	2-3/8	3/32	2.175 ± .017	.103 ± .003
-140	2-1/4	2-7/16	3/32	2.237 ± .017	.103 ± .003
-141	2-5/16	2-1/2	3/32	2.300 ± .020	.103 ± .003
-142	2-3/8	2-9/16	3/32	2.362 ± .020	.103 ± .003
-143	2-7/16	2-5/8	3/32	2.425 ± .020	.103 ± .003
-144	2-1/2	2-11/16	3/32	2.487 ± .020	.103 ± .003
-145	2-9/16	2-3/4	3/32	2.550 ± .020	.103 ± .003
-146	2-5/8	2-13/16	3/32	2.612 ± .020	.103 ± .003
-147	2-11/16	2-7/8	3/32	2.675 ± .022	.103 ± .003
-148	2-3/4	2-15/16	3/32	2.737 ± .022	.103 ± .003
-149	2-13/16	3	3/32	2.800 ± .022	.103 ± .003
-150	2-7/8	3-1/16	3/32	2.862 ± .022	.103 ± .003
-151	3	3-3/16	3/32	2.987 ± .024	.103 ± .003
-152	3-1/4	3-7/16	3/32	3.237 ± .024	.103 ± .003
-153	3-1/2	3-11/16	3/32	3.487 ± .024	.103 ± .003
-154	3-3/4	3-15/16	3/32	3.737 ± .028	.103 ± .003
-155	4	4-3/16	3/32	3.987 ± .028	.103 ± .003
-156	4-1/4	4-7/16	3/32	4.237 ± .030	.103 ± .003
-157	4-1/2	4-11/16	3/32	4.487 ± .030	.103 ± .003
-158	4-3/4	4-15/16	3/32	4.737 ± .030	.103 ± .003
-159	5	5-3/16	3/32	4.987 ± .035	.103 ± .003
-160	5-1/4	5-7/16	3/32	5.237 ± .035	.103 ± .003
-161	5-1/2	5-11/16	3/32	5.487 ± .035	.103 ± .003
-162	5-3/4	5-15/16	3/32	5.737 ± .035	.103 ± .003
-163	6	6-3/16	3/32	5.987 ± .035	.103 ± .003
-164	6-1/4	6-7/16	3/32	6.237 ± .040	.103 ± .003
-165	6-1/2	6-11/16	3/32	6.487 ± .040	.103 ± .003
-166	6-3/4	6-15/16	3/32	6.737 ± .040	.103 ± .003
-167	7	7-3/16	3/32	6.987 ± .040	.103 ± .003
-168	7-1/4	7-7/16	3/32	7.237 ± .045	.103 ± .003
-169	7-1/2	7-11/16	3/32	7.487 ± .045	.103 ± .003
-170	7-3/4	7-15/16	3/32	7.737 ± .045	.103 ± .003
-171	8	8-3/16	3/32	7.987 ± .045	.103 ± .003
-172	8-1/4	8-7/16	3/32	8.237 ± .050	.103 ± .003
-173	8-1/2	8-11/16	3/32	8.487 ± .050	.103 ± .003
-174	8-3/4	8-15/16	3/32	8.737 ± .050	.103 ± .003
-175	9	9-3/16	3/32	8.987 ± .050	.103 ± .003
-176	9-1/4	9-7/16	3/32	9.237 ± .055	.103 ± .003
-177	9-1/2	9-11/16	3/32	9.487 ± .055	.103 ± .003
-178	9-3/4	9-15/16	3/32	9.737 ± .055	.103 ± .003
1/8 - CROSS SECTION					
-201	3/16	7/16	1/8	.171 ± .005	.139 ± .004
-202	1/4	1/2	1/8	.234 ± .005	.139 ± .004
-203	5/16	9/16	1/8	.296 ± .005	.139 ± .004
-204	3/8	5/8	1/8	.359 ± .005	.139 ± .004
-205	7/16	11/16	1/8	.421 ± .005	.139 ± .004
-206	1/2	3/4	1/8	.484 ± .005	.139 ± .004
-207	9/16	13/16	1/8	.546 ± .007	.139 ± .004
-208	5/8	7/8	1/8	.609 ± .009	.139 ± .004
-209	11/16	15/16	1/8	.671 ± .009	.139 ± .004
-210	3/4	1	1/8	.734 ± .010	.139 ± .004
-211	13/16	1-1/16	1/8	.796 ± .010	.139 ± .004
-212	7/8	1-1/8	1/8	.859 ± .010	.139 ± .004
-213	15/16	1-3/16	1/8	.921 ± .010	.139 ± .004
-214	1	1-1/4	1/8	.984 ± .010	.139 ± .004
-215	1-1/16	1-5/16	1/8	1.046 ± .010	.139 ± .004
-216	1-1/8	1-3/8	1/8	1.109 ± .012	.139 ± .004
-217	1-3/16	1-7/16	1/8	1.171 ± .012	.139 ± .004
-218	1-1/4	1-1/2	1/8	1.234 ± .012	.139 ± .004
-219	1-5/16	1-9/16	1/8	1.296 ± .012	.139 ± .004
-220	1-3/8	1-5/8	1/8	1.359 ± .012	.139 ± .004
-221	1-7/16	1-11/16	1/8	1.421 ± .012	.139 ± .004
-222	1-1/2	1-3/4	1/8	1.484 ± .015	.139 ± .004
-223	1-5/8	1-7/8	1/8	1.609 ± .015	.139 ± .004
-224	1-3/4	2	1/8	1.734 ± .015	.139 ± .004
-225	1-7/8	2-1/8	1/8	1.859 ± .018	.139 ± .004
-226	2	2-1/4	1/8	1.984 ± .018	.139 ± .004
-227	2-1/8	2-3/8	1/8	2.109 ± .018	.139 ± .004
-228	2-1/4	2-1/2	1/8	2.234 ± .020	.139 ± .004
-229	2-3/8	2-5/8	1/8	2.359 ± .020	.139 ± .004
-230	2-1/2	2-3/4	1/8	2.484 ± .020	.139 ± .004
-231	2-5/8	2-7/8	1/8	2.609 ± .020	.139 ± .004
-232	2-3/4	3	1/8	2.734 ± .024	.139 ± .004
-233	2-7/8	3-1/8	1/8	2.859 ± .024	.139 ± .004
-234	3	3-1/4	1/8	2.984 ± .024	.139 ± .004
-235	3-1/8	3-3/8	1/8	3.109 ± .024	.139 ± .004
-236	3-1/4	3-1/2	1/8	3.234 ± .024	.139 ± .004
-237	3-3/8	3-5/8	1/8	3.359 ± .024	.139 ± .004
-238	3-1/2	3-3/4	1/8	3.484 ± .024	.139 ± .004
-239	3-5/8	3-7/8	1/8	3.609 ± .028	.139 ± .004
-240	3-3/4	4	1/8	3.734 ± .028	.139 ± .004
-241	3-7/8	4-1/8	1/8	3.859 ± .028	.139 ± .004
-242	4	4-1/4	1/8	3.984 ± .028	.139 ± .004

Compound information available on pages 20-37.

Surface Finish: ISO 4287 & Chamfer Information on pages 7-9.
For ISO tolerance charts, refer to pages 12-13.

DASH NUMBER	NOMINAL SIZE ID	NOMINAL SIZE OD	NOMINAL SIZE C/S	ACTUAL SIZE ID	ACTUAL SIZE C/S
1/8 - CROSS SECTION					
-243	4-1/8	4-3/8	1/8	4.109 ± .028	.139 ± .004
-244	4-1/4	4-1/2	1/8	4.234 ± .030	.139 ± .004
-245	4-3/8	4-5/8	1/8	4.359 ± .030	.139 ± .004
-246	4-1/2	4-3/4	1/8	4.484 ± .030	.139 ± .004
-247	4-5/8	4-7/8	1/8	4.609 ± .030	.139 ± .004
-248	4-3/4	5	1/8	4.734 ± .030	.139 ± .004
-249	4-7/8	5-1/8	1/8	4.859 ± .035	.139 ± .004
-250	5	5-1/4	1/8	4.984 ± .035	.139 ± .004
-251	5-1/8	5-3/8	1/8	5.109 ± .035	.139 ± .004
-252	5-1/4	5-1/2	1/8	5.234 ± .035	.139 ± .004
-253	5-3/8	5-5/8	1/8	5.359 ± .035	.139 ± .004
-254	5-1/2	5-3/4	1/8	5.484 ± .035	.139 ± .004
-255	5-5/8	5-7/8	1/8	5.609 ± .035	.139 ± .004
-256	5-3/4	6	1/8	5.734 ± .035	.139 ± .004
-257	5-7/8	6-1/8	1/8	5.859 ± .035	.139 ± .004
-258	6	6-1/4	1/8	5.984 ± .035	.139 ± .004
-259	6-1/4	6-1/2	1/8	6.234 ± .040	.139 ± .004
-260	6-1/2	6-3/4	1/8	6.484 ± .040	.139 ± .004
-261	6-3/4	7	1/8	6.734 ± .040	.139 ± .004
-262	7	7-1/4	1/8	6.984 ± .040	.139 ± .004
-263	7-1/4	7-1/2	1/8	7.234 ± .045	.139 ± .004
-264	7-1/2	7-3/4	1/8	7.484 ± .045	.139 ± .004
-265	7-3/4	8	1/8	7.734 ± .045	.139 ± .004
-266	8	8-1/4	1/8	7.984 ± .045	.139 ± .004
-267	8-1/4	8-1/2	1/8	8.234 ± .050	.139 ± .004
-268	8-1/2	8-3/4	1/8	8.484 ± .050	.139 ± .004
-269	8-3/4	9	1/8	8.734 ± .050	.139 ± .004
-270	9	9-1/4	1/8	8.984 ± .050	.139 ± .004
-271	9-1/4	9-1/2	1/8	9.234 ± .055	.139 ± .004
-272	9-1/2	9-3/4	1/8	9.484 ± .055	.139 ± .004
-273	9-3/4	10	1/8	9.734 ± .055	.139 ± .004
-274	10	10-1/4	1/8	9.984 ± .055	.139 ± .004
-275	10-1/2	10-3/4	1/8	10.484 ± .055	.139 ± .004
-276	11	11-1/4	1/8	10.984 ± .065	.139 ± .004
-277	11-1/2	11-3/4	1/8	11.484 ± .065	.139 ± .004
-278	12	12-1/4	1/8	11.984 ± .065	.139 ± .004
-279	13	13-1/4	1/8	12.984 ± .065	.139 ± .004
-280	14	14-1/4	1/8	13.984 ± .065	.139 ± .004
-281	15	15-1/4	1/8	14.984 ± .065	.139 ± .004
-282	16	16-1/4	1/8	15.955 ± .075	.139 ± .004
-283	17	17-1/4	1/8	16.955 ± .080	.139 ± .004
-284	18	18-1/4	1/8	17.955 ± .085	.139 ± .004
3/16 - CROSS SECTION					
-309	7/16	13/16	3/16	.412 ± .005	.210 ± .005
-310	1/2	7/8	3/16	.475 ± .005	.210 ± .005
-311	9/16	15/16	3/16	.537 ± .007	.210 ± .005
-312	5/8	1	3/16	.600 ± .009	.210 ± .005
-313	11/16	1-1/16	3/16	.662 ± .009	.210 ± .005
-314	3/4	1-1/8	3/16	.725 ± .010	.210 ± .005
-315	13/16	1-3/16	3/16	.787 ± .010	.210 ± .005
-316	7/8	1-1/4	3/16	.850 ± .010	.210 ± .005
-317	15/16	1-5/16	3/16	.912 ± .010	.210 ± .005

DASH NUMBER	NOMINAL SIZE ID	NOMINAL SIZE OD	NOMINAL SIZE C/S	ACTUAL SIZE ID	ACTUAL SIZE C/S
3/16 - CROSS SECTION					
-318	1	1-3/8	3/16	.975 ± .010	.210 ± .005
-319	1-1/16	1-7/16	3/16	1.037 ± .010	.210 ± .005
-320	1-1/8	1-1/2	3/16	1.100 ± .012	.210 ± .005
-321	1-3/16	1-9/16	3/16	1.162 ± .012	.210 ± .005
-322	1-1/4	1-5/8	3/16	1.225 ± .012	.210 ± .005
-323	1-5/16	1-11/16	3/16	1.287 ± .012	.210 ± .005
-324	1-3/8	1-3/4	3/16	1.350 ± .012	.210 ± .005
-325	1-1/2	1-7/8	3/16	1.475 ± .015	.210 ± .005
-326	1-5/8	2	3/16	1.600 ± .015	.210 ± .005
-327	1-3/4	2-1/8	3/16	1.725 ± .015	.210 ± .005
-328	1-7/8	2-1/4	3/16	1.850 ± .015	.210 ± .005
-329	2	2-3/8	3/16	1.975 ± .018	.210 ± .005
-330	2-1/8	2-1/2	3/16	2.100 ± .018	.210 ± .005
-331	2-1/4	2-5/8	3/16	2.225 ± .018	.210 ± .005
-332	2-3/8	2-3/4	3/16	2.350 ± .018	.210 ± .005
-333	2-1/2	2-7/8	3/16	2.475 ± .020	.210 ± .005
-334	2-5/8	3	3/16	2.600 ± .020	.210 ± .005
-335	2-3/4	3-1/8	3/16	2.725 ± .020	.210 ± .005
-336	2-7/8	3-1/4	3/16	2.850 ± .020	.210 ± .005
-337	3	3-3/8	3/16	2.975 ± .024	.210 ± .005
-338	3-1/8	3-1/2	3/16	3.100 ± .024	.210 ± .005
-339	3-1/4	3-5/8	3/16	3.225 ± .024	.210 ± .005
-340	3-3/8	3-3/4	3/16	3.350 ± .024	.210 ± .005
-341	3-1/2	3-7/8	3/16	3.475 ± .024	.210 ± .005
-342	3-5/8	4	3/16	3.600 ± .028	.210 ± .005
-343	3-3/4	4-1/8	3/16	3.725 ± .028	.210 ± .005
-344	3-7/8	4-1/4	3/16	3.850 ± .028	.210 ± .005
-345	4	4-3/8	3/16	3.975 ± .028	.210 ± .005
-346	4-1/8	4-1/2	3/16	4.100 ± .028	.210 ± .005
-347	4-1/4	4-5/8	3/16	4.225 ± .030	.210 ± .005
-348	4-3/8	4-3/4	3/16	4.350 ± .030	.210 ± .005
-349	4-1/2	4-7/8	3/16	4.475 ± .030	.210 ± .005
-350	4-5/8	5	3/16	4.600 ± .030	.210 ± .005
-351	4-3/4	5-1/8	3/16	4.725 ± .030	.210 ± .005
-352	4-7/8	5-1/4	3/16	4.850 ± .030	.210 ± .005
-353	5	5-3/8	3/16	4.975 ± .037	.210 ± .005
-354	5-1/8	5-1/2	3/16	5.100 ± .037	.210 ± .005
-355	5-1/4	5-5/8	3/16	5.225 ± .037	.210 ± .005
-356	5-3/8	5-3/4	3/16	5.350 ± .037	.210 ± .005
-357	5-1/2	5-7/8	3/16	5.475 ± .037	.210 ± .005
-358	5-5/8	6	3/16	5.600 ± .037	.210 ± .005
-359	5-3/4	6-1/8	3/16	5.725 ± .037	.210 ± .005
-360	5-7/8	6-1/4	3/16	5.850 ± .037	.210 ± .005
-361	6	6-3/8	3/16	5.975 ± .037	.210 ± .005
-362	6-1/4	6-5/8	3/16	6.225 ± .040	.210 ± .005
-363	6-1/2	6-7/8	3/16	6.475 ± .040	.210 ± .005
-364	6-3/4	7-1/8	3/16	6.725 ± .040	.210 ± .005
-365	7	7-3/8	3/16	6.975 ± .040	.210 ± .005
-366	7-1/4	7-5/8	3/16	7.225 ± .045	.210 ± .005
-367	7-1/2	7-7/8	3/16	7.475 ± .045	.210 ± .005
-368	7-3/4	8-1/8	3/16	7.725 ± .045	.210 ± .005
-369	8	8-3/8	3/16	7.975 ± .045	.210 ± .005
-370	8-1/4	8-5/8	3/16	8.225 ± .050	.210 ± .005

Surface Finish: ISO 4287 & Chamfer Information on pages 7-9.
For ISO tolerance charts, refer to pages 12-13.

Compound information available on pages 20-37.

X-Ring

A product of MFP Seals.

MFPSEALS®
www.mfpseals.com

DASH NUMBER	NOMINAL SIZE ID	NOMINAL SIZE OD	NOMINAL SIZE C/S	ACTUAL SIZE ID	ACTUAL SIZE C/S
3/16 - CROSS SECTION					
-371	8-1/2	8-7/8	3/16	8.475 ± .050	.210 ± .005
-372	8-3/4	9-1/8	3/16	8.725 ± .050	.210 ± .005
-373	9	9-3/8	3/16	8.975 ± .050	.210 ± .005
-374	9-1/4	9-5/8	3/16	9.225 ± .055	.210 ± .005
-375	9-1/2	9-7/8	3/16	9.475 ± .055	.210 ± .005
-376	9-3/4	10-1/8	3/16	9.725 ± .055	.210 ± .005
-377	10	10-3/8	3/16	9.975 ± .055	.210 ± .005
-378	10-1/2	10-7/8	3/16	10.475 ± .060	.210 ± .005
-379	11	11-3/8	3/16	10.975 ± .060	.210 ± .005
-380	11-1/2	11-7/8	3/16	11.475 ± .065	.210 ± .005
-381	12	12-3/8	3/16	11.975 ± .065	.210 ± .005
-382	13	13-3/8	3/16	12.975 ± .065	.210 ± .005
-383	14	14-3/8	3/16	13.975 ± .070	.210 ± .005
-384	15	15-3/8	3/16	14.975 ± .070	.210 ± .005
-385	16	16-3/8	3/16	15.955 ± .075	.210 ± .005
-386	17	17-3/8	3/16	16.955 ± .080	.210 ± .005
-387	18	18-3/8	3/16	17.955 ± .085	.210 ± .005
-388	19	19-3/8	3/16	18.955 ± .090	.210 ± .005
-389	20	20-3/8	3/16	19.955 ± .095	.210 ± .005
-390	21	21-3/8	3/16	20.955 ± .095	.210 ± .005
-391	22	22-3/8	3/16	21.955 ± .100	.210 ± .005
-392	23	23-3/8	3/16	22.940 ± .105	.210 ± .005
-393	24	24-3/8	3/16	23.940 ± .110	.210 ± .005
-394	25	25-3/8	3/16	24.940 ± .115	.210 ± .005
-395	26	26-3/8	3/16	25.940 ± .120	.210 ± .005
1/4 - CROSS SECTION					
-400	1-3/8	1-7/8	1/4	1.350 ± .014	.275 ± .006
-401	1-1/2	2	1/4	1.475 ± .014	.275 ± .006
-402	1-5/8	2-1/8	1/4	1.600 ± .015	.275 ± .006
-403	1-3/4	2-1/4	1/4	1.725 ± .016	.275 ± .006
-404	1-7/8	2-3/8	1/4	1.850 ± .016	.275 ± .006
-405	2	2-1/2	1/4	1.975 ± .017	.275 ± .006
-406	2-1/8	2-5/8	1/4	2.100 ± .018	.275 ± .006
-407	2-1/4	2-3/4	1/4	2.225 ± .018	.275 ± .006
-408	2-3/8	2-7/8	1/4	2.350 ± .020	.275 ± .006
-409	2-1/2	3	1/4	2.475 ± .020	.275 ± .006
-410	2-5/8	3-1/8	1/4	2.600 ± .020	.275 ± .006
-411	2-3/4	3-1/4	1/4	2.725 ± .022	.275 ± .006
-412	2-7/8	3-3/8	1/4	2.850 ± .022	.275 ± .006
-413	3	3-1/2	1/4	2.975 ± .024	.275 ± .006
-414	3-1/8	3-5/8	1/4	3.100 ± .024	.275 ± .006
-415	3-1/4	3-3/4	1/4	3.225 ± .024	.275 ± .006
-416	3-3/8	3-7/8	1/4	3.350 ± .026	.275 ± .006
-417	3-1/2	4	1/4	3.475 ± .026	.275 ± .006
-418	3-5/8	4-1/8	1/4	3.600 ± .026	.275 ± .006
-419	3-3/4	4-1/4	1/4	3.725 ± .028	.275 ± .006
-420	3-7/8	3-3/8	1/4	3.850 ± .028	.275 ± .006
-421	4	4-1/2	1/4	3.975 ± .028	.275 ± .006
-422	4-1/8	4-5/8	1/4	4.100 ± .030	.275 ± .006
-423	4-1/4	4-3/4	1/4	4.225 ± .030	.275 ± .006
-424	4-3/8	4-7/8	1/4	4.350 ± .030	.275 ± .006
-425	4-1/2	5	1/4	4.475 ± .033	.275 ± .006

DASH NUMBER	NOMINAL SIZE ID	NOMINAL SIZE OD	NOMINAL SIZE C/S	ACTUAL SIZE ID	ACTUAL SIZE C/S
1/4 - CROSS SECTION					
-426	4-5/8	5-1/8	1/4	4.600 ± .033	.275 ± .006
-427	4-3/4	5-1/4	1/4	4.725 ± .033	.275 ± .006
-428	4-7/8	5-3/8	1/4	4.850 ± .033	.275 ± .006
-429	5	5-1/2	1/4	4.975 ± .037	.275 ± .006
-430	5-1/8	5-5/8	1/4	5.100 ± .037	.275 ± .006
-431	5-1/4	5-3/4	1/4	5.225 ± .037	.275 ± .006
-432	5-3/8	5-7/8	1/4	5.350 ± .037	.275 ± .006
-433	5-1/2	6	1/4	5.475 ± .037	.275 ± .006
-434	5-5/8	6-1/8	1/4	5.600 ± .037	.275 ± .006
-435	5-3/4	6-1/4	1/4	5.725 ± .037	.275 ± .006
-436	5-7/8	6-3/8	1/4	5.850 ± .037	.275 ± .006
-437	6	6-1/2	1/4	5.975 ± .037	.275 ± .006
-438	6-1/4	6-3/4	1/4	6.225 ± .040	.275 ± .006
-439	6-1/2	7	1/4	6.475 ± .040	.275 ± .006
-440	6-3/4	7-1/4	1/4	6.725 ± .040	.275 ± .006
-441	7	7-1/2	1/4	6.975 ± .040	.275 ± .006
-442	7-1/4	7-3/4	1/4	7.225 ± .045	.275 ± .006
-443	7-1/2	8	1/4	7.475 ± .045	.275 ± .006
-444	7-3/4	8-1/4	1/4	7.725 ± .045	.275 ± .006
-445	8	8-1/2	1/4	7.975 ± .045	.275 ± .006
-446	8-1/2	9	1/4	8.475 ± .055	.275 ± .006
-447	9	9-1/2	1/4	8.975 ± .055	.275 ± .006
-448	9-1/2	10	1/4	9.475 ± .055	.275 ± .006
-449	10	10-1/2	1/4	9.975 ± .055	.275 ± .006
-450	10-1/2	11	1/4	10.475 ± .060	.275 ± .006
-451	11	11-1/2	1/4	10.975 ± .060	.275 ± .006
-452	11-1/2	12	1/4	11.475 ± .060	.275 ± .006
-453	12	12-1/2	1/4	11.975 ± .060	.275 ± .006
-454	12-1/2	13	1/4	12.475 ± .060	.275 ± .006
-455	13	13-1/2	1/4	12.975 ± .060	.275 ± .006
-456	13-1/2	14	1/4	13.475 ± .070	.275 ± .006
-457	14	14-1/2	1/4	13.975 ± .070	.275 ± .006
-458	14-1/2	15	1/4	14.475 ± .070	.275 ± .006
-459	15	15-1/2	1/4	14.975 ± .070	.275 ± .006
-460	15-1/2	16	1/4	15.475 ± .070	.275 ± .006
-461	16	16-1/2	1/4	15.955 ± .075	.275 ± .006
-462	16-1/2	17	1/4	16.455 ± .075	.275 ± .006
-463	17	17-1/2	1/4	16.955 ± .080	.275 ± .006
-464	17-1/2	18	1/4	17.455 ± .085	.275 ± .006
-465	18	18-1/2	1/4	17.955 ± .085	.275 ± .006
-466	18-1/2	19	1/4	18.455 ± .085	.275 ± .006
-467	19	19-1/2	1/4	18.955 ± .090	.275 ± .006
-468	19-1/2	20	1/4	19.455 ± .090	.275 ± .006
-469	20	20-1/2	1/4	19.955 ± .095	.275 ± .006
-470	21	21-1/2	1/4	20.955 ± .095	.275 ± .006
-471	22	22-1/2	1/4	21.955 ± .100	.275 ± .006
-472	23	23-1/2	1/4	22.940 ± .105	.275 ± .006
-473	24	24-1/2	1/4	23.940 ± .110	.275 ± .006
-474	25	25-1/2	1/4	24.940 ± .115	.275 ± .006
-475	26	26-1/2	1/4	25.940 ± .120	.275 ± .006

Compound information available on pages 20-37.

Surface Finish: ISO 4287 & Chamfer Information on pages 7-9.
For ISO tolerance charts, refer to pages 12-13.

MFPSEALS®
www.mfpseals.com

GS - Gland Seal

A product of MFP Seals.

GS - GLAND SEAL

MFP Seals' GS Seal is a modern day, heavy-duty gland seal, used for enhanced performance, in place of an O-Ring or O-Ring and Back-Up Ring combination, used to seal threaded glands in Mobile Hydraulic cylinders. The GS provides a high dynamic, pressure energized sealing effect, with 4 sealing contact points that increase in radial force as pressures increase. The GS is primarily designed for heavy-duty, static sealing applications. Its unique design resists the extrusion and pressure damage that normally occurs with O-Ring gland seals. Typically made from our U2150 Ultraflex® Urethane, it is easy to install the GS seal over threaded glands without damage to the seal and provides excellent rebound resilience, hydrolysis and abrasion resistance.

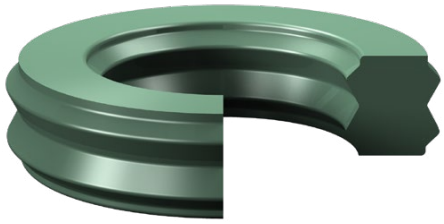

The standard compound for this seal is U2150. It is also available in U2151 and U4150.

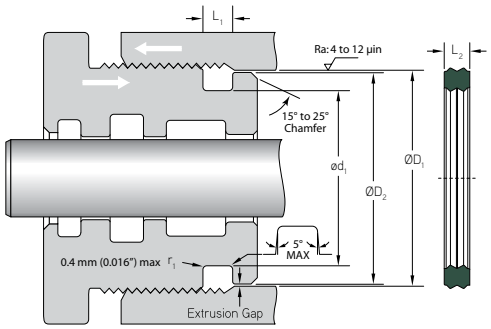

Max Pressure: 690 bar (10,000 psi)

MFP PART NUMBER

GS-131-1U2150

SEAL TYPE — DASH # — # BU-RINGS — COMPOUND

	GS - GLAND SEAL - FITS STANDARD AS568 O-RING GROOVE			
MFP PART NUMBER	ØD1	ØD2	ød1	L1
TOLERANCE	H9	=.000 / -.001	h9	+.005 / -.000
GS-224	2.000	1.997	1.778	0.180
GS-226	2.250	2.247	2.028	0.180
GS-228	2.500	2.497	2.278	0.180

	GS - GLAND SEAL - FITS O-RING GROOVE DESIGNED FOR ONE BACK-UP RING			
MFP PART NUMBER	ØD1	ØD2	ød1	L1
TOLERANCE	H9	=.000 / -.001	h9	+.005 / -.000
GS-033-1	2.125	2.122	2.027	0.145
GS-131-1	1.875	1.872	1.713	0.182
GS-133-1	2.000	1.997	1.838	0.182
GS-140-1	2.437	2.434	2.275	0.182
GS-144-1	2.687	2.684	2.525	0.182
GS-152-1	3.437	3.434	3.275	0.182
GS-154-1	3.937	3.934	3.775	0.182
GS-216-1	1.375	1.372	1.153	0.217
GS-224-1	2.000	1.997	1.778	0.217
GS-226-1	2.250	2.247	2.028	0.217
GS-228-1	2.500	2.497	2.278	0.217
GS-230-1	2.750	2.747	2.528	0.217
GS-232-1	3.000	2.997	2.778	0.217
GS-234-1	3.250	3.247	3.028	0.217
GS-235-1	3.375	3.372	3.153	0.217
GS-236-1	3.500	3.497	3.278	0.217
GS-236-2	3.500	3.497	3.278	0.296
GS-237-1	3.625	3.622	3.403	0.217
GS-238-1	3.750	3.747	3.528	0.217

Surface Finish: ISO 4287 & Chamfer Information on pages 7-9.
For ISO tolerance charts, refer to pages 12-13.

Compound information available on pages 20-37.

GS - Gland Seal

A product of MFP Seals.

MFPSEALS®
www.mfpseals.com

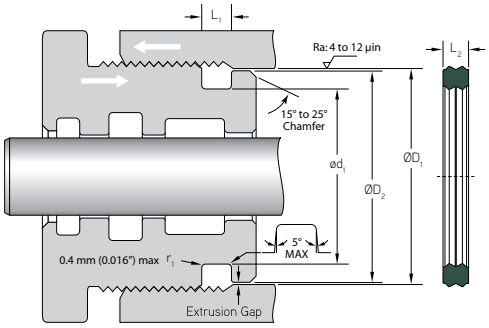

MFP PART NUMBER	GS - GLAND SEAL - FITS O-RING GROOVE DESIGNED FOR ONE BACK-UP RING			
	ØD1	ØD2	ød1	L1
TOLERANCE	H9	=.000 / -.001	h9	+.005 / -.000
GS-239-1	3.875	3.872	3.653	0.217
GS-240-1	4.000	3.997	3.778	0.217
GS-242-1	4.250	4.247	4.028	0.217
GS-244-1	4.500	4.497	4.278	0.217
GS-246-1	4.750	4.747	4.528	0.217
GS-248-1	5.000	4.997	4.778	0.217
GS-250-1	5.250	5.247	5.028	0.217
GS-252-1	5.500	5.497	5.278	0.217
GS-256-1	6.000	5.997	5.778	0.217
GS-330-1	2.500	2.497	2.160	0.333
GS-334-1	3.000	2.997	2.660	0.333
GS-338-1	3.500	3.497	3.160	0.333
GS-342-1	4.000	3.997	3.660	0.333
GS-346-1	4.500	4.497	4.160	0.333
GS-350-1	5.000	4.997	4.660	0.333
GS-358-1	6.000	5.997	5.660	0.333

MFP PART NUMBER	GS - GLAND SEAL - FITS O-RING GROOVE DESIGNED FOR TWO BACK-UP RINGS			
	ØD1	ØD2	ød1	L1
TOLERANCE	H9	=.000 / -.001	h9	+.005 / -.000
GS-218-2	1.500	1.497	1.278	0.296
GS-224-2	2.000	1.997	1.778	0.296
GS-228-2	2.500	2.497	2.278	0.296

Compound information available on pages 20-37.

Surface Finish: ISO 4287 & Chamfer Information on pages 7-9.
For ISO tolerance charts, refer to pages 12-13.

MFPSEALS®
www.mfpseals.com

Extruded O-Ring Cord Stock

A product of MFP Seals.

EXTRUDED O-RING CORD STOCK

Extruded O-Ring cord is used whenever a standard size O-Ring will not fit a particular groove, or where a split O-Ring is required for the application. O-Ring cord can be trimmed to any length, providing a custom fit. Sold by the foot or spool.

Also available in metric sizes (See MORC).

The standard compound for this seal is N6001. It is also available in N6003, V7525 and V7550.

MFP PART NUMBER

ORC-070N6001

SEAL TYPE — CROSS SECTION — COMPOUND

MFP PART NUMBER	EXTRUDED O-RING CORD STOCK		
	NOMINAL	ACTUAL	TOL +/-
ORC-070	0.062	0.070	0.005
ORC-093	0.937	0.093	0.005
ORC-103	0.937	0.103	0.005
ORC-125	0.125	0.125	0.005
ORC-139	0.125	0.139	0.005
ORC-156	0.156	0.156	0.007
ORC-187	0.187	0.188	0.007
ORC-210	0.187	0.210	0.007
ORC-250	0.250	0.250	0.007
ORC-275	0.250	0.275	0.007
ORC-313	0.312	0.313	0.010
ORC-375	0.375	0.375	0.010
ORC-437	0.437	0.437	0.010
ORC-500	0.500	0.500	0.010
ORC-625	0.625	0.625	0.015
ORC-750	0.750	0.750	0.015
ORC-1000	1.000	1.000	0.020

Surface Finish: ISO 4287 & Chamfer Information on pages 7-9.
For ISO tolerance charts, refer to pages 12-13.

Compound information available on pages 20-37.

Extruded Square Cut Cord Stock

A product of MFP Seals.

MFPSEALS®
www.mfpseals.com

EXTRUDED SQUARE CUT CORD STOCK

Extruded Square Ring cord is used whenever a standard size Square Ring will not fit a particular groove, or where a split Square Ring is required for the application. Square Ring cord can be trimmed to any length, providing a custom fit. Sold by the foot or spool.

The standard compound for this seal is N6001. It is also available in N6003.

MFP PART NUMBER

SRC-099N6001

SEAL TYPE — CROSS SECTION — COMPOUND

MFP PART NUMBER	EXTRUDED O-RING CORD STOCK NOMINAL	ACTUAL	TOL +/-
SRC-099	0.093	0.099	0.005
SRC-134	0.125	0.134	0.006
SRC-156	0.156	0.156	0.007
SRC-203	0.187	0.203	0.007
SRC-266	0.250	0.266	0.007
SRC-313	0.312	0.313	0.010
SRC-375	0.375	0.375	0.010
SRC-437	0.437	0.437	0.010
SRC-500	0.500	0.500	0.010
SRC-562	0.562	0.562	0.015
SRC-625	0.625	0.625	0.015
SRC-750	0.750	0.750	0.015
SRC-1000	1.000	1.000	0.025

Compound information available on pages 20-37.

Surface Finish: ISO 4287 & Chamfer Information on pages 7-9.
For ISO tolerance charts, refer to pages 12-13.

MFPSEALS®
www.mfpseals.com

Extruded X-Ring Cord Stock

A product of MFP Seals.

EXTRUDED X-RING CORD STOCK

Extruded X-Ring cord is used whenever a standard size X-Ring will not fit a particular groove, or where a split X-Ring is required for the application. X-Ring cord can be trimmed to any length, providing a custom fit. Sold by the foot or spool.

The standard compound for this seal is N6001. It is also available in N6003.

MFP PART NUMBER

XRC-210N6001

SEAL TYPE — CROSS SECTION — COMPOUND

	EXTRUDED O-RING CORD STOCK		
MFP PART NUMBER	NOMINAL	ACTUAL	TOL +/-
XRC-103	0.093	0.103	0.008
XRC-139	0.125	0.139	0.008
XRC-210	0.187	0.210	0.011
XRC-275	0.250	0.275	0.016
XRC-406	0.375	0.406	0.020

Surface Finish: ISO 4287 & Chamfer Information on pages 7-9.
For ISO tolerance charts, refer to pages 12-13.

Compound information available on pages 20-37.

Contoured Back-Up Ring

A product of MFP Seals.

MFPSEALS®
www.mfpseals.com

CONTOURED BACK-UP RING

Contoured Back-Up Rings are designed to help prevent extrusion and extend the life of an O-Ring, in either static or dynamic sealing applications.

The Contoured Back-Up Ring has a concave surface providing consistent contact with the O-Ring. The part number corresponds to AS568D Dash # for a proper fit.

The standard compound for this seal is N6003. It is also available in V7165.

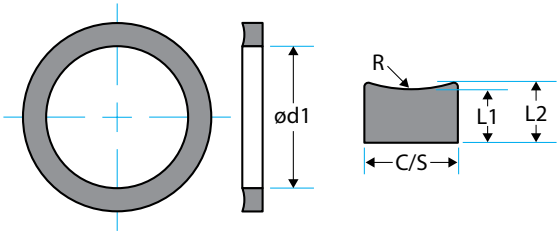

MFP PART NUMBER

BU-004N6003

SEAL TYPE | AS568D DASH # | COMPOUND

MFP PART NUMBER	CONTOURED BACK-UP RING ød1	+/-	R	L2	L1	C/S
.053" C/S WIDTH			+/- .010	+/- .003	+/- .003	+/- .003
BU-004	0.096	0.005	0.087	0.047	0.045	0.053
BU-005	0.127	0.005	0.087	0.047	0.045	0.053
BU-006	0.140	0.005	0.087	0.047	0.045	0.053
BU-007	0.171	0.005	0.087	0.047	0.045	0.053
BU-008	0.202	0.005	0.087	0.047	0.045	0.053
BU-009	0.234	0.005	0.087	0.047	0.045	0.053
BU-010	0.265	0.005	0.087	0.047	0.045	0.053
BU-011	0.327	0.005	0.087	0.047	0.045	0.053
BU-012	0.390	0.005	0.087	0.047	0.045	0.053
BU-013	0.455	0.005	0.087	0.047	0.045	0.053
BU-014	0.518	0.005	0.087	0.047	0.045	0.053
BU-015	0.580	0.007	0.087	0.047	0.045	0.053
BU-016	0.643	0.009	0.087	0.047	0.045	0.053
BU-017	0.705	0.009	0.087	0.047	0.045	0.053
BU-018	0.768	0.009	0.087	0.047	0.045	0.053
BU-019	0.830	0.009	0.087	0.047	0.045	0.053
BU-020	0.893	0.009	0.087	0.047	0.045	0.053
BU-021	0.955	0.009	0.087	0.047	0.045	0.053
BU-022	1.018	0.010	0.087	0.047	0.045	0.053
BU-023	1.080	0.010	0.087	0.047	0.045	0.053
BU-024	1.143	0.010	0.087	0.047	0.045	0.053
BU-025	1.205	0.011	0.087	0.047	0.045	0.053
BU-026	1.268	0.011	0.087	0.047	0.045	0.053
BU-027	1.330	0.011	0.087	0.047	0.045	0.053
BU-028	1.393	0.013	0.087	0.047	0.045	0.053
BU-029	1.518	0.013	0.087	0.047	0.045	0.053
BU-030	1.643	0.013	0.087	0.047	0.045	0.053

Compound information available on pages 20-37.

Surface Finish: ISO 4287 & Chamfer Information on pages 7-9.
For ISO tolerance charts, refer to pages 12-13.

MFPSEALS®
www.mfpseals.com

Contoured Back-Up Ring

A product of MFP Seals.

MFP PART NUMBER	CONTOURED BACK-UP RING ød1	+/-	R	L2	L1	C/S
.053" C/S WIDTH			+/- .010	+/- .003	+/- .003	+/- .003
BU-031	1.768	0.015	0.087	0.047	0.045	0.053
BU-032	1.893	0.015	0.087	0.047	0.045	0.053
BU-033	2.018	0.018	0.087	0.047	0.045	0.053
BU-034	2.143	0.018	0.087	0.047	0.045	0.053
BU-035	2.268	0.018	0.087	0.047	0.045	0.053
BU-036	2.393	0.018	0.087	0.047	0.045	0.053
BU-037	2.518	0.018	0.087	0.047	0.045	0.053
BU-038	2.643	0.020	0.087	0.047	0.045	0.053
BU-039	2.768	0.020	0.087	0.047	0.045	0.053
BU-040	2.893	0.020	0.087	0.047	0.045	0.053
BU-041	3.018	0.024	0.087	0.047	0.045	0.053
BU-042	3.268	0.024	0.087	0.047	0.045	0.053
BU-043	3.518	0.024	0.087	0.047	0.045	0.053
BU-044	3.768	0.027	0.087	0.047	0.045	0.053
BU-045	4.018	0.027	0.087	0.047	0.045	0.053
BU-046	4.268	0.030	0.087	0.047	0.045	0.053
BU-047	4.518	0.030	0.087	0.047	0.045	0.053
BU-048	4.768	0.030	0.087	0.047	0.045	0.053
BU-049	5.018	0.037	0.087	0.047	0.045	0.053
BU-050	5.268	0.037	0.087	0.047	0.045	0.053
.086" C/S WIDTH			+/- .010	+/- .003	+/- .003	+/- .003
BU-102	0.077	0.005	0.129	0.050	0.045	0.086
BU-103	0.109	0.005	0.129	0.050	0.045	0.086
BU-104	0.140	0.005	0.129	0.050	0.045	0.086
BU-105	0.171	0.005	0.129	0.050	0.045	0.086
BU-106	0.202	0.005	0.129	0.050	0.045	0.086
BU-107	0.234	0.005	0.129	0.050	0.045	0.086
BU-108	0.265	0.005	0.129	0.050	0.045	0.086
BU-109	0.327	0.005	0.129	0.050	0.045	0.086
BU-110	0.390	0.005	0.129	0.050	0.045	0.086
BU-111	0.452	0.005	0.129	0.050	0.045	0.086
BU-112	0.515	0.005	0.129	0.050	0.045	0.086
BU-113	0.577	0.007	0.129	0.050	0.045	0.086
BU-114	0.640	0.009	0.129	0.050	0.045	0.086
BU-115	0.702	0.009	0.129	0.050	0.045	0.086
BU-116	0.765	0.009	0.129	0.050	0.045	0.086
BU-117	0.831	0.010	0.129	0.050	0.045	0.086
BU-118	0.893	0.010	0.129	0.050	0.045	0.086
BU-119	0.956	0.010	0.129	0.050	0.045	0.086
BU-120	1.018	0.010	0.129	0.050	0.045	0.086
BU-121	1.081	0.010	0.129	0.050	0.045	0.086
BU-122	1.143	0.010	0.129	0.050	0.045	0.086
BU-123	1.206	0.012	0.129	0.050	0.045	0.086
BU-124	1.268	0.012	0.129	0.050	0.045	0.086
BU-125	1.331	0.012	0.129	0.050	0.045	0.086
BU-126	1.393	0.012	0.129	0.050	0.045	0.086
BU-127	1.456	0.012	0.129	0.050	0.045	0.086

Surface Finish: ISO 4287 & Chamfer Information on pages 7-9.
For ISO tolerance charts, refer to pages 12-13.

Compound information available on pages 20-37.

Contoured Back-Up Ring

A product of MFP Seals.

MFPSEALS®
www.mfpseals.com

	CONTOURED BACK-UP RING					
MFP PART NUMBER	ød1	+/-	R	L2	L1	C/S
.086" C/S WIDTH			+/- .010	+/- .003	+/- .003	+/- .003
BU-128	1.518	0.012	0.129	0.050	0.045	0.086
BU-129	1.581	0.015	0.129	0.050	0.045	0.086
BU-130	1.643	0.015	0.129	0.050	0.045	0.086
BU-131	1.706	0.015	0.129	0.050	0.045	0.086
BU-132	1.768	0.015	0.129	0.050	0.045	0.086
BU-133	1.831	0.015	0.129	0.050	0.045	0.086
BU-134	1.893	0.015	0.129	0.050	0.045	0.086
BU-135	1.956	0.017	0.129	0.050	0.045	0.086
BU-136	2.018	0.017	0.129	0.050	0.045	0.086
BU-137	2.081	0.017	0.129	0.050	0.045	0.086
BU-138	2.143	0.017	0.129	0.050	0.045	0.086
BU-139	2.206	0.017	0.129	0.050	0.045	0.086
BU-140	2.268	0.017	0.129	0.050	0.045	0.086
BU-141	2.331	0.020	0.129	0.050	0.045	0.086
BU-142	2.393	0.020	0.129	0.050	0.045	0.086
BU-143	2.456	0.020	0.129	0.050	0.045	0.086
BU-144	2.518	0.020	0.129	0.050	0.045	0.086
BU-145	2.581	0.020	0.129	0.050	0.045	0.086
BU-146	2.643	0.020	0.129	0.050	0.045	0.086
BU-147	2.706	0.022	0.129	0.050	0.045	0.086
BU-148	2.768	0.022	0.129	0.050	0.045	0.086
BU-149	2.831	0.022	0.129	0.050	0.045	0.086
BU-150	2.893	0.022	0.129	0.050	0.045	0.086
BU-151	3.018	0.024	0.129	0.050	0.045	0.086
BU-152	3.268	0.024	0.129	0.050	0.045	0.086
BU-153	3.518	0.024	0.129	0.050	0.045	0.086
BU-154	3.768	0.028	0.129	0.050	0.045	0.086
BU-155	4.018	0.028	0.129	0.050	0.045	0.086
BU-156	4.268	0.030	0.129	0.050	0.045	0.086
BU-157	4.518	0.030	0.129	0.050	0.045	0.086
BU-158	4.768	0.030	0.129	0.050	0.045	0.086
BU-159	5.018	0.035	0.129	0.050	0.045	0.086
BU-160	5.268	0.035	0.129	0.050	0.045	0.086
BU-161	5.518	0.035	0.129	0.050	0.045	0.086
BU-162	5.768	0.035	0.129	0.050	0.045	0.086
BU-163	6.018	0.035	0.129	0.050	0.045	0.086
BU-164	6.268	0.040	0.129	0.050	0.045	0.086
BU-165	6.518	0.040	0.129	0.050	0.045	0.086
BU-166	6.768	0.040	0.129	0.050	0.045	0.086
BU-167	7.018	0.040	0.129	0.050	0.045	0.086
BU-168	7.268	0.045	0.129	0.050	0.045	0.086
BU-169	7.518	0.045	0.129	0.050	0.045	0.086
BU-170	7.768	0.045	0.129	0.050	0.045	0.086
BU-171	8.018	0.045	0.129	0.050	0.045	0.086
BU-172	8.268	0.050	0.129	0.050	0.045	0.086
BU-173	8.518	0.050	0.129	0.050	0.045	0.086
BU-174	8.768	0.050	0.129	0.050	0.045	0.086

Compound information available on pages 20-37.

Surface Finish: ISO 4287 & Chamfer Information on pages 7-9.
For ISO tolerance charts, refer to pages 12-13.

MFPSEALS®
www.mfpseals.com

Contoured Back-Up Ring

A product of MFP Seals.

MFP PART NUMBER	CONTOURED BACK-UP RING ød1	+/-	R	L2	L1	C/S
.086" C/S WIDTH			+/- .010	+/- .003	+/- .003	+/- .003
BU-175	9.018	0.050	0.129	0.050	0.045	0.086
BU-176	9.268	0.055	0.129	0.050	0.045	0.086
BU-177	9.518	0.055	0.129	0.050	0.045	0.086
BU-178	9.768	0.055	0.129	0.050	0.045	0.086
.118" C/S WIDTH			+/- .010	+/- .003	+/- .003	+/- .004
BU-201	0.202	0.005	0.174	0.048	0.040	0.118
BU-202	0.265	0.005	0.174	0.048	0.040	0.118
BU-203	0.327	0.005	0.174	0.048	0.040	0.118
BU-204	0.390	0.005	0.174	0.048	0.040	0.118
BU-205	0.455	0.005	0.174	0.048	0.040	0.118
BU-206	0.518	0.005	0.174	0.048	0.040	0.118
BU-207	0.580	0.007	0.174	0.048	0.040	0.118
BU-208	0.643	0.009	0.174	0.048	0.040	0.118
BU-209	0.705	0.009	0.174	0.048	0.040	0.118
BU-210	0.766	0.010	0.174	0.048	0.040	0.118
BU-211	0.828	0.010	0.174	0.048	0.040	0.118
BU-212	0.891	0.010	0.174	0.048	0.040	0.118
BU-213	0.953	0.010	0.174	0.048	0.040	0.118
BU-214	1.016	0.010	0.174	0.048	0.040	0.118
BU-215	1.078	0.010	0.174	0.048	0.040	0.118
BU-216	1.141	0.012	0.174	0.048	0.040	0.118
BU-217	1.203	0.012	0.174	0.048	0.040	0.118
BU-218	1.266	0.012	0.174	0.048	0.040	0.118
BU-219	1.334	0.012	0.174	0.048	0.040	0.118
BU-220	1.397	0.012	0.174	0.048	0.040	0.118
BU-221	1.459	0.012	0.174	0.048	0.040	0.118
BU-222	1.522	0.015	0.174	0.048	0.040	0.118
BU-223	1.647	0.015	0.174	0.048	0.040	0.118
BU-224	1.772	0.015	0.174	0.048	0.040	0.118
BU-225	1.897	0.018	0.174	0.048	0.040	0.118
BU-226	2.022	0.018	0.174	0.048	0.040	0.118
BU-227	2.147	0.018	0.174	0.048	0.040	0.118
BU-228	2.272	0.020	0.174	0.048	0.040	0.118
BU-229	2.397	0.020	0.174	0.048	0.040	0.118
BU-230	2.522	0.020	0.174	0.048	0.040	0.118
BU-231	2.631	0.020	0.174	0.048	0.040	0.118
BU-232	2.756	0.024	0.174	0.048	0.040	0.118
BU-233	2.881	0.024	0.174	0.048	0.040	0.118
BU-234	3.006	0.024	0.174	0.048	0.040	0.118
BU-235	3.131	0.024	0.174	0.048	0.040	0.118
BU-236	3.256	0.024	0.174	0.048	0.040	0.118
BU-237	3.381	0.024	0.174	0.048	0.040	0.118
BU-238	3.506	0.024	0.174	0.048	0.040	0.118
BU-239	3.631	0.028	0.174	0.048	0.040	0.118
BU-240	3.756	0.028	0.174	0.048	0.040	0.118
BU-241	3.881	0.028	0.174	0.048	0.040	0.118
BU-242	4.006	0.028	0.174	0.048	0.040	0.118

Surface Finish: ISO 4287 & Chamfer Information on pages 7-9.
For ISO tolerance charts, refer to pages 12-13.

Compound information available on pages 20-37.

Contoured Back-Up Ring

A product of MFP Seals.

MFPSEALS®
www.mfpseals.com

	CONTOURED BACK-UP RING					
MFP PART NUMBER	ød1	+/-	R	L2	L1	C/S
.118" C/S WIDTH			+/- .010	+/- .003	+/- .003	+/- .004
BU-243	4.131	0.028	0.174	0.048	0.040	0.118
BU-244	4.256	0.030	0.174	0.048	0.040	0.118
BU-245	4.381	0.030	0.174	0.048	0.040	0.118
BU-246	4.506	0.030	0.174	0.048	0.040	0.118
BU-247	4.631	0.030	0.174	0.048	0.040	0.118
BU-248	4.768	0.030	0.174	0.048	0.040	0.118
BU-249	4.893	0.035	0.174	0.048	0.040	0.118
BU-250	5.018	0.035	0.174	0.048	0.040	0.118
BU-251	5.143	0.035	0.174	0.048	0.040	0.118
BU-252	5.268	0.035	0.174	0.048	0.040	0.118
BU-253	5.393	0.035	0.174	0.048	0.040	0.118
BU-254	5.518	0.035	0.174	0.048	0.040	0.118
BU-255	5.643	0.035	0.174	0.048	0.040	0.118
BU-256	5.768	0.035	0.174	0.048	0.040	0.118
BU-257	5.893	0.035	0.174	0.048	0.040	0.118
BU-258	6.018	0.035	0.174	0.048	0.040	0.118
BU-259	6.268	0.040	0.174	0.048	0.040	0.118
BU-260	6.518	0.040	0.174	0.048	0.040	0.118
BU-261	6.768	0.040	0.174	0.048	0.040	0.118
BU-262	7.018	0.040	0.174	0.048	0.040	0.118
BU-263	7.268	0.045	0.174	0.048	0.040	0.118
BU-264	7.518	0.045	0.174	0.048	0.040	0.118
BU-265	7.768	0.045	0.174	0.048	0.040	0.118
BU-266	8.018	0.045	0.174	0.048	0.040	0.118
BU-267	8.268	0.050	0.174	0.048	0.040	0.118
BU-268	8.518	0.050	0.174	0.048	0.040	0.118
BU-269	8.768	0.050	0.174	0.048	0.040	0.118
BU-270	9.018	0.050	0.174	0.048	0.040	0.118
BU-271	9.268	0.055	0.174	0.048	0.040	0.118
BU-272	9.518	0.055	0.174	0.048	0.040	0.118
BU-273	9.768	0.055	0.174	0.048	0.040	0.118
BU-274	10.018	0.055	0.174	0.048	0.040	0.118
BU-275	10.518	0.055	0.174	0.048	0.040	0.118
BU-276	11.018	0.065	0.174	0.048	0.040	0.118
BU-277	11.518	0.065	0.174	0.048	0.040	0.118
BU-278	12.018	0.065	0.174	0.048	0.040	0.118
BU-279	13.018	0.065	0.174	0.048	0.040	0.118
BU-280	14.018	0.065	0.174	0.048	0.040	0.118
BU-281	15.018	0.065	0.174	0.048	0.040	0.118
BU-282	15.989	0.075	0.174	0.048	0.040	0.118
BU-283	16.989	0.080	0.174	0.048	0.040	0.118
BU-284	17.989	0.085	0.174	0.048	0.040	0.118
.183" C/S WIDTH			+/- .010	+/- .004	+/- .004	+/- .005
BU-309	0.450	0.005	0.262	0.074	0.060	0.183
BU-310	0.513	0.005	0.262	0.074	0.060	0.183
BU-311	0.575	0.007	0.262	0.074	0.060	0.183
BU-312	0.638	0.009	0.262	0.074	0.060	0.183

Compound information available on pages 20-37.

Surface Finish: ISO 4287 & Chamfer Information on pages 7-9.
For ISO tolerance charts, refer to pages 12-13.

MFPSEALS®
www.mfpseals.com

Contoured Back-Up Ring

A product of MFP Seals.

	CONTOURED BACK-UP RING					
MFP PART NUMBER	ød1	+/-	R	L2	L1	C/S
.183" C/S WIDTH			+/- .010	+/- .004	+/- .004	+/- .005
BU-313	0.700	0.009	0.262	0.074	0.060	0.183
BU-314	0.763	0.010	0.262	0.074	0.060	0.183
BU-315	0.825	0.010	0.262	0.074	0.060	0.183
BU-316	0.888	0.010	0.262	0.074	0.060	0.183
BU-317	0.950	0.010	0.262	0.074	0.060	0.183
BU-318	1.013	0.010	0.262	0.074	0.060	0.183
BU-319	1.075	0.010	0.262	0.074	0.060	0.183
BU-320	1.138	0.012	0.262	0.074	0.060	0.183
BU-321	1.200	0.012	0.262	0.074	0.060	0.183
BU-322	1.263	0.012	0.262	0.074	0.060	0.183
BU-323	1.316	0.012	0.262	0.074	0.060	0.183
BU-324	1.388	0.012	0.262	0.074	0.060	0.183
BU-325	1.513	0.015	0.262	0.074	0.060	0.183
BU-326	1.638	0.015	0.262	0.074	0.060	0.183
BU-327	1.763	0.015	0.262	0.074	0.060	0.183
BU-328	1.888	0.015	0.262	0.074	0.060	0.183
BU-329	2.013	0.018	0.262	0.074	0.060	0.183
BU-330	2.138	0.018	0.262	0.074	0.060	0.183
BU-331	2.268	0.018	0.262	0.074	0.060	0.183
BU-332	2.393	0.018	0.262	0.074	0.060	0.183
BU-333	2.518	0.020	0.262	0.074	0.060	0.183
BU-334	2.643	0.020	0.262	0.074	0.060	0.183
BU-335	2.768	0.020	0.262	0.074	0.060	0.183
BU-336	2.893	0.020	0.262	0.074	0.060	0.183
BU-337	3.018	0.024	0.262	0.074	0.060	0.183
BU-338	3.143	0.024	0.262	0.074	0.060	0.183
BU-339	3.273	0.024	0.262	0.074	0.060	0.183
BU-340	3.398	0.024	0.262	0.074	0.060	0.183
BU-341	3.523	0.024	0.262	0.074	0.060	0.183
BU-342	3.648	0.028	0.262	0.074	0.060	0.183
BU-343	3.773	0.028	0.262	0.074	0.060	0.183
BU-344	3.898	0.028	0.262	0.074	0.060	0.183
BU-345	4.028	0.028	0.262	0.074	0.060	0.183
BU-346	4.153	0.028	0.262	0.074	0.060	0.183
BU-347	4.278	0.030	0.262	0.074	0.060	0.183
BU-348	4.403	0.030	0.262	0.074	0.060	0.183
BU-349	4.528	0.030	0.262	0.074	0.060	0.183
BU-350	4.653	0.030	0.262	0.074	0.060	0.183
BU-351	4.778	0.030	0.262	0.074	0.060	0.183
BU-352	4.903	0.030	0.262	0.074	0.060	0.183
BU-353	5.028	0.037	0.262	0.074	0.060	0.183
BU-354	5.153	0.037	0.262	0.074	0.060	0.183
BU-355	5.278	0.037	0.262	0.074	0.060	0.183
BU-356	5.403	0.037	0.262	0.074	0.060	0.183
BU-357	5.528	0.037	0.262	0.074	0.060	0.183
BU-358	5.653	0.037	0.262	0.074	0.060	0.183
BU-359	5.778	0.037	0.262	0.074	0.060	0.183

Surface Finish: ISO 4287 & Chamfer Information on pages 7-9.
For ISO tolerance charts, refer to pages 12-13.

Compound information available on pages 20-37.

Contoured Back-Up Ring

A product of MFP Seals.

MFPSEALS®
www.mfpseals.com

	CONTOURED BACK-UP RING					
MFP PART NUMBER	ød1	+/-	R	L2	L1	C/S
.183" C/S WIDTH			+/- .010	+/- .004	+/- .004	+/- .005
BU-360	5.903	0.037	0.262	0.074	0.060	0.183
BU-361	6.028	0.037	0.262	0.074	0.060	0.183
BU-362	6.278	0.040	0.262	0.074	0.060	0.183
BU-363	6.528	0.040	0.262	0.074	0.060	0.183
BU-364	6.778	0.040	0.262	0.074	0.060	0.183
BU-365	7.028	0.040	0.262	0.074	0.060	0.183
BU-366	7.278	0.045	0.262	0.074	0.060	0.183
BU-367	7.528	0.045	0.262	0.074	0.060	0.183
BU-368	7.778	0.045	0.262	0.074	0.060	0.183
BU-369	8.028	0.045	0.262	0.074	0.060	0.183
BU-370	8.278	0.050	0.262	0.074	0.060	0.183
BU-371	8.528	0.050	0.262	0.074	0.060	0.183
BU-372	8.778	0.050	0.262	0.074	0.060	0.183
BU-373	9.028	0.050	0.262	0.074	0.060	0.183
BU-374	9.278	0.055	0.262	0.074	0.060	0.183
BU-375	9.528	0.055	0.262	0.074	0.060	0.183
BU-376	9.778	0.055	0.262	0.074	0.060	0.183
BU-377	10.028	0.055	0.262	0.074	0.060	0.183
BU-378	10.528	0.060	0.262	0.074	0.060	0.183
BU-379	11.028	0.060	0.262	0.074	0.060	0.183
BU-380	11.528	0.065	0.262	0.074	0.060	0.183
BU-381	12.028	0.065	0.262	0.074	0.060	0.183
BU-382	13.028	0.065	0.262	0.074	0.060	0.183
BU-383	14.028	0.070	0.262	0.074	0.060	0.183
BU-384	15.028	0.070	0.262	0.074	0.060	0.183
BU-385	16.008	0.075	0.262	0.074	0.060	0.183
BU-386	17.008	0.080	0.262	0.074	0.060	0.183
BU-387	18.008	0.085	0.262	0.074	0.060	0.183
BU-388	19.006	0.090	0.262	0.074	0.060	0.183
BU-389	20.006	0.095	0.262	0.074	0.060	0.183
BU-390	21.006	0.095	0.262	0.074	0.060	0.183
BU-391	22.006	0.100	0.262	0.074	0.060	0.183
BU-392	22.993	0.105	0.262	0.074	0.060	0.183
BU-393	23.993	0.110	0.262	0.074	0.060	0.183
BU-394	24.993	0.115	0.262	0.074	0.060	0.183
BU-395	25.993	0.120	0.262	0.074	0.060	0.183
.236" C/S WIDTH			+/- .010	+/- .005	+/- .005	+/- .006
BU-425	4.551	0.033	0.344	0.115	0.096	0.236
BU-426	4.676	0.033	0.344	0.115	0.096	0.236
BU-427	4.801	0.033	0.344	0.115	0.096	0.236
BU-428	4.926	0.033	0.344	0.115	0.096	0.236
BU-429	5.051	0.037	0.344	0.115	0.096	0.236
BU-430	5.176	0.037	0.344	0.115	0.096	0.236
BU-431	5.301	0.037	0.344	0.115	0.096	0.236
BU-432	5.426	0.037	0.344	0.115	0.096	0.236
BU-433	5.551	0.037	0.344	0.115	0.096	0.236
BU-434	5.676	0.037	0.344	0.115	0.096	0.236

Compound information available on pages 20-37.

Surface Finish: ISO 4287 & Chamfer Information on pages 7-9.
For ISO tolerance charts, refer to pages 12-13.

MFPSEALS®
www.mfpseals.com

Contoured Back-Up Ring

A product of MFP Seals.

MFP PART NUMBER	CONTOURED BACK-UP RING ød1	+/-	R	L2	L1	C/S
.236" C/S WIDTH			+/- .010	+/- .005	+/- .005	+/- .006
BU-435	5.801	0.037	0.344	0.115	0.096	0.236
BU-436	5.926	0.037	0.344	0.115	0.096	0.236
BU-437	6.051	0.037	0.344	0.115	0.096	0.236
BU-438	6.274	0.040	0.344	0.115	0.096	0.236
BU-439	6.524	0.040	0.344	0.115	0.096	0.236
BU-440	6.774	0.040	0.344	0.115	0.096	0.236
BU-441	7.024	0.040	0.344	0.115	0.096	0.236
BU-442	7.274	0.045	0.344	0.115	0.096	0.236
BU-443	7.524	0.045	0.344	0.115	0.096	0.236
BU-444	7.774	0.045	0.344	0.115	0.096	0.236
BU-445	8.024	0.045	0.344	0.115	0.096	0.236
BU-446	8.524	0.055	0.344	0.115	0.096	0.236
BU-447	9.024	0.055	0.344	0.115	0.096	0.236
BU-448	9.524	0.055	0.344	0.115	0.096	0.236
BU-449	10.024	0.055	0.344	0.115	0.096	0.236
BU-450	10.524	0.060	0.344	0.115	0.096	0.236
BU-451	11.024	0.060	0.344	0.115	0.096	0.236
BU-452	11.524	0.060	0.344	0.115	0.096	0.236
BU-453	12.024	0.060	0.344	0.115	0.096	0.236
BU-454	12.524	0.060	0.344	0.115	0.096	0.236
BU-455	13.024	0.060	0.344	0.115	0.096	0.236
BU-456	13.524	0.070	0.344	0.115	0.096	0.236
BU-457	14.024	0.070	0.344	0.115	0.096	0.236
BU-458	14.524	0.070	0.344	0.115	0.096	0.236
BU-459	15.024	0.070	0.344	0.115	0.096	0.236
BU-460	15.524	0.070	0.344	0.115	0.096	0.236
BU-461	16.004	0.075	0.344	0.115	0.096	0.236
BU-462	16.504	0.075	0.344	0.115	0.096	0.236
BU-463	17.004	0.080	0.344	0.115	0.096	0.236
BU-464	17.504	0.085	0.344	0.115	0.096	0.236
BU-465	18.004	0.085	0.344	0.115	0.096	0.236
BU-466	18.504	0.085	0.344	0.115	0.096	0.236
BU-467	19.004	0.090	0.344	0.115	0.096	0.236
BU-468	19.504	0.090	0.344	0.115	0.096	0.236
BU-469	20.004	0.095	0.344	0.115	0.096	0.236
BU-470	21.004	0.095	0.344	0.115	0.096	0.236
BU-471	22.004	0.100	0.344	0.115	0.096	0.236
BU-472	23.004	0.105	0.344	0.115	0.096	0.236
BU-473	24.004	0.110	0.344	0.115	0.096	0.236
BU-474	25.004	0.115	0.344	0.115	0.096	0.236
BU-475	26.004	0.120	0.344	0.115	0.096	0.236

Surface Finish: ISO 4287 & Chamfer Information on pages 7-9.
For ISO tolerance charts, refer to pages 12-13.

Compound information available on pages 20-37.

Split Back-Up Ring

A product of MFP Seals.

MFPSEALS
www.mfpseals.com

SPLIT BACK-UP RING

Split Back-Up Rings are commonly used to prevent extrusion of O-Rings.

For MIL SPEC manufactured split back-up rings, order using MS28774, followed by the AS568D Dash # and the T1000 compound number.

The standard compound for this seal is T1000.

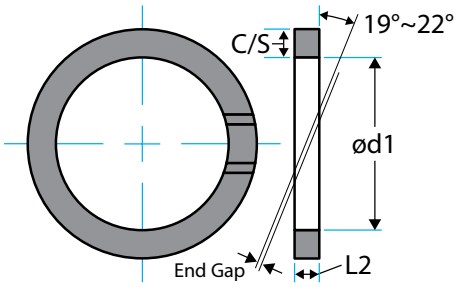

MFP PART NUMBER

BU-005ST1000

SEAL TYPE | AS568D DASH # | SPLIT | COMPOUND

MFP PART NUMBER - MIL SPEC

MS28774-005T1000

SEAL TYPE | AS568D DASH # | COMPOUND

	O-RING BACK-UP						
		C/S		L2		End Gap	
MFP PART NUMBER	ød1 ±0.001	Min.	Max.	Min.	Max.	Min.	Max.
-004	0.109	0.052	0.054	0.045	0.052	0.000	0.005
-005	0.124	0.052	0.054	0.045	0.052	0.000	0.005
-006	0.140	0.052	0.054	0.045	0.052	0.000	0.005
-007	0.171	0.052	0.054	0.045	0.052	0.000	0.005
-008	0.202	0.052	0.054	0.045	0.052	0.000	0.005
-009	0.234	0.052	0.054	0.045	0.052	0.000	0.005
-010	0.265	0.052	0.054	0.045	0.052	0.000	0.005
-011	0.327	0.052	0.054	0.045	0.052	0.000	0.005
-012	0.390	0.052	0.054	0.045	0.052	0.000	0.005
-013	0.455	0.052	0.054	0.045	0.052	0.000	0.005
-014	0.518	0.052	0.054	0.045	0.052	0.000	0.005
-015	0.580	0.052	0.054	0.045	0.052	0.000	0.005
-016	0.643	0.052	0.054	0.045	0.052	0.000	0.005
-017	0.705	0.052	0.054	0.045	0.052	0.000	0.005
-018	0.768	0.052	0.054	0.045	0.052	0.000	0.005
-019	0.830	0.052	0.054	0.045	0.052	0.000	0.005
-020	0.898	0.052	0.054	0.045	0.052	0.000	0.005
-021	0.960	0.052	0.054	0.045	0.052	0.000	0.005
-022	1.023	0.052	0.054	0.045	0.052	0.000	0.005
-023	1.085	0.052	0.054	0.045	0.052	0.000	0.005
-024	1.148	0.052	0.054	0.045	0.052	0.000	0.005
-025	1.210	0.052	0.054	0.045	0.052	0.000	0.005
-026	1.273	0.052	0.054	0.045	0.052	0.000	0.005
-027	1.335	0.052	0.054	0.045	0.052	0.000	0.005
-028	1.398	0.052	0.054	0.045	0.052	0.000	0.005
-110	0.390	0.085	0.087	0.045	0.052	0.000	0.006
-111	0.452	0.085	0.087	0.045	0.052	0.000	0.006
-112	0.515	0.085	0.087	0.045	0.052	0.000	0.006

Compound information available on pages 20-37.

Surface Finish: ISO 4287 & Chamfer Information on pages 7-9.
For ISO tolerance charts, refer to pages 12-13.

MFPSEALS®
www.mfpseals.com

Split Back-Up Ring

A product of MFP Seals.

	O-RING BACK-UP						
		C/S		L2		End Gap	
MFP PART NUMBER	ød1 ±0.001	Min.	Max.	Min.	Max.	Min.	Max.
-113	0.577	0.085	0.087	0.045	0.052	0.000	0.006
-114	0.640	0.085	0.087	0.045	0.052	0.000	0.006
-115	0.702	0.085	0.087	0.045	0.052	0.000	0.006
-116	0.765	0.085	0.087	0.045	0.052	0.000	0.006
-117	0.832	0.085	0.087	0.045	0.052	0.000	0.006
-118	0.895	0.085	0.087	0.045	0.052	0.000	0.006
-119	0.957	0.085	0.087	0.045	0.052	0.000	0.006
-120	1.020	0.085	0.087	0.045	0.052	0.000	0.006
-121	1.082	0.085	0.087	0.045	0.052	0.000	0.006
-122	1.145	0.085	0.087	0.045	0.052	0.000	0.006
-123	1.207	0.085	0.087	0.045	0.052	0.000	0.006
-124	1.270	0.085	0.087	0.045	0.052	0.000	0.006
-125	1.332	0.085	0.087	0.045	0.052	0.000	0.006
-126	1.397	0.085	0.087	0.045	0.052	0.000	0.006
-127	1.459	0.085	0.087	0.045	0.052	0.000	0.006
-128	1.522	0.085	0.087	0.045	0.052	0.000	0.006
-129	1.584	0.085	0.087	0.045	0.052	0.000	0.006
-130	1.647	0.085	0.087	0.045	0.052	0.000	0.006
-131	1.709	0.085	0.087	0.045	0.052	0.000	0.006
-132	1.772	0.085	0.087	0.045	0.052	0.000	0.006
-133	1.834	0.085	0.087	0.045	0.052	0.000	0.006
-134	1.897	0.085	0.087	0.045	0.052	0.000	0.006
-135	1.959	0.085	0.087	0.045	0.052	0.000	0.006
-136	2.022	0.085	0.087	0.045	0.052	0.000	0.006
-137	2.084	0.085	0.087	0.045	0.052	0.000	0.006
-138	2.147	0.085	0.087	0.045	0.052	0.000	0.006
-139	2.209	0.085	0.087	0.045	0.052	0.000	0.006
-140	2.258	0.085	0.087	0.045	0.052	0.000	0.006
-141	2.320	0.085	0.087	0.045	0.052	0.000	0.006
-142	2.383	0.085	0.087	0.045	0.052	0.000	0.006
-143	2.445	0.085	0.087	0.045	0.052	0.000	0.006
-144	2.508	0.085	0.087	0.045	0.052	0.000	0.006
-145	2.570	0.085	0.087	0.045	0.052	0.000	0.006
-146	2.633	0.085	0.087	0.045	0.052	0.000	0.006
-147	2.685	0.085	0.087	0.045	0.052	0.000	0.006
-148	2.758	0.085	0.087	0.045	0.052	0.000	0.006
-149	2.820	0.085	0.087	0.045	0.052	0.000	0.006
-210	0.766	0.118	0.120	0.045	0.052	0.000	0.006
-211	0.828	0.118	0.120	0.045	0.052	0.000	0.006
-212	0.891	0.118	0.120	0.045	0.052	0.000	0.006
-213	0.953	0.118	0.120	0.045	0.052	0.000	0.006
-214	1.016	0.118	0.120	0.045	0.052	0.000	0.006
-215	1.078	0.118	0.120	0.045	0.052	0.000	0.006
-216	1.141	0.118	0.120	0.045	0.052	0.000	0.006
-217	1.203	0.118	0.120	0.045	0.052	0.000	0.006
-218	1.266	0.118	0.120	0.045	0.052	0.000	0.006
-219	1.334	0.118	0.120	0.045	0.052	0.000	0.006
-220	1.397	0.118	0.120	0.045	0.052	0.000	0.006

Surface Finish: ISO 4287 & Chamfer Information on pages 7-9.
For ISO tolerance charts, refer to pages 12-13.

Compound information available on pages 20-37.

Split Back-Up Ring

A product of MFP Seals.

MFPSEALS®
www.mfpseals.com

	O-RING BACK-UP						
		C/S		L2		End Gap	
MFP PART NUMBER	ød1 ±0.001	Min.	Max.	Min.	Max.	Min.	Max.
-221	1.459	0.118	0.120	0.045	0.052	0.000	0.006
-222	1.522	0.118	0.120	0.045	0.052	0.000	0.006
-223	1.647	0.118	0.120	0.045	0.052	0.000	0.007
-224	1.772	0.118	0.120	0.045	0.052	0.000	0.007
-225	1.897	0.118	0.120	0.045	0.052	0.000	0.007
-226	2.022	0.118	0.120	0.045	0.052	0.000	0.007
-227	2.147	0.118	0.120	0.045	0.052	0.000	0.007
-228	2.272	0.118	0.120	0.045	0.052	0.000	0.007
-229	2.397	0.118	0.120	0.045	0.052	0.000	0.007
-230	2.522	0.118	0.120	0.045	0.052	0.000	0.007
-231	2.631	0.118	0.120	0.045	0.052	0.000	0.007
-232	2.756	0.118	0.120	0.045	0.052	0.000	0.007
-233	2.881	0.118	0.120	0.045	0.052	0.000	0.007
-234	3.006	0.118	0.120	0.045	0.052	0.000	0.007
-235	3.131	0.118	0.120	0.045	0.052	0.000	0.007
-236	3.256	0.118	0.120	0.045	0.052	0.000	0.007
-237	3.381	0.118	0.120	0.045	0.052	0.000	0.007
-238	3.506	0.118	0.120	0.045	0.052	0.000	0.007
-239	3.631	0.118	0.120	0.045	0.052	0.000	0.007
-240	3.756	0.118	0.120	0.045	0.052	0.000	0.007
-241	3.881	0.118	0.120	0.045	0.052	0.000	0.007
-242	4.006	0.118	0.120	0.045	0.052	0.000	0.007
-243	4.131	0.118	0.120	0.045	0.052	0.000	0.007
-244	4.256	0.118	0.120	0.045	0.052	0.000	0.007
-245	4.381	0.118	0.120	0.045	0.052	0.000	0.007
-246	4.506	0.118	0.120	0.045	0.052	0.000	0.007
-247	4.631	0.118	0.120	0.045	0.052	0.000	0.007
-325	1.513	0.182	0.184	0.065	0.075	0.000	0.007
-326	1.638	0.182	0.184	0.065	0.075	0.000	0.007
-327	1.763	0.182	0.184	0.065	0.075	0.000	0.007
-328	1.888	0.182	0.184	0.065	0.075	0.000	0.007
-329	2.013	0.182	0.184	0.065	0.075	0.000	0.007
-330	2.138	0.182	0.184	0.065	0.075	0.000	0.007
-331	2.268	0.182	0.184	0.065	0.075	0.000	0.007
-332	2.393	0.182	0.184	0.065	0.075	0.000	0.007
-333	2.518	0.182	0.184	0.065	0.075	0.000	0.007
-334	2.643	0.182	0.184	0.065	0.075	0.000	0.007
-335	2.768	0.182	0.184	0.065	0.075	0.000	0.007
-336	2.893	0.182	0.184	0.065	0.075	0.000	0.007
-337	3.018	0.182	0.184	0.065	0.075	0.000	0.007
-338	3.143	0.182	0.184	0.065	0.075	0.000	0.007
-339	3.273	0.182	0.184	0.065	0.075	0.000	0.007
-340	3.398	0.182	0.184	0.065	0.075	0.000	0.007
-341	3.523	0.182	0.184	0.065	0.075	0.000	0.007
-342	3.648	0.182	0.184	0.065	0.075	0.000	0.007
-343	3.773	0.182	0.184	0.065	0.075	0.000	0.007
-344	3.898	0.182	0.184	0.065	0.075	0.000	0.007
-345	4.028	0.182	0.184	0.065	0.075	0.000	0.007

Compound information available on pages 20-37.

Surface Finish: ISO 4287 & Chamfer Information on pages 7-9.
For ISO tolerance charts, refer to pages 12-13.

MFPSEALS®
www.mfpseals.com

Split Back-Up Ring

A product of MFP Seals.

	O-RING BACK-UP						
	ød1	C/S		L2		End Gap	
MFP PART NUMBER	±0.001	Min.	Max.	Min.	Max.	Min.	Max.
-346	4.153	0.182	0.184	0.065	0.075	0.000	0.007
-347	4.278	0.182	0.184	0.065	0.075	0.000	0.007
-348	4.403	0.182	0.184	0.065	0.075	0.000	0.007
-349	4.528	0.182	0.184	0.065	0.075	0.000	0.007
-425	4.551	0.235	0.237	0.100	0.110	0.000	0.008
-426	4.676	0.235	0.237	0.100	0.110	0.000	0.008
-427	4.801	0.235	0.237	0.100	0.110	0.000	0.008
-428	4.926	0.235	0.237	0.100	0.110	0.000	0.008
-429	5.051	0.235	0.237	0.100	0.110	0.000	0.008
-430	5.176	0.235	0.237	0.100	0.110	0.000	0.008
-431	5.301	0.235	0.237	0.100	0.110	0.000	0.008
-432	5.426	0.235	0.237	0.100	0.110	0.000	0.008
-433	5.551	0.235	0.237	0.100	0.110	0.000	0.008
-434	5.676	0.235	0.237	0.100	0.110	0.000	0.008
-435	5.801	0.235	0.237	0.100	0.110	0.000	0.008
-436	5.926	0.235	0.237	0.100	0.110	0.000	0.008
-437	6.051	0.235	0.237	0.100	0.110	0.000	0.008
-438	6.274	0.235	0.237	0.100	0.110	0.000	0.008
-439	6.524	0.235	0.237	0.100	0.110	0.000	0.008
-440	6.774	0.235	0.237	0.100	0.110	0.000	0.008
-441	7.024	0.235	0.237	0.100	0.110	0.000	0.008
-442	7.274	0.235	0.237	0.100	0.110	0.000	0.008
-443	7.524	0.235	0.237	0.100	0.110	0.000	0.008
-444	7.774	0.235	0.237	0.100	0.110	0.000	0.008
-445	8.024	0.235	0.237	0.100	0.110	0.000	0.008
-446	8.524	0.235	0.237	0.100	0.110	0.000	0.008
-447	9.024	0.235	0.237	0.100	0.110	0.000	0.008
-448	9.524	0.235	0.237	0.100	0.110	0.000	0.008
-449	10.024	0.235	0.237	0.100	0.110	0.000	0.008
-450	10.524	0.235	0.237	0.100	0.110	0.000	0.010
-451	11.024	0.235	0.237	0.100	0.110	0.000	0.010
-452	11.524	0.235	0.237	0.100	0.110	0.000	0.010
-453	12.024	0.235	0.237	0.100	0.110	0.000	0.010
-454	12.524	0.235	0.237	0.100	0.110	0.000	0.010
-455	13.024	0.235	0.237	0.100	0.110	0.000	0.010
-456	13.524	0.235	0.237	0.100	0.110	0.000	0.010
-457	14.024	0.235	0.237	0.100	0.110	0.000	0.010
-458	14.524	0.235	0.237	0.100	0.110	0.000	0.010
-459	15.024	0.235	0.237	0.100	0.110	0.000	0.010
-460	15.524	0.235	0.237	0.100	0.110	0.000	0.010

Surface Finish: ISO 4287 & Chamfer Information on pages 7-9.
For ISO tolerance charts, refer to pages 12-13.

Compound information available on pages 20-37.

Solid Back-Up Ring

A product of MFP Seals.

MFPSEALS
www.mfpseals.com

SOLID BACK-UP RING

Solid Back-Up Rings are commonly used to prevent extrusion of O-Rings.

For MIL SPEC manufactured solid back-up rings order using MS27595, followed by the AS568D Dash # and the compound number.

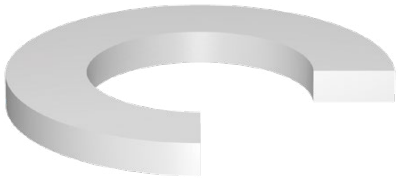

The standard compound for this seal is T1000.

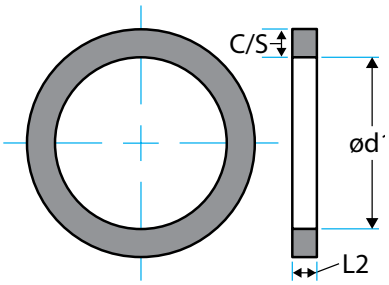

MFP PART NUMBER

BU-005T1000

SEAL TYPE — AS568D DASH # — COMPOUND

MFP PART NUMBER - MIL SPEC

MS27595-005T1000

SEAL TYPE — AS568D DASH # — COMPOUND

		PISTON APPLICATION			
		C/S		L2	
MFP PART NUMBER	ød1	Min.	Max.	Min.	Max.
TOLERANCE	±0.001				
-004	0.080	0.054	0.056	0.048	0.052
-005	0.111	0.054	0.056	0.048	0.052
-006	0.125	0.054	0.056	0.048	0.052
-007	0.156	0.054	0.056	0.048	0.052
-008	0.187	0.054	0.056	0.048	0.052
-009	0.219	0.054	0.056	0.048	0.052
-010	0.250	0.054	0.056	0.048	0.052
-011	0.312	0.054	0.056	0.048	0.052
-012	0.375	0.054	0.056	0.048	0.052
-013	0.440	0.054	0.056	0.048	0.052
-014	0.503	0.054	0.056	0.048	0.052
-015	0.565	0.054	0.056	0.048	0.052
-016	0.628	0.054	0.056	0.048	0.052
-017	0.690	0.054	0.056	0.048	0.052
-018	0.753	0.054	0.056	0.048	0.052
-019	0.815	0.054	0.056	0.048	0.052
-020	0.881	0.054	0.056	0.048	0.052
TOLERANCE	±0.002				
-021	0.943	0.054	0.056	0.048	0.052
-022	1.006	0.054	0.056	0.048	0.052
-023	1.068	0.054	0.056	0.048	0.052
-024	1.131	0.054	0.056	0.048	0.052
-025	1.193	0.054	0.056	0.048	0.052
-026	1.256	0.054	0.056	0.048	0.052
-027	1.318	0.054	0.056	0.048	0.052
-028	1.381	0.054	0.056	0.048	0.052

Compound information available on pages 20-37.

Surface Finish: ISO 4287 & Chamfer Information on pages 7-9.
For ISO tolerance charts, refer to pages 12-13.

MFPSEALS®
www.mfpseals.com

Solid Back-Up Ring

A product of MFP Seals.

MFP PART NUMBER	ød1	PISTON APPLICATION C/S Min.	C/S Max.	L2 Min.	L2 Max.
TOLERANCE	±0.001				
-110	0.374	0.087	0.089	0.048	0.052
-111	0.437	0.087	0.089	0.048	0.052
-112	0.499	0.087	0.089	0.048	0.052
-113	0.562	0.087	0.089	0.048	0.052
-114	0.624	0.087	0.089	0.048	0.052
-115	0.687	0.087	0.089	0.048	0.052
-116	0.749	0.087	0.089	0.048	0.052
-117	0.815	0.087	0.089	0.048	0.052
-118	0.877	0.087	0.089	0.048	0.052
-119	0.940	0.087	0.089	0.048	0.052
-120	1.002	0.087	0.089	0.048	0.052
TOLERANCE	±0.002				
-121	1.065	0.087	0.089	0.048	0.052
-122	1.127	0.087	0.089	0.048	0.052
-123	1.190	0.087	0.089	0.048	0.052
-124	1.252	0.087	0.089	0.048	0.052
-125	1.315	0.087	0.089	0.048	0.052
-126	1.377	0.087	0.089	0.048	0.052
-127	1.440	0.087	0.089	0.048	0.052
-128	1.502	0.087	0.089	0.048	0.052
-129	1.565	0.087	0.089	0.048	0.052
-130	1.629	0.087	0.089	0.048	0.052
-131	1.691	0.087	0.089	0.048	0.052
-132	1.754	0.087	0.089	0.048	0.052
-133	1.816	0.087	0.089	0.048	0.052
-134	1.879	0.087	0.089	0.048	0.052
-135	1.942	0.087	0.089	0.048	0.052
-136	2.004	0.087	0.089	0.048	0.052
-137	2.067	0.087	0.089	0.048	0.052
-138	2.129	0.087	0.089	0.048	0.052
-139	2.192	0.087	0.089	0.048	0.052
-140	2.254	0.087	0.089	0.048	0.052
-141	2.317	0.087	0.089	0.048	0.052
-142	2.379	0.087	0.089	0.048	0.052
-143	2.442	0.087	0.089	0.048	0.052
-144	2.504	0.087	0.089	0.048	0.052
-145	2.567	0.087	0.089	0.048	0.052
-146	2.629	0.087	0.089	0.048	0.052
-147	2.692	0.087	0.089	0.048	0.052
-148	2.754	0.087	0.089	0.048	0.052
-149	2.817	0.087	0.089	0.048	0.052
TOLERANCE	±0.001				
-210	0.753	0.118	0.120	0.048	0.052
-211	0.815	0.118	0.120	0.048	0.052
-212	0.878	0.118	0.120	0.048	0.052
-213	0.940	0.118	0.120	0.048	0.052

Surface Finish: ISO 4287 & Chamfer Information on pages 7-9.
For ISO tolerance charts, refer to pages 12-13.

Compound information available on pages 20-37.

Solid Back-Up Ring

A product of MFP Seals.

MFPSEALS
www.mfpseals.com

		PISTON APPLICATION			
		C/S		L2	
MFP PART NUMBER	ød1	Min.	Max.	Min.	Max.
TOLERANCE	±0.002				
-214	1.003	0.118	0.120	0.048	0.052
-215	1.065	0.118	0.120	0.048	0.052
-216	1.128	0.118	0.120	0.048	0.052
-217	1.190	0.118	0.120	0.048	0.052
-218	1.253	0.118	0.120	0.048	0.052
-219	1.315	0.118	0.120	0.048	0.052
-220	1.378	0.118	0.120	0.048	0.052
-221	1.440	0.118	0.120	0.048	0.052
-222	1.503	0.118	0.120	0.048	0.052
-223	1.629	0.118	0.120	0.048	0.052
-224	1.754	0.118	0.120	0.048	0.052
-225	1.880	0.118	0.120	0.048	0.052
-226	2.005	0.118	0.120	0.048	0.052
-227	2.130	0.118	0.120	0.048	0.052
-228	2.255	0.118	0.120	0.048	0.052
-229	2.380	0.118	0.120	0.048	0.052
-230	2.505	0.118	0.120	0.048	0.052
-231	2.630	0.118	0.120	0.048	0.052
-232	2.755	0.118	0.120	0.048	0.052
-233	2.880	0.118	0.120	0.048	0.052
-234	3.005	0.118	0.120	0.048	0.052
-235	3.130	0.118	0.120	0.048	0.052
-236	3.255	0.118	0.120	0.048	0.052
-237	3.380	0.118	0.120	0.048	0.052
-238	3.505	0.118	0.120	0.048	0.052
-239	3.630	0.118	0.120	0.048	0.052
-240	3.755	0.118	0.120	0.048	0.052
-241	3.880	0.118	0.120	0.048	0.052
-242	4.005	0.118	0.120	0.048	0.052
-243	4.130	0.118	0.120	0.048	0.052
-244	4.255	0.118	0.120	0.048	0.052
-245	4.380	0.118	0.120	0.048	0.052
-246	4.505	0.118	0.120	0.048	0.052
-247	4.630	0.118	0.120	0.048	0.052
-325	1.497	0.184	0.186	0.071	0.075
-326	1.622	0.184	0.186	0.071	0.075
-327	1.748	0.184	0.186	0.071	0.075
-328	1.873	0.184	0.186	0.071	0.075
-329	1.998	0.184	0.186	0.071	0.075
-330	2.123	0.184	0.186	0.071	0.075
-331	2.248	0.184	0.186	0.071	0.075
-332	2.373	0.184	0.186	0.071	0.075
-333	2.498	0.184	0.186	0.071	0.075
-334	2.623	0.184	0.186	0.071	0.075
-335	2.748	0.184	0.186	0.071	0.075

Compound information available on pages 20-37.

Surface Finish: ISO 4287 & Chamfer Information on pages 7-9.
For ISO tolerance charts, refer to pages 12-13.

MFPSEALS®
www.mfpseals.com

Solid Back-Up Ring

A product of MFP Seals.

MFP PART NUMBER	ød1	PISTON APPLICATION C/S Min.	C/S Max.	L2 Min.	L2 Max.
TOLERANCE	±0.002				
-336	2.873	0.184	0.186	0.071	0.075
-337	2.998	0.184	0.186	0.071	0.075
-338	3.123	0.184	0.186	0.071	0.075
-339	3.248	0.184	0.186	0.071	0.075
-340	3.373	0.184	0.186	0.071	0.075
-341	3.498	0.184	0.186	0.071	0.075
-342	3.623	0.184	0.186	0.071	0.075
-343	3.748	0.184	0.186	0.071	0.075
-344	3.873	0.184	0.186	0.071	0.075
-345	3.998	0.184	0.186	0.071	0.075
-346	4.123	0.184	0.186	0.071	0.075
-347	4.248	0.184	0.186	0.071	0.075
-348	4.373	0.184	0.186	0.071	0.075
-349	4.498	0.184	0.186	0.071	0.075
-425	4.502	0.235	0.237	0.106	0.110
-426	4.627	0.235	0.237	0.106	0.110
-427	4.752	0.235	0.237	0.106	0.110
-428	4.877	0.235	0.237	0.106	0.110
-429	5.002	0.235	0.237	0.106	0.110
-430	5.127	0.235	0.237	0.106	0.110
-431	5.252	0.235	0.237	0.106	0.110
-432	5.377	0.235	0.237	0.106	0.110
-433	5.502	0.235	0.237	0.106	0.110
-434	5.627	0.235	0.237	0.106	0.110
-435	5.752	0.235	0.237	0.106	0.110
-436	5.877	0.235	0.237	0.106	0.110
-437	6.002	0.235	0.237	0.106	0.110
-438	6.252	0.235	0.237	0.106	0.110
-439	6.502	0.235	0.237	0.106	0.110
-440	6.752	0.235	0.237	0.106	0.110
-441	7.002	0.235	0.237	0.106	0.110
-442	7.252	0.235	0.237	0.106	0.110
-443	7.502	0.235	0.237	0.106	0.110
-444	7.752	0.235	0.237	0.106	0.110
-445	8.002	0.235	0.237	0.106	0.110
TOLERANCE	±0.003				
-446	8.502	0.235	0.237	0.106	0.110
-447	9.002	0.235	0.237	0.106	0.110
-448	9.502	0.235	0.237	0.106	0.110
-449	10.002	0.235	0.237	0.106	0.110
-450	10.502	0.235	0.237	0.106	0.110
TOLERANCE	±0.004				
-451	11.002	0.235	0.237	0.106	0.110
-452	11.502	0.235	0.237	0.106	0.110
-453	12.002	0.235	0.237	0.106	0.110

Surface Finish: ISO 4287 & Chamfer Information on pages 7-9.
For ISO tolerance charts, refer to pages 12-13.

Compound information available on pages 20-37.

RETURN TO INDEX

Solid Back-Up Ring

A product of MFP Seals.

MFPSEALS®
www.mfpseals.com

MFP PART NUMBER	ød1	PISTON APPLICATION C/S Min.	C/S Max.	L2 Min.	L2 Max.
TOLERANCE	±0.004				
-454	12.502	0.235	0.237	0.106	0.110
-455	13.002	0.235	0.237	0.106	0.110
TOLERANCE	±0.005				
-456	13.502	0.235	0.237	0.106	0.110
-457	14.002	0.235	0.237	0.106	0.110
-458	14.502	0.235	0.237	0.106	0.110
-459	15.002	0.235	0.237	0.106	0.110
-460	15.502	0.235	0.237	0.106	0.110

RETURN TO AD INDEX

1415 AS568 O-RINGS

MEGA O-RING KITS

KIT PART NUMBER	COMPOUND	TYPE	HARDNESS	OPERATING TEMPERATURE RANGE
MFP-K-OR-MEGA-N6001	N6001	NBR	70 Shore A	-40°C to +100°C (-40°F to +212°F)
MFP-K-OR-MEGA-N6003	N6003	NBR	90 Shore A	-20°C to +100°C (-4*F to +212°F)
MFP-K-OR-MEGA-V7100	V7100	FKM	75 Shore A	-20°C to +200°C (-4°F to +392*F)

Packaged in a convenient and durable carry case, each MFP SEALS MEGA O-RING KIT includes 1,415 O-Rings, in the most common AS568 sizes. All sub kits; 1/16", 3/32", & 1/8" C/S O-Rings, BOSS and Flange O-Rings, are self contained in easy to manage cases. Made from our N6001, N6003 or V7100 compounds, they are a great addition to your repair kit inventory. Call your local MFP Seals' Sales Associate for pricing, and order your MEGA O-RING KITS today!

EACH MEGA O-RING KIT CONTAINS THE FOLLOWING:

BOSS O-RINGS DASH #	QTY.	FLANGE O-RINGS DASH #	QTY.	1/16" C/S O-RINGS DASH #	QTY.	3/32" C/S O-RINGS DASH #	QTY.	1/8" C/S O-RINGS DASH #	QTY.
903	15	08	10	006 thru 018	25	109 thru 118	25	210 thru 214	20
904	25	12	10	019 thru 021	20	119 thru 120	20	215 thru 222	15
905	15	16	10	022 thru 026	15	121 thru 127	15	223 thru 224	10
906	25	20	5	028 thru 030	15	128 thru 129	10	226	10
908	25	24	5			131	10	228	10
910	25	32	5			133	10	232	10
912	15					135	5	236	10
916	10								

Compound information available on pages 20-37.

Surface Finish: ISO 4287 & Chamfer Information on pages 7-9.
For ISO tolerance charts, refer to pages 12-13.

MFPSEALS®
www.mfpseals.com

576 Back-Up Ring

A product of MFP Seals.

576 BACK-UP RING

Our 576 Back-Up Ring, made from M1001 or M1002 compounds, can be used to prevent the extrusion of O-Rings and U-Cups, in both rod and piston applications.

The standard compound for this seal is M1001. It is also available in M1002.

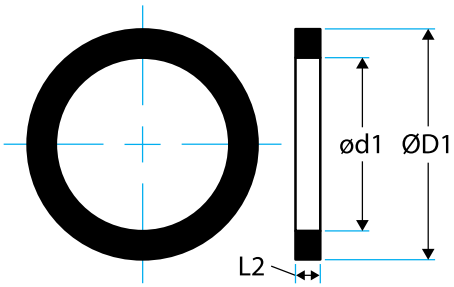

MFP PART NUMBER

576-314M1001

SEAL TYPE — AS568D DASH # — COMPOUND

MFP PART NUMBER	576 BACK-UP RING ød1	ØD1	L2
576-314	0.750	1.125	0.070
576-216	1.125	1.375	0.060
576-320	1.125	1.500	0.070
576-324	1.375	1.750	0.070
576-325	1.500	1.875	0.070
576-326	1.625	2.000	0.070
576-327	1.750	2.125	0.070
576-328	1.875	2.250	0.070
576-329	2.000	2.375	0.070
576-330	2.125	2.500	0.070
576-331	2.250	2.625	0.070
576-407	2.250	2.750	0.070
576-332	2.375	2.750	0.060
576-408	2.375	2.875	0.070
576-333	2.500	2.875	0.070
576-409	2.500	3.000	0.070
576-334	2.625	3.000	0.070
576-411	2.750	3.250	0.070
576-412	2.875	3.375	0.070
576-413	3.000	3.500	0.070
576-338	3.125	3.500	0.070
576-415	3.250	3.750	0.070
576-417	3.500	4.000	0.070
576-419	3.750	4.250	0.070
576-421	4.000	4.500	0.070
576-425	4.500	5.000	0.070
576-427	4.750	5.250	0.070
576-429	5.000	5.500	0.075
576-433	5.500	6.000	0.120

Surface Finish: ISO 4287 & Chamfer Information on pages 7-9.
For ISO tolerance charts, refer to pages 12-13.

Compound information available on pages 20-37.

H2155 Back-Up Ring

A product of MFP Seals.

MFPSEALS
www.mfpseals.com

BACK-UP RINGS - H2155-BLK

MFP Seals produces Backup rings that are designed to keep O-Rings from extruding as well as Backup rings for U-Cup applications. These Back-Up Rings are produced in either a contoured design, Split (MS28774) or Solid (MS27595) configuration and a wide range of materials are used to fit your application.

The standard compound for this seal is H2155-BLK (Black). Also available in H2155 (Orange)

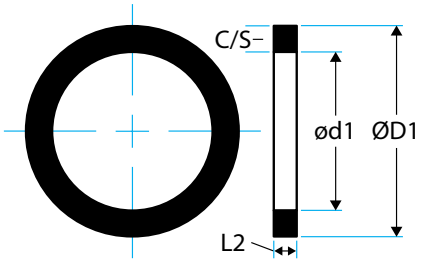

MFP PART NUMBER

BU-004H2155-BLK

SEAL TYPE | AS568D DASH # | COMPOUND

MFP PART NUMBER	NOMINAL DIMENSIONS ID	OD	C/S	ACTUAL SIZE ød1	ØD1	L2
.062" - CROSS SECTION WIDTH						
BU-004H2155-BLK	5/64	13/64	1/16	0.078	0.203	0.050
BU-005H2155-BLK	3/32	7/32	1/16	0.094	0.219	0.050
BU-006H2155-BLK	1/8	1/4	1/16	0.125	0.250	0.050
BU-007H2155-BLK	5/32	9/32	1/16	0.156	0.281	0.050
BU-008H2155-BLK	3/16	5/16	1/16	0.188	0.313	0.050
BU-009H2155-BLK	7/32	11/32	1/16	0.219	0.344	0.050
BU-010H2155-BLK	1/4	3/8	1/16	0.250	0.375	0.050
BU-011H2155-BLK	5/16	7/16	1/16	0.313	0.438	0.050
BU-012H2155-BLK	3/8	1/2	1/16	0.375	0.500	0.050
BU-013H2155-BLK	7/16	9/16	1/16	0.438	0.563	0.050
BU-014H2155-BLK	1/2	5/8	1/16	0.500	0.625	0.050
BU-015H2155-BLK	9/16	11/16	1/16	0.562	0.687	0.050
BU-016H2155-BLK	5/8	3/4	1/16	0.625	0.750	0.050
BU-017H2155-BLK	11/16	13/16	1/16	0.687	0.812	0.050
BU-018H2155-BLK	3/4	7/8	1/16	0.750	0.875	0.050
BU-019H2155-BLK	13/16	15/16	1/16	0.812	0.937	0.050
BU-020H2155-BLK	7/8	1	1/16	0.875	1.000	0.050
BU-022H2155-BLK	1	1-1/8	1/16	1.000	1.125	0.050
BU-023H2155-BLK	1-1/16	1-3/16	1/16	1.063	1.188	0.050
BU-024H2155-BLK	1-1/8	1-1/4	1/16	1.125	1.250	0.050
BU-025H2155-BLK	1-3/16	1-5/16	1/16	1.188	1.313	0.050
BU-026H2155-BLK	1-1/4	1-3/8	1/16	1.250	1.375	0.050
BU-027H2155-BLK	1-5/16	1-7/16	1/16	1.312	1.437	0.050
BU-028H2155-BLK	1-3/8	1-1/2	1/16	1.375	1.500	0.050
BU-029H2155-BLK	1-1/2	1-5/8	1/16	1.500	1.625	0.050
BU-030H2155-BLK	1-5/8	1-3/4	1/16	1.625	1.750	0.050
BU-031H2155-BLK	1-3/4	1-7/8	1/16	1.750	1.875	0.050
BU-032H2155-BLK	1-7/8	2	1/16	1.875	2.000	0.050

Compound information available on pages 20-37.

Surface Finish: ISO 4287 & Chamfer Information on pages 7-9.
For ISO tolerance charts, refer to pages 12-13.

MFPSEALS®
www.mfpseals.com

H2155 Back-Up Ring

A product of MFP Seals.

MFP PART NUMBER	NOMINAL DIMENSIONS ID	OD	C/S	ACTUAL SIZE ød1	ØD1	L2
.062" - CROSS SECTION WIDTH						
BU-033H2155-BLK	2	2-1/8	1/16	2.000	2.125	0.050
BU-034H2155-BLK	2-1/8	2-1/4	1/16	2.125	2.250	0.050
BU-035H2155-BLK	2-1/4	2-3/8	1/16	2.250	2.375	0.050
BU-036H2155-BLK	2-3/8	2-1/2	1/16	2.375	2.500	0.050
BU-037H2155-BLK	2-1/2	2-5/8	1/16	2.500	2.625	0.050
BU-038H2155-BLK	2-5/8	2-3/4	1/16	2.625	2.750	0.050
BU-039H2155-BLK	2-3/4	2-7/8	1/16	2.750	2.875	0.050
BU-040H2155-BLK	2-7/8	3	1/16	2.875	3.000	0.050
BU-041H2155-BLK	3	3-1/8	1/16	3.000	3.125	0.050
BU-042H2155-BLK	3-1/4	3-3/8	1/16	3.250	3.375	0.050
BU-044H2155-BLK	3-3/4	3-7/8	1/16	3.750	3.875	0.050
BU-045H2155-BLK	4	4-1/8	1/16	4.000	4.125	0.050
BU-046H2155-BLK	4-1/4	4-3/8	1/16	4.250	4.375	0.050
BU-047H2155-BLK	4-1/2	4-5/8	1/16	4.500	4.625	0.050
BU-048H2155-BLK	4-3/4	4-7/8	1/16	4.750	4.875	0.050
BU-049H2155-BLK	5	5-1/8	1/16	5.000	5.125	0.050
BU-050H2155-BLK	5-1/4	5-3/8	1/16	5.250	5.375	0.050
.093" - CROSS SECTION WIDTH						
BU-102H2155-BLK	1/16	1/4	3/32	0.063	0.250	0.050
BU-103H2155-BLK	3/32	9/32	3/32	0.094	0.281	0.050
BU-104H2155-BLK	1/8	5/16	3/32	0.125	0.313	0.050
BU-105H2155-BLK	5/32	11/32	3/32	0.156	0.344	0.050
BU-106H2155-BLK	3/16	3/8	3/32	0.188	0.375	0.050
BU-107H2155-BLK	7/32	13/32	3/32	0.219	0.406	0.050
BU-108H2155-BLK	1/4	7/16	3/32	0.250	0.438	0.050
BU-109H2155-BLK	5/16	1/2	3/32	0.313	0.500	0.050
BU-110H2155-BLK	3/8	9/16	3/32	0.375	0.563	0.050
BU-111H2155-BLK	7/16	5/8	3/32	0.438	0.625	0.050
BU-112H2155-BLK	1/2	11/16	3/32	0.500	0.688	0.050
BU-113H2155-BLK	9/16	3/4	3/32	0.563	0.750	0.050
BU-114H2155-BLK	5/8	13/16	3/32	0.625	0.813	0.050
BU-115H2155-BLK	11/16	7/8	3/32	0.688	0.875	0.050
BU-116H2155-BLK	3/4	15/16	3/32	0.750	1.313	0.050
BU-117H2155-BLK	13/16	1	3/32	0.813	1.000	0.050
BU-118H2155-BLK	7/8	1-1/16	3/32	0.875	1.063	0.050
BU-119H2155-BLK	15/16	1-1/8	3/32	0.938	1.125	0.050
BU-120H2155-BLK	1	1-3/16	3/32	1.000	1.188	0.050
BU-121H2155-BLK	1-1/16	1-1/4	3/32	1.063	1.250	0.050
BU-122H2155-BLK	1-1/8	1-5/16	3/32	1.125	1.313	0.050
BU-123H2155-BLK	1-3/16	1-3/8	3/32	1.187	1.312	0.050
BU-124H2155-BLK	1-1/4	1-7/16	3/32	1.250	1.438	0.050
BU-125H2155-BLK	1-5/16	1-1/2	3/32	1.312	1.437	0.050
BU-126H2155-BLK	1-3/8	1-9/16	3/32	1.375	1.500	0.050
BU-127H2155-BLK	1-7/16	1-5/8	3/32	1.438	1.625	0.050
BU-128H2155-BLK	1-1/2	1-11/16	3/32	1.500	1.688	0.050
BU-129H2155-BLK	1-9/16	1-3/4	3/32	1.562	1.687	0.050

Surface Finish: ISO 4287 & Chamfer Information on pages 7-9.
For ISO tolerance charts, refer to pages 12-13.

Compound information available on pages 20-37.

H2155 Back-Up Ring

A product of MFP Seals.

MFPSEALS®
www.mfpseals.com

MFP PART NUMBER	NOMINAL DIMENSIONS ID	OD	C/S	ACTUAL SIZE ød1	ØD1	L2
.093" - CROSS SECTION WIDTH						
BU-130H2155-BLK	1-5/8	1-13/16	3/32	1.625	1.813	0.050
BU-131H2155-BLK	1-11/16	1-7/8	3/32	1.688	1.875	0.050
BU-132H2155-BLK	1-3/4	1-15/16	3/32	1.750	1.938	0.050
BU-133H2155-BLK	1-13/16	2	3/32	1.813	2.000	0.050
BU-134H2155-BLK	1-7/8	2-1/16	3/32	1.875	2.000	0.050
BU-135H2155-BLK	1-15/16	2-1/8	3/32	1.938	2.125	0.050
BU-136H2155-BLK	2	2-3/16	3/32	2.000	2.188	0.050
BU-137H2155-BLK	2-1/16	2-1/4	3/32	2.063	2.250	0.050
BU-138H2155-BLK	2-1/8	2-5/16	3/32	2.125	2.313	0.050
BU-139H2155-BLK	2-3/16	2-3/8	3/32	2.188	2.375	0.050
BU-140H2155-BLK	2-1/4	2-7/16	3/32	2.250	2.438	0.050
BU-141H2155-BLK	2-5/16	2-1/2	3/32	2.313	2.500	0.050
BU-142H2155-BLK	2-3/8	2-9/16	3/32	2.375	2.563	0.050
BU-143H2155-BLK	2-7/16	2-5/8	3/32	2.438	2.625	0.050
BU-144H2155-BLK	2-1/2	2-11/16	3/32	2.500	2.688	0.050
BU-145H2155-BLK	2-9/16	2-3/4	3/32	2.563	2.750	0.050
BU-146H2155-BLK	2-5/8	2-13/16	3/32	2.625	2.813	0.050
BU-147H2155-BLK	2-11/16	2-7/8	3/32	2.688	2.875	0.050
BU-148H2155-BLK	2-3/4	2-15/16	3/32	2.750	2.938	0.050
BU-149H2155-BLK	2-13/16	3	3/32	2.813	3.000	0.050
BU-150H2155-BLK	2-7/8	3-1/16	3/32	2.875	3.063	0.050
BU-151H2155-BLK	3	3-3/16	3/32	3.000	3.188	0.050
BU-152H2155-BLK	3-1/4	3-7/16	3/32	3.250	3.438	0.050
BU-153H2155-BLK	3-1/2	3-11/16	3/32	3.500	3.688	0.050
BU-154H2155-BLK	3-3/4	3-15/16	3/32	3.750	3.938	0.050
BU-155H2155-BLK	4	4-3/16	3/32	4.000	4.188	0.050
BU-156H2155-BLK	4-1/4	4-7/16	3/32	4.250	4.438	0.050
BU-157H2155-BLK	4-1/2	4-11/16	3/32	4.500	4.688	0.050
BU-158H2155-BLK	4-3/4	4-15/16	3/32	4.750	4.938	0.050
BU-159H2155-BLK	5	5-3/16	3/32	5.000	5.188	0.050
BU-160H2155-BLK	5-1/4	5-7/16	3/32	5.250	5.438	0.050
BU-161H2155-BLK	5-1/2	5-11/16	3/32	5.500	5.688	0.050
BU-162H2155-BLK	5-3/4	5-15/16	3/32	5.750	5.938	0.050
BU-163H2155-BLK	6	6-3/16	3/32	6.000	6.188	0.050
BU-164H2155-BLK	6-1/4	6-7/16	3/32	6.250	6.438	0.050
BU-166H2155-BLK	6-3/4	6-15/16	3/32	6.750	6.938	0.050
BU-167H2155-BLK	7	7-3/16	3/32	7.000	7.188	0.050
BU-168H2155-BLK	7-1/4	7-7/16	3/32	7.250	7.438	0.050
BU-169H2155-BLK	7-1/2	7-11/16	3/32	7.500	7.688	0.050
BU-170H2155-BLK	7-3/4	7-15/16	3/32	7.750	7.938	0.050
BU-171H2155-BLK	8	8-3/16	3/32	8.000	8.188	0.050
BU-172H2155-BLK	8-1/4	8-7/16	3/32	8.250	8.438	0.050
BU-173H2155-BLK	8-1/2	8-11/16	3/32	8.500	8.688	0.050
BU-174H2155-BLK	8-3/4	8-15/16	3/32	8.750	8.938	0.050
BU-175H2155-BLK	9	9-3/16	3/32	9.000	9.188	0.050

Compound information available on pages 20-37.

Surface Finish: ISO 4287 & Chamfer Information on pages 7-9.
For ISO tolerance charts, refer to pages 12-13.

MFPSEALS®
www.mfpseals.com

H2155 Back-Up Ring

A product of MFP Seals.

MFP PART NUMBER	NOMINAL DIMENSIONS ID	OD	C/S	ACTUAL SIZE ød1	ØD1	L2
.125" - CROSS SECTION WIDTH						
BU-201H2155-BLK	3/16	7/16	1/8	0.188	0.438	0.050
BU-204H2155-BLK	3/8	5/8	1/8	0.375	0.625	0.050
BU-205H2155-BLK	7/16	11/16	1/8	0.438	0.688	0.050
BU-206H2155-BLK	1/2	3/4	1/8	0.500	0.750	0.050
BU-207H2155-BLK	9/16	13/16	1/8	0.563	0.813	0.050
BU-208H2155-BLK	5/8	7/8	1/8	0.625	0.875	0.050
BU-209H2155-BLK	11/16	15/16	1/8	0.688	0.938	0.050
BU-210H2155-BLK	3/4	1	1/8	0.750	1.000	0.050
BU-211H2155-BLK	13/16	1-1/16	1/8	0.813	1.063	0.050
BU-212H2155-BLK	7/8	1-1/8	1/8	0.875	1.125	0.050
BU-213H2155-BLK	15/16	1-3/16	1/8	0.938	1.188	0.050
BU-214H2155-BLK	1	1-1/4	1/8	1.000	1.250	0.050
BU-215H2155-BLK	1-1/16	1-5/16	1/8	1.063	1.313	0.050
BU-216H2155-BLK	1-1/8	1-3/8	1/8	1.125	1.375	0.050
BU-217H2155-BLK	1-3/16	1-7/16	1/8	1.188	1.438	0.050
BU-218H2155-BLK	1-1/4	1-1/2	1/8	1.250	1.500	0.050
BU-219H2155-BLK	1-5/16	1-9/16	1/8	1.313	1.563	0.050
BU-220H2155-BLK	1-3/8	1-5/8	1/8	1.375	1.625	0.050
BU-221H2155-BLK	1-7/16	1-11/16	1/8	1.438	1.688	0.050
BU-222H2155-BLK	1-1/2	1-3/4	1/8	1.500	1.750	0.050
BU-223H2155-BLK	1-5/8	1-7/8	1/8	1.625	1.875	0.050
BU-224H2155-BLK	1-3/4	2	1/8	1.750	2.000	0.050
BU-225H2155-BLK	1-7/8	2-1/8	1/8	1.875	2.125	0.050
BU-226H2155-BLK	2	2-1/4	1/8	2.000	2.250	0.050
BU-227H2155-BLK	2-1/8	2-3/8	1/8	2.125	2.375	0.050
BU-228H2155-BLK	2-1/4	2-1/2	1/8	2.250	2.500	0.050
BU-229H2155-BLK	2-3/8	2-5/8	1/8	2.375	2.625	0.050
BU-230H2155-BLK	2-1/2	2-3/4	1/8	2.500	2.750	0.050
BU-231H2155-BLK	2-5/8	2-7/8	1/8	2.625	2.875	0.050
BU-232H2155-BLK	2-3/4	3	1/8	2.750	3.000	0.050
BU-233H2155-BLK	2-7/8	3-1/8	1/8	2.875	3.125	0.050
BU-234H2155-BLK	3	3-1/4	1/8	3.000	3.250	0.050
BU-235H2155-BLK	3-1/8	3-3/8	1/8	3.125	3.375	0.050
BU-236H2155-BLK	3-1/4	3-1/2	1/8	3.250	3.500	0.050
BU-237H2155-BLK	3-3/8	3-5/8	1/8	3.375	3.625	0.050
BU-238H2155-BLK	3-1/2	3-3/4	1/8	3.500	3.750	0.050
BU-239H2155-BLK	3-5/8	3-7/8	1/8	3.625	3.875	0.050
BU-240H2155-BLK	3-3/4	4	1/8	3.750	4.000	0.050
BU-241H2155-BLK	3-7/8	4-1/8	1/8	3.875	4.125	0.050
BU-242H2155-BLK	4	4-1/4	1/8	4.000	4.250	0.050
BU-243H2155-BLK	4-1/8	4-3/8	1/8	4.125	4.375	0.050
BU-244H2155-BLK	4-1/4	4-1/2	1/8	4.250	4.500	0.050
BU-245H2155-BLK	4-3/8	4-5/8	1/8	4.375	4.625	0.050
BU-246H2155-BLK	4-1/2	4-3/4	1/8	4.500	4.750	0.050
BU-247H2155-BLK	4-5/8	4-7/8	1/8	4.625	4.875	0.050
BU-248H2155-BLK	4-3/4	5	1/8	4.750	5.000	0.050

Surface Finish: ISO 4287 & Chamfer Information on pages 7-9.
For ISO tolerance charts, refer to pages 12-13.

Compound information available on pages 20-37.

H2155 Back-Up Ring

A product of MFP Seals.

MFPSEALS
www.mfpseals.com

	NOMINAL DIMENSIONS			ACTUAL SIZE		
MFP PART NUMBER	ID	OD	C/S	ød1	ØD1	L2
.125" - CROSS SECTION WIDTH						
BU-249H2155-BLK	4-7/8	5-1/8	1/8	4.875	5.125	0.050
BU-250H2155-BLK	5	5-1/4	1/8	5.000	5.250	0.050
BU-251H2155-BLK	5-1/8	5-3/8	1/8	5.125	5.375	0.050
BU-252H2155-BLK	5-1/4	5-1/2	1/8	5.250	5.500	0.050
BU-253H2155-BLK	5-3/8	5-5/8	1/8	5.375	5.625	0.050
BU-254H2155-BLK	5-1/2	5-3/4	1/8	5.500	5.750	0.050
BU-255H2155-BLK	5-5/8	5-7/8	1/8	5.625	5.875	0.050
BU-256H2155-BLK	5-3/4	6	1/8	5.750	6.000	0.050
BU-257H2155-BLK	5-7/8	6-1/8	1/8	5.875	6.125	0.050
BU-258H2155-BLK	6	6-1/4	1/8	6.000	6.250	0.050
BU-259H2155-BLK	6-1/4	6-1/2	1/8	6.250	6.500	0.050
BU-260H2155-BLK	6-1/2	6-3/4	1/8	6.500	6.750	0.050
BU-261H2155-BLK	6-3/4	7	1/8	6.750	7.000	0.050
BU-262H2155-BLK	7	7-1/4	1/8	7.000	7.250	0.050
BU-263H2155-BLK	7-1/4	7-1/2	1/8	7.250	7.500	0.050
BU-264H2155-BLK	7-1/2	7-3/4	1/8	7.500	7.750	0.050
BU-265H2155-BLK	7-3/4	8	1/8	7.750	8.000	0.050
BU-266H2155-BLK	8	8-1/4	1/8	8.000	8.250	0.050
BU-267H2155-BLK	8-1/4	8-1/2	1/8	8.250	8.500	0.050
BU-268H2155-BLK	8-1/2	8-3/4	1/8	8.500	8.750	0.050
BU-269H2155-BLK	8-3/4	9	1/8	8.750	9.000	0.050
BU-270H2155-BLK	9	9-1/4	1/8	9.000	9.250	0.050
BU-271H2155-BLK	9-1/4	9-1/2	1/8	9.250	9.500	0.050
BU-272H2155-BLK	9-1/2	9-3/4	1/8	9.500	9.750	0.050
BU-273H2155-BLK	9-3/4	10	1/8	9.750	10.000	0.050
BU-274H2155-BLK	10	10-1/4	1/8	10.000	10.250	0.050
BU-275H2155-BLK	10-1/2	10-3/4	1/8	10.500	10.750	0.050
BU-276H2155-BLK	11	11-1/4	1/8	11.000	11.250	0.050
BU-277H2155-BLK	11-1/2	11-3/4	1/8	11.500	11.750	0.050
.187" - CROSS SECTION WIDTH						
BU-309H2155-BLK	7/16	13/16	3/16	0.438	0.813	0.070
BU-311H2155-BLK	9/16	15/16	3/16	0.563	0.937	0.070
BU-312H2155-BLK	5/8	1	3/16	0.625	1.000	0.070
BU-313H2155-BLK	11/16	1-1/16	3/16	0.688	1.063	0.070
BU-314H2155-BLK	3/4	1-1/8	3/16	0.750	1.125	0.070
BU-315H2155-BLK	13/16	1-3/16	3/16	0.813	1.188	0.070
BU-316H2155-BLK	7/8	1-1/4	3/16	0.875	1.250	0.070
BU-317H2155-BLK	15/16	1-5/16	3/16	0.938	1.313	0.070
BU-318H2155-BLK	1	1-3/8	3/16	1.000	1.375	0.070
BU-319H2155-BLK	1-1/16	1-7/16	3/16	1.063	1.438	0.070
BU-320H2155-BLK	1-1/8	1-1/2	3/16	1.125	1.500	0.070
BU-321H2155-BLK	1-3/16	1-9/16	3/16	1.188	1.563	0.070
BU-322H2155-BLK	1-1/4	1-5/8	3/16	1.250	1.625	0.070
BU-323H2155-BLK	1-5/16	1-11/16	3/16	1.313	1.688	0.070
BU-324H2155-BLK	1-3/8	1-3/4	3/16	1.375	1.750	0.070
BU-325H2155-BLK	1-1/2	1-7/8	3/16	1.500	1.875	0.070

Compound information available on pages 20-37.

Surface Finish: ISO 4287 & Chamfer Information on pages 7-9.
For ISO tolerance charts, refer to pages 12-13.

MFPSEALS®
www.mfpseals.com

H2155 Back-Up Ring

A product of MFP Seals.

MFP PART NUMBER	NOMINAL DIMENSIONS ID	OD	C/S	ACTUAL SIZE ød1	ØD1	L2
.187" - CROSS SECTION WIDTH						
BU-326H2155-BLK	1-5/8	2	3/16	1.625	2.000	0.070
BU-327H2155-BLK	1-3/4	2-1/8	3/16	1.750	2.125	0.070
BU-328H2155-BLK	1-7/8	2-1/4	3/16	1.875	2.250	0.070
BU-329H2155-BLK	2	2-3/8	3/16	2.000	2.375	0.070
BU-330H2155-BLK	2-1/8	2-1/2	3/16	2.125	2.500	0.070
BU-331H2155-BLK	2-1/4	2-5/8	3/16	2.250	2.625	0.070
BU-332H2155-BLK	2-3/8	2-3/4	3/16	2.375	2.750	0.070
BU-333H2155-BLK	2-1/2	2-7/8	3/16	2.500	2.875	0.070
BU-334H2155-BLK	2-5/8	3	3/16	2.625	3.000	0.070
BU-335H2155-BLK	2-3/4	3-1/8	3/16	2.750	3.125	0.070
BU-336H2155-BLK	2-7/8	3-1/4	3/16	2.875	3.250	0.070
BU-337H2155-BLK	3	3-3/8	3/16	3.000	3.375	0.070
BU-338H2155-BLK	3-1/8	3-1/2	3/16	3.125	3.500	0.070
BU-339H2155-BLK	3-1/4	3-5/8	3/16	3.250	3.625	0.070
BU-340H2155-BLK	3-3/8	3-3/4	3/16	3.375	3.750	0.070
BU-341H2155-BLK	3-1/2	3-7/8	3/16	3.500	3.875	0.070
BU-342H2155-BLK	3-5/8	4	3/16	3.625	4.000	0.070
BU-343H2155-BLK	3-3/4	4-1/8	3/16	3.750	4.125	0.070
BU-344H2155-BLK	3-7/8	4-1/4	3/16	3.875	4.250	0.070
BU-345H2155-BLK	4	4-3/8	3/16	4.000	4.375	0.070
BU-346H2155-BLK	4-1/8	4-1/2	3/16	4.125	4.500	0.070
BU-347H2155-BLK	4-1/4	4-5/8	3/16	4.250	4.625	0.070
BU-348H2155-BLK	4-3/8	4-3/4	3/16	4.375	4.750	0.070
BU-349H2155-BLK	4-1/2	4-7/8	3/16	4.500	4.875	0.070
BU-350H2155-BLK	4-5/8	5	3/16	4.625	5.000	0.070
BU-351H2155-BLK	4-3/4	5-1/8	3/16	4.750	5.125	0.070
BU-352H2155-BLK	4-7/8	5-1/4	3/16	4.875	5.250	0.070
BU-353H2155-BLK	5	5-3/8	3/16	5.000	5.375	0.070
BU-354H2155-BLK	5-1/8	5-1/2	3/16	5.125	5.500	0.070
BU-355H2155-BLK	5-1/4	5-5/8	3/16	5.250	5.625	0.070
BU-356H2155-BLK	5-3/8	5-3/4	3/16	5.375	5.750	0.070
BU-357H2155-BLK	5-1/2	5-7/8	3/16	5.500	5.875	0.070
BU-358H2155-BLK	5-5/8	6	3/16	5.625	6.000	0.070
BU-359H2155-BLK	5-3/4	6-1/8	3/16	5.750	6.125	0.070
BU-360H2155-BLK	5-7/8	6-1/4	3/16	5.875	6.250	0.070
BU-361H2155-BLK	6	6-3/8	3/16	6.000	6.375	0.070
BU-362H2155-BLK	6-1/4	6-5/8	3/16	6.250	6.625	0.070
BU-363H2155-BLK	6-1/2	6-7/8	3/16	6.500	6.875	0.070
BU-364H2155-BLK	6-3/4	7-1/8	3/16	6.750	7.125	0.070
BU-365H2155-BLK	7	7-3/8	3/16	7.000	7.375	0.070
BU-366H2155-BLK	7-1/4	7-5/8	3/16	7.250	7.625	0.070
BU-367H2155-BLK	7-1/2	7-7/8	3/16	7.500	7.875	0.070
BU-368H2155-BLK	7-3/4	8-1/8	3/16	7.750	8.125	0.070
BU-369H2155-BLK	8	8-3/8	3/16	8.000	8.375	0.070
BU-370H2155-BLK	8-1/4	8-5/8	3/16	8.250	8.625	0.070
BU-371H2155-BLK	8-1/2	8-7/8	3/16	8.500	8.875	0.070

Surface Finish: ISO 4287 & Chamfer Information on pages 7-9.
For ISO tolerance charts, refer to pages 12-13.

Compound information available on pages 20-37.

H2155 Back-Up Ring

A product of MFP Seals.

MFPSEALS®
www.mfpseals.com

MFP PART NUMBER	NOMINAL DIMENSIONS ID	OD	C/S	ACTUAL SIZE ød1	ØD1	L2
.187" - CROSS SECTION WIDTH						
BU-372H2155-BLK	8-3/4	9-1/8	3/16	8.750	9.125	0.070
BU-373H2155-BLK	9	9-3/8	3/16	9.000	9.375	0.070
BU-374H2155-BLK	9-1/4	9-5/8	3/16	9.250	9.625	0.070
BU-375H2155-BLK	9-1/2	9-7/8	3/16	9.500	9.875	0.070
BU-376H2155-BLK	9-3/4	10-1/8	3/16	9.750	10.125	0.070
BU-377H2155-BLK	10	10-3/8	3/16	10.000	10.375	0.070
BU-379H2155-BLK	11	11-3/8	3/16	11.000	11.375	0.070
.250" - CROSS SECTION WIDTH						
BU-425H2155-BLK	4-1/2	5	1/4	4.500	5.000	0.105
BU-426H2155-BLK	4-5/8	5-1/8	1/4	4.625	5.125	0.105
BU-427H2155-BLK	4-3/4	5-1/4	1/4	4.750	5.250	0.105
BU-428H2155-BLK	4-7/8	5-3/8	1/4	4.875	5.375	0.105
BU-429H2155-BLK	5	5-1/2	1/4	5.000	5.500	0.105
BU-430H2155-BLK	5-1/8	5-5/8	1/4	5.125	5.625	0.105
BU-431H2155-BLK	5-1/4	5-3/4	1/4	5.250	5.750	0.105
BU-432H2155-BLK	5-3/8	5-7/8	1/4	5.375	5.875	0.105
BU-433H2155-BLK	5-1/2	6	1/4	5.500	6.000	0.105
BU-434H2155-BLK	5-5/8	6-1/8	1/4	5.625	6.125	0.105
BU-435H2155-BLK	5-3/4	6-1/4	1/4	5.750	6.250	0.105
BU-436H2155-BLK	5-7/8	6-3/8	1/4	5.875	6.375	0.105
BU-437H2155-BLK	6	6-1/2	1/4	6.000	6.500	0.105
BU-438H2155-BLK	6-1/4	6-3/4	1/4	6.250	6.750	0.105
BU-439H2155-BLK	6-1/2	7	1/4	6.500	7.000	0.105
BU-440H2155-BLK	6-3/4	7-1//4	1/4	6.750	7.250	0.105
BU-441H2155-BLK	7	7-1/2	1/4	7.000	7.500	0.105
BU-442H2155-BLK	7-1/4	7-3/4	1/4	7.250	7.750	0.105
BU-443H2155-BLK	7-1/2	8	1/4	7.500	8.000	0.105
BU-444H2155-BLK	7-3/4	8-1/4	1/4	7.750	8.250	0.105
BU-445H2155-BLK	8	8-1/2	1/4	8.000	8.500	0.105
BU-446H2155-BLK	8-1/2	9	1/4	8.500	9.000	0.105
BU-447H2155-BLK	9	9-1/2	1/4	9.000	9.500	0.105
BU-448H2155-BLK	9-1/2	10	1/4	9.500	10.000	0.105
BU-449H2155-BLK	10	10-1/2	1/4	10.000	10.500	0.105
BU-450H2155-BLK	10-1/2	11	1/4	10.500	11.000	0.105
BU-452H2155-BLK	11	11-1/2	1/4	11.500	12.000	0.105

Compound information available on pages 20-37.

Surface Finish: ISO 4287 & Chamfer Information on pages 7-9.
For ISO tolerance charts, refer to pages 12-13.

MFPSEALS®
www.mfpseals.com

HBU - Block Vee Back-Up Ring

A product of MFP Seals.

HBU - BLOCK VEE BACK-UP RINGS - H2155

MFP Seals produces a Solid HBU Back-Up Ring, made from H2155 (Hytrel®) for use with Block Vee seals in applications where tolerance are not closely held or system pressures may exceed 500 PSI.

The standard compound for this seal is H2155.

MFP PART NUMBER

HBU-0062-4H2155

SEAL TYPE — BLOCK-VEE SIZE (ød1) — COMPOUND

PROFILE / ROD APPLICATION / PISTON APPLICATION

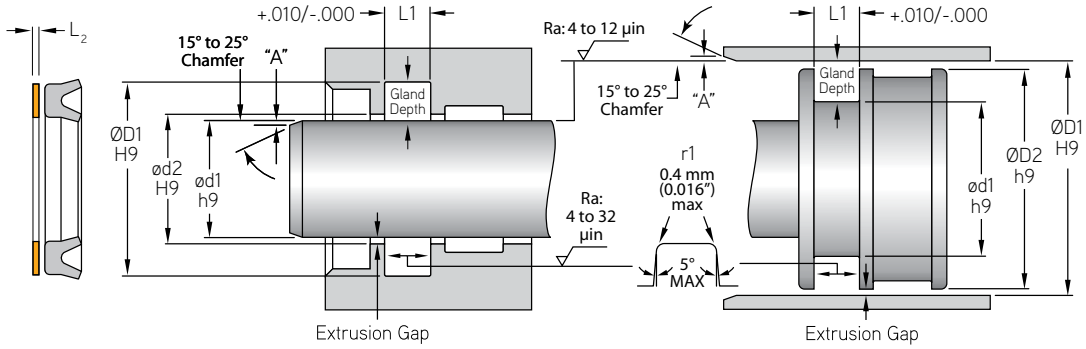

MFP PART NUMBER	ROD OR PISTON APPLICATION (DIMENSION L1 IS ADDED TO U-CUP GROOVE) ød1	ØD1	L1	ød2	ØD2	Gland Depth or Radial C/S
TOLERANCE	h9	H9	+.010/-.000	H9	h9	
HBU-0062-4	0.625	0.875	add 0.062	0.626	0.874	0.125
HBU-0075-4	0.750	1.000	add 0.062	0.751	0.999	0.125
HBU-0075-8	0.750	1.250	add 0.062	0.749	1.549	0.250
HBU-0100-4	1.000	1.250	add 0.062	1.001	1.249	0.125
HBU-0100-5	1.000	1.312	add 0.062	1.001	1.311	0.156
HBU-0100-8	1.000	1.500	add 0.062	1.001	1.499	0.250
HBU-0118-5	1.187	1.500	add 0.062	1.188	1.499	0.157
HBU-0137-5	1.375	1.687	add 0.062	1.376	1.686	0.156
HBU-0150-6	1.500	1.875	add 0.062	1.502	1.874	0.188
HBU-0150-8	1.500	2.000	add 0.062	1.501	1.999	0.250
HBU-0162-6	1.625	2.000	add 0.062	1.627	1.999	0.188
HBU-0175-6	1.750	2.125	add 0.062	1.752	2.124	0.188
HBU-0200-6	2.000	2.375	add 0.062	2.002	2.374	0.188
HBU-0212-6	2.125	2.500	add 0.062	2.127	2.499	0.188
HBU-0250-6	2.500	2.875	add 0.062	2.502	2.874	0.188
HBU-0281-7	2.812	3.250	add 0.062	2.813	3.249	0.219
HBU-0300-7	3.000	3.437	add 0.062	3.001	3.436	0.219
HBU-0350-8	3.500	4.000	add 0.062	3.501	3.999	0.250
HBU-0400-8	4.000	4.500	add 0.062	4.001	4.499	0.250
HBU-0443-9	4.437	5.000	add 0.062	4.438	4.999	0.282
HBU-0450-8	4.500	5.000	add 0.062	4.501	4.999	0.250
HBU-0500-9	5.000	5.562	add 0.062	4.999	5.561	0.282
HBU-0537-10	5.375	6.000	add 0.062	5.377	5.998	0.313
HBU-0543-9	5.437	6.000	add 0.062	5.438	5.999	0.282
HBU-0550-10	5.500	6.125	add 0.062	5.502	6.123	0.313
HBU-0637-10	6.375	7.000	add 0.062	6.377	6.998	0.313
HBU-0737-10	7.375	8.000	add 0.062	7.377	7.998	0.313

Surface Finish: ISO 4287 & Chamfer Information on pages 7-9.
For ISO tolerance charts, refer to pages 12-13.

Compound information available on pages 20-37.

Modular Bearing / Back-Up Ring

A product of MFP Seals.

MFPSEALS®
www.mfpseals.com

MODULAR BEARING

Modular Bearings are a Back-Up Ring designed for use behind the X-Pac® or O-Pac®, loaded U-Cups.

The standard compound for this seal is U2166. This seal is also available in H2155.

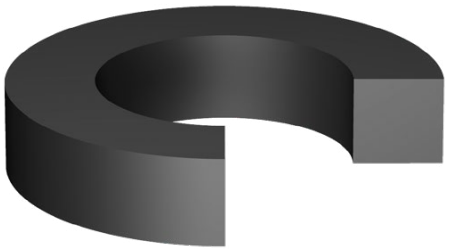

MFP PART NUMBER

MB187-04.375-187U2166

SEAL TYPE | CROSS SECTION | ød1 | B/U HEIGHT | COMPOUND

PROFILE

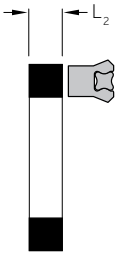

ROD APPLICATION

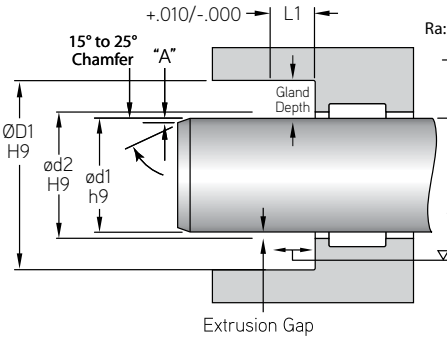

PISTON APPLICATION

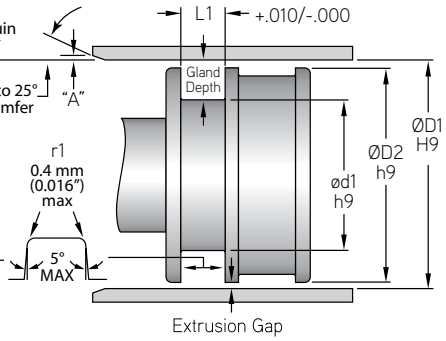

MFP PART NUMBER	ROD OR PISTON APPLICATION (DIMENSION L1 IS ADDED TO U-CUP GROOVE) ød1	ØD1	L1	ød2	ØD2	Gland Depth or Radial C/S
TOLERANCE	h9	H9	+.010/-.000	H9	h9	
MB187-04.375-187U2166	4.375	4.750	0.187	4.376	4.749	0.187
MB250-01.375-250U2166	1.375	1.875	0.250	1.376	1.874	0.250
MB250-04.250-250U2166	4.250	4.750	0.250	4.251	4.749	0.250
MB375-04.250-375U2166	4.250	5.000	0.375	4.251	4.999	0.375
MB500-06.750-500U2166	6.750	7.750	0.500	6.751	7.749	0.500

Compound information available on pages 20-37.

Surface Finish: ISO 4287 & Chamfer Information on pages 7-9.
For ISO tolerance charts, refer to pages 12-13.

MFP SEALS
www.mfpseals.com

TBU Back-Up Ring

A product of MFP Seals.

TBU - SPLIT PTFE BACK-UP RINGS

MFP Seals produces Split PTFE Back-Up Rings, made from T1000 (virgin PTFE) for use with Block-Vee U-Cup seals. The TBU is designed to increase the pressure to heavy-duty ratings for medium-duty rated u-cup seals. The T1000 PTFE is compatible with most fluids and is ideal in applications where temperature or hydraulic media restrict the use of urethane or rubber back-up rings.

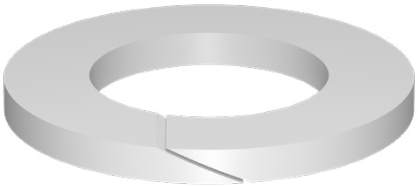

The standard compound for this seal is T1000

MFP PART NUMBER

TBU-0062-4T1000

SEAL TYPE — BLOCK-VEE SIZE ød1 — COMPOUND

PROFILE / ROD APPLICATION / PISTON APPLICATION

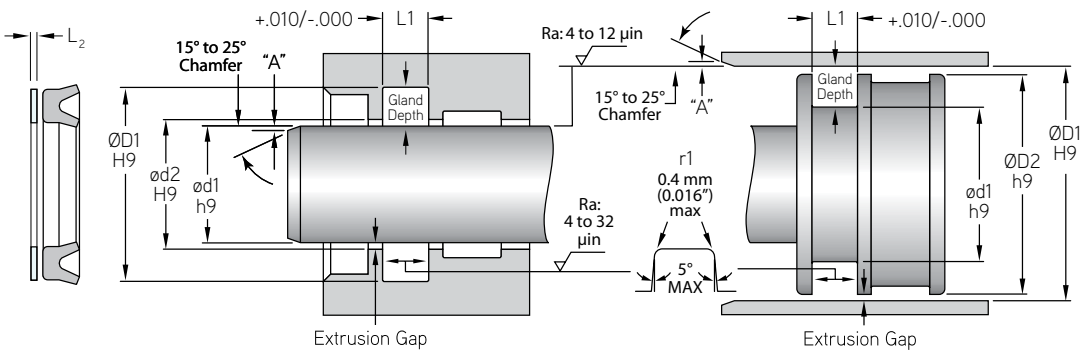

MFP PART NUMBER	ROD OR PISTON APPLICATION ød1	ØD1	L1	ød2	ØD2	Gland Depth or Radial C/S
TOLERANCE	h9	H9	+.010/-.000	H9	h9	
TBU-0037-4	0.375	0.625	add 0.062	0.376	0.624	0.125
TBU-0050-4	0.500	0.750	add 0.062	0.501	0.749	0.125
TBU-0062-4	0.625	0.875	add 0.062	0.626	0.874	0.125
TBU-0075-4	0.750	1.000	add 0.062	0.751	0.999	0.125
TBU-0081-4	0.813	1.063	add 0.062	0.813	1.062	0.125
TBU-0087-4	0.875	1.125	add 0.062	0.876	1.124	0.125
TBU-0093-4	0.938	1.188	add 0.062	0.938	1.186	0.125
TBU-0100-4	1.000	1.250	add 0.062	1.001	1.249	0.125
TBU-0100-5	1.000	1.313	add 0.062	1.001	1.312	0.156
TBU-0118-5	1.188	1.500	add 0.062	1.189	1.499	0.156
TBU-0137-5	1.375	1.688	add 0.062	1.376	1.687	0.156
TBU-0150-6	1.500	1.875	add 0.062	1.501	1.874	0.188
TBU-0162-6	1.625	2.000	add 0.062	1.626	1.999	0.188
TBU-0175-6	1.750	2.125	add 0.062	1.751	2.124	0.188
TBU-0187-6	1.875	2.250	add 0.062	1.876	2.249	0.188
TBU-0200-6	2.000	2.375	add 0.062	2.001	2.374	0.188
TBU-0212-6	2.125	2.500	add 0.062	2.126	2.499	0.188

Surface Finish: ISO 4287 & Chamfer Information on pages 7-9.
For ISO tolerance charts, refer to pages 12-13.

Compound information available on pages 20-37.

TBU Back-Up Ring

A product of MFP Seals.

MFPSEALS
www.mfpseals.com

PROFILE

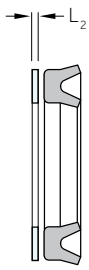

ROD APPLICATION

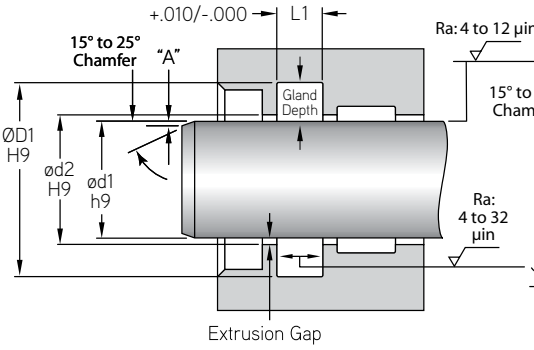

PISTON APPLICATION

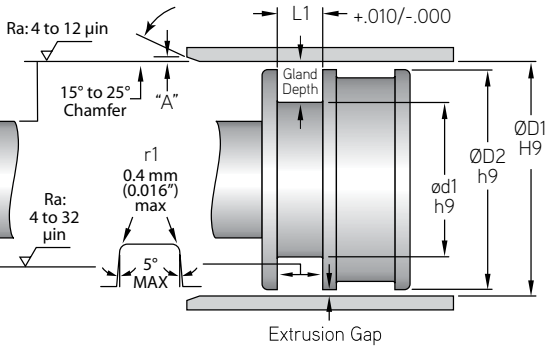

MFP PART NUMBER	ROD OR PISTON APPLICATION ød1	ØD1	L1	ød2	ØD2	Gland Depth or Radial C/S
TOLERANCE	h9	H9	+.010/-.000	H9	h9	
TBU-0225-6	2.250	2.625	add 0.062	2.251	2.624	0.188
TBU-0237-6	2.375	2.750	add 0.062	2.376	2.749	0.188
TBU-0250-6	2.500	2.875	add 0.062	2.501	2.874	0.188
TBU-0281-7	2.813	3.250	add 0.062	2.813	3.249	0.219
TBU-0300-7	3.000	3.438	add 0.062	3.001	3.437	0.219
TBU-0350-8	3.500	4.000	add 0.062	3.502	3.998	0.250
TBU-0400-8	4.000	4.500	add 0.062	4.001	4.499	0.250
TBU-0443-9	4.438	5.000	add 0.062	4.438	4.999	0.281
TBU-0500-9	5.000	5.563	add 0.062	5.001	5.562	0.281
TBU-0512-14	5.125	6.000	add 0.062	5.126	5.999	0.438
TBU-0525-12	5.250	6.000	add 0.062	5.252	5.998	0.375
TBU-0537-10	5.375	6.000	add 0.062	5.377	5.998	0.313
TBU-0550-10	5.500	6.125	add 0.062	5.502	6.123	0.313
TBU-0543-9	5.438	6.000	add 0.062	5.440	5.998	0.281
TBU-0637-10	6.375	7.000	add 0.062	6.377	6.998	0.313
TBU-0643-9	6.438	7.000	add 0.062	6.440	6.998	0.281
TBU-0737-10	7.375	8.000	add 0.062	7.377	7.998	0.313
TBU-0931-11	9.313	10.000	add 0.062	9.318	9.998	0.344
TBU-1100-16	11.000	12.000	add 0.062	11.002	11.998	0.500
TBU-1125-12	11.250	12.000	add 0.062	11.252	11.998	0.375

Compound information available on pages 20-37.

Surface Finish: ISO 4287 & Chamfer Information on pages 7-9.
For ISO tolerance charts, refer to pages 12-13.

MFPSEALS®
www.mfpseals.com

AN6226 - Symmetrical U-Cup

A product of MFP Seals.

AN6226 - SYMMETRICAL U-CUP

Homogeneous Rubber U-Cups require back-up rings if system pressures exceed 500 PSI. Square section seal, height and C/S are the same.

MFP PART NUMBER

6226-01V7100

SEAL TYPE — AS568D DASH # — COMPOUND

This seal is available in N6001 and V7100.

PROFILE

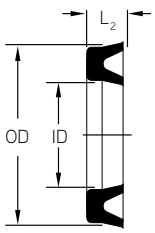

ROD APPLICATION

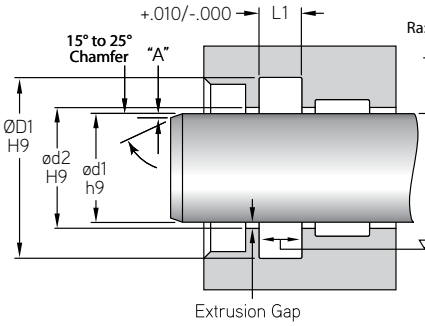

PISTON APPLICATION

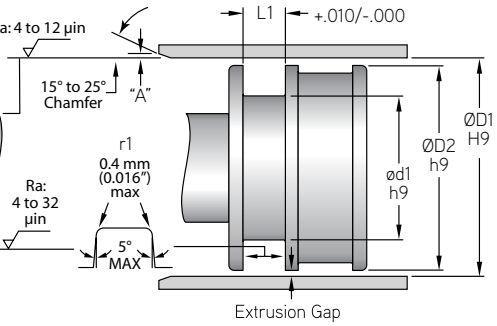

Pressure:
Pneumatic: 17 bar (250 psi) - Hydraulic: 55 bar (800 psi)

Max. Velocity:
Pneumatic: 1.0 m/s (3 ft/s) - Hydraulic: 0.5 m/s (1.5 ft/s)

	ROD OR PISTON APPLICATION					
MFP PART NUMBER	ød1	ød2	ØD1	ØD2	L2	L1
TOLERANCE	h9	H9	H9	h9		+.010/-.000
6226-01	0.125	0.126	0.500	0.498	0.187	0.218
6226-02	0.187	0.188	0.562	0.560	0.187	0.218
6226-03	0.250	0.251	0.625	0.623	0.187	0.218
6226-04	0.312	0.313	0.687	0.685	0.187	0.218
6226-05	0.375	0.376	0.750	0.748	0.187	0.218
6226-06	0.437	0.438	0.812	0.810	0.187	0.218
6226-07	0.500	0.501	0.875	0.873	0.187	0.218
6226-08	0.250	0.251	0.750	0.748	0.250	0.281
6226-09	0.312	0.313	0.812	0.810	0.250	0.281
6226-10	0.375	0.376	0.875	0.873	0.250	0.281
6226-11	0.437	0.438	0.937	0.935	0.250	0.281
6226-12	0.500	0.501	1.000	0.998	0.250	0.281
6226-13	0.562	0.563	1.063	1.061	0.250	0.281
6226-14	0.625	0.626	1.125	1.123	0.250	0.281
6226-15	0.687	0.688	1.188	1.186	0.250	0.281
6226-16	0.750	0.751	1.250	1.248	0.250	0.281

Surface Finish: ISO 4287 & Chamfer Information on pages 7-9.
For ISO tolerance charts, refer to pages 12-13.

Compound information available on pages 20-37.

AN6226 - Symmetrical U-Cup

A product of MFP Seals.

MFPSEALS
www.mfpseals.com

PROFILE

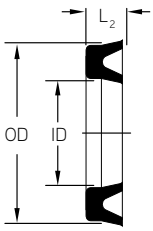

ROD APPLICATION

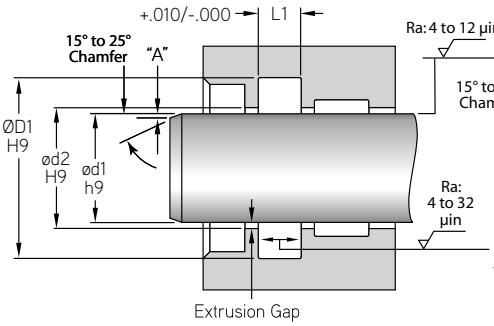

PISTON APPLICATION

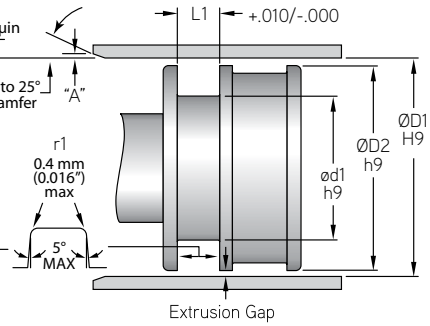

MFP PART NUMBER	ROD OR PISTON APPLICATION ød1	ød2	ØD1	ØD2	L2	L1
TOLERANCE	h9	H9	H9	h9		+.010/-.000
6226-17	0.812	0.813	1.313	1.311	0.250	0.281
6226-18	0.875	0.876	1.375	1.373	0.250	0.281
6226-19	0.937	0.938	1.438	1.436	0.250	0.281
6226-20	1.000	1.001	1.500	1.498	0.250	0.281
6226-21	1.167	1.168	1.562	1.560	0.250	0.281
6226-22	1.125	1.126	1.625	1.623	0.250	0.281
6226-23	1.188	1.189	1.687	1.685	0.250	0.281
6226-24	1.250	1.251	1.750	1.748	0.250	0.281
6226-25	1.250	1.251	1.875	1.873	0.312	0.344
6226-26	1.375	1.376	2.000	1.998	0.312	0.344
6226-27	1.500	1.501	2.125	2.123	0.312	0.344
6226-28	1.625	1.626	2.250	2.248	0.312	0.344
6226-29	1.750	1.751	2.375	2.373	0.312	0.344
6226-30	1.875	1.876	2.500	2.498	0.312	0.344
6226-31	2.000	2.001	2.625	2.623	0.312	0.344
6226-32	2.125	2.126	2.750	2.748	0.312	0.344
6226-33	2.250	2.251	2.875	2.873	0.312	0.344
6226-34	2.375	2.376	3.000	2.998	0.312	0.344
6226-35	2.500	2.501	3.125	3.123	0.312	0.344
6226-36	2.500	2.501	3.250	3.248	0.375	0.406
6226-37	2.625	2.626	3.375	3.373	0.375	0.406
6226-38	2.750	2.751	3.500	3.498	0.375	0.406
6226-39	2.875	2.876	3.625	3.623	0.375	0.406
6226-40	3.000	3.001	3.750	3.748	0.375	0.406
6226-41	0.125	0.126	0.375	0.373	0.125	0.156
6226-42	0.187	0.188	0.437	0.435	0.125	0.156
6226-43	0.250	0.251	0.500	0.498	0.125	0.156
6226-44	0.312	0.313	0.562	0.560	0.125	0.156
6226-45	0.375	0.376	0.625	0.623	0.125	0.156
6226-46	0.437	0.438	0.687	0.685	0.125	0.156
6226-47	0.500	0.501	0.750	0.748	0.125	0.156
6226-48	0.625	0.626	1.000	0.998	0.187	0.218

Compound information available on pages 20-37.

Surface Finish: ISO 4287 & Chamfer Information on pages 7-9.
For ISO tolerance charts, refer to pages 12-13.

MFPSEALS®
www.mfpseals.com

AN6226 - Symmetrical U-Cup

A product of MFP Seals.

PROFILE

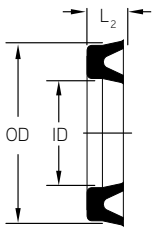

ROD APPLICATION

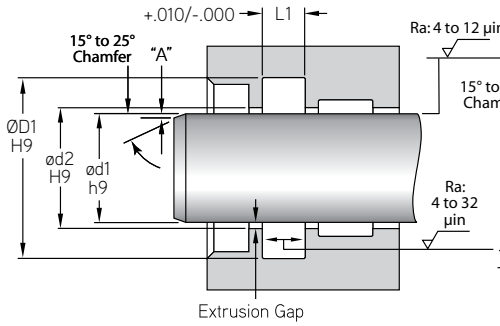

PISTON APPLICATION

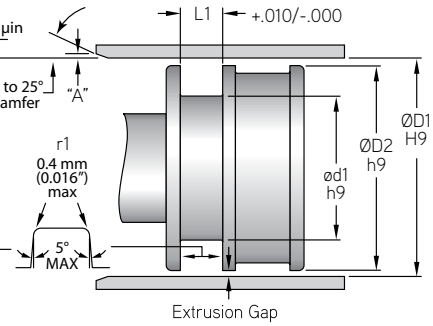

MFP PART NUMBER	ROD OR PISTON APPLICATION					
	ød1	ød2	ØD1	ØD2	L2	L1
TOLERANCE	h9	H9	H9	h9		+.010/-.000
6226-49	0.750	0.751	1.125	1.123	0.187	0.218
6226-50	0.875	0.876	1.250	1.248	0.187	0.218
6226-51	1.000	1.001	1.375	1.373	0.187	0.218
6226-52	1.125	1.126	1.500	1.498	0.187	0.218
6226-53	1.250	1.251	1.625	1.623	0.187	0.218
6226-60	3.250	3.251	4.000	3.998	0.375	0.406
6226-63	3.750	3.751	4.500	4.498	0.375	0.406
6226-65	4.250	4.251	5.000	4.998	0.375	0.406
6226-70	5.125	5.126	6.000	5.998	0.437	0.481
6226-75	6.125	6.126	7.000	6.998	0.437	0.481
6226-80	7.000	7.001	8.000	7.998	0.500	0.550
6226-81	7.500	7.501	8.250	8.248	0.375	0.406
6226-82	8.000	8.001	9.000	8.998	0.500	0.550
6226-85	9.000	9.001	10.000	9.998	0.500	0.550
6226-90	11.000	11.001	12.000	11.998	0.500	0.550
6226-95	13.000	13.001	14.000	13.998	0.500	0.550

Surface Finish: ISO 4287 & Chamfer Information on pages 7-9.
For ISO tolerance charts, refer to pages 12-13.

Compound information available on pages 20-37.

Block Vee - Symmetrical U-Cup

A product of MFP Seals.

MFPSEALS®
www.mfpseals.com

BLOCK VEE - SYMMETRICAL U-CUP

Block Vee Style U-Cups are very popular in industrial cylinders and can be used as piston or rod seals. Back-up rings are available and required for use above 500 PSI. When used with back-up rings, system pressure should not exceed 2,500 PSI. Style 74 or H rod wipers are required when used as a rod seal. Simple design, used when long service life is required.

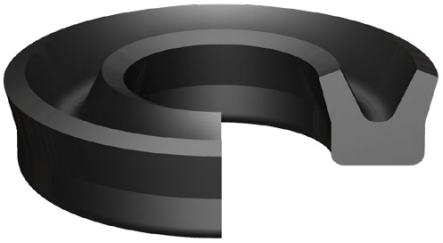

MFP PART NUMBER

BV-0012-3N6015

SEAL TYPE — INSIDE DIAMETER — C/S OR HT IN 32NDS — COMPOUND

This seal is available in compounds N6015, N6023 and V7300.

For increased chemical and temperature resistance, other compounds are available (See pages 20-37).

PROFILE

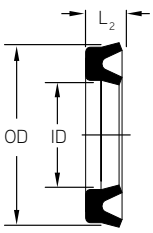

ROD APPLICATION

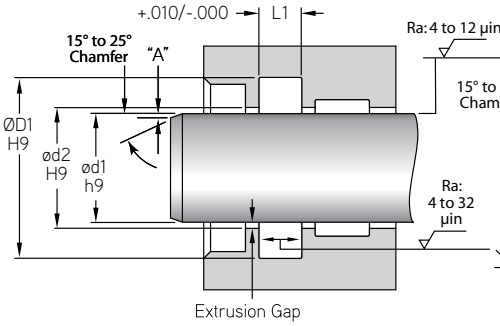

PISTON APPLICATION

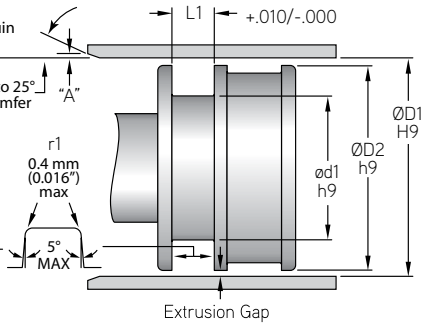

Pressure:
Pneumatic: 17 bar (250 psi) - Hydraulic: 172 bar (2,500 psi)

Max. Velocity:
Pneumatic: 1.0 m/s (3 ft/s) - Hydraulic: 0.5 m/s (1.5 ft/s)

	PISTON APPLICATION						
MFP PART NUMBER	ød1	ød2	ØD1	ØD2	L2	L1	C/S
TOLERANCE	h9	H9	H9	h9		+.010/-.000	
BV-0012-3	0.125	0.126	0.312	0.311	0.093	0.125	0.093
BV-0018-3	0.187	0.188	0.375	0.374	0.093	0.125	0.093
BV-0018-4	0.187	0.188	0.437	0.436	0.125	0.156	0.125
BV-0025-4	0.250	0.251	0.500	0.499	0.125	0.156	0.125
BV-0031-4	0.312	0.313	0.562	0.561	0.125	0.156	0.125
BV-0037-4	0.375	0.376	0.625	0.624	0.125	0.156	0.125
BV-0043-4	0.437	0.438	0.687	0.686	0.125	0.156	0.125
BV-0050-4	0.500	0.501	0.750	0.749	0.125	0.156	0.125
BV-0056-4	0.562	0.563	0.812	0.811	0.125	0.156	0.125
BV-0062-4	0.625	0.626	0.875	0.874	0.125	0.156	0.125
BV-0068-4	0.687	0.688	0.937	0.936	0.125	0.156	0.125
BV-0075-4	0.750	0.751	1.000	0.999	0.125	0.156	0.125

Compound information available on pages 20-37.

Surface Finish: ISO 4287 & Chamfer Information on pages 7-9.
For ISO tolerance charts, refer to pages 12-13.

MFPSEALS®
www.mfpseals.com

Block Vee - Symmetrical U-Cup

A product of MFP Seals.

PROFILE

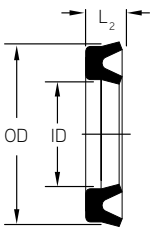

ROD APPLICATION

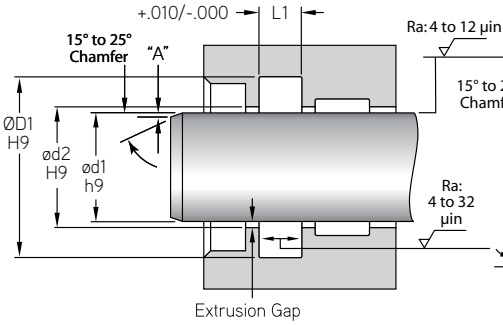

PISTON APPLICATION

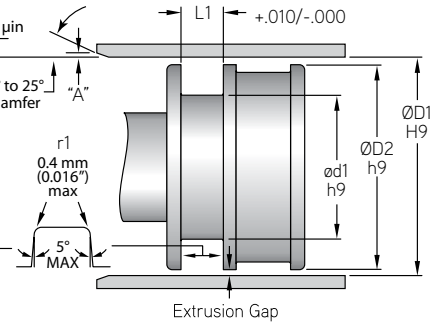

	PISTON APPLICATION						
MFP PART NUMBER	ød1	ød2	ØD1	ØD2	L2	L1	C/S
TOLERANCE	h9	H9	H9	h9		+.010/-.000	
BV-0081-4	0.812	0.813	1.062	1.061	0.125	0.156	0.125
BV-0087-4	0.875	0.876	1.125	1.124	0.125	0.156	0.125
BV-0093-4	0.937	0.938	1.187	1.186	0.125	0.156	0.125
BV-0093-5	0.937	0.938	1.250	1.249	0.156	0.187	0.156
BV-0100-4	1.000	1.001	1.250	1.249	0.125	0.156	0.125
BV-0100-5	1.000	1.001	1.312	1.311	0.156	0.187	0.156
BV-0106-5	1.062	1.063	1.375	1.374	0.156	0.187	0.156
BV-0112-5	1.125	1.126	1.437	1.436	0.156	0.187	0.156
BV-0118-5	1.187	1.188	1.500	1.499	0.156	0.187	0.156
BV-0125-5	1.250	1.251	1.562	1.561	0.156	0.187	0.156
BV-0131-5	1.312	1.313	1.625	1.624	0.156	0.187	0.156
BV-0137-5	1.375	1.376	1.687	1.686	0.156	0.187	0.156
BV-0143-5	1.437	1.438	1.750	1.749	0.156	0.187	0.156
BV-0150-6	1.500	1.501	1.875	1.874	0.187	0.218	0.187
BV-0162-6	1.625	1.626	2.000	1.999	0.187	0.218	0.187
BV-0175-6	1.750	1.751	2.125	2.124	0.187	0.218	0.187
BV-0187-6	1.875	1.876	2.250	2.249	0.187	0.218	0.187
BV-0200-6	2.000	2.001	2.375	2.374	0.187	0.218	0.187
BV-0212-6	2.125	2.126	2.500	2.499	0.187	0.218	0.187
BV-0225-6	2.250	2.251	2.625	2.624	0.187	0.218	0.187
BV-0237-6	2.375	2.376	2.750	2.749	0.187	0.218	0.187
BV-0250-6	2.500	2.501	2.875	2.874	0.187	0.218	0.187
BV-0256-7	2.562	2.563	3.000	2.999	0.218	0.250	0.218
BV-0275-7	2.750	2.751	3.187	3.186	0.218	0.250	0.218
BV-0281-7	2.812	2.813	3.250	3.249	0.218	0.250	0.218
BV-0300-7	3.000	3.001	3.437	3.436	0.218	0.250	0.218
BV-0306-7	3.062	3.063	3.500	3.499	0.218	0.250	0.218
BV-0331-7	3.312	3.313	3.750	3.749	0.218	0.250	0.218
BV-0350-8	3.500	3.501	4.000	3.999	0.250	0.281	0.250
BV-0375-8	3.750	3.751	4.250	4.249	0.250	0.281	0.250
BV-0400-8	4.000	4.001	4.500	4.499	0.250	0.281	0.250

Surface Finish: ISO 4287 & Chamfer Information on pages 7-9.
For ISO tolerance charts, refer to pages 12-13.

Compound information available on pages 20-37.

Block Vee - Symmetrical U-Cup

A product of MFP Seals.

MFPSEALS®
www.mfpseals.com

PROFILE

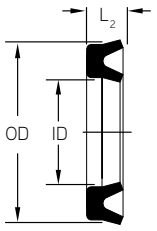

ROD APPLICATION

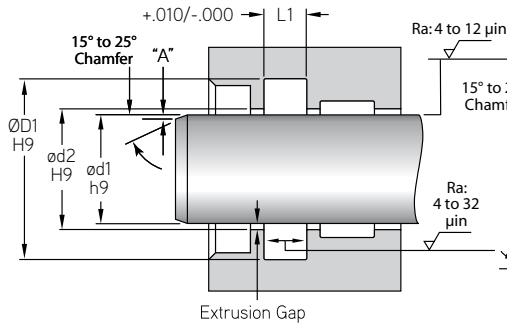

PISTON APPLICATION

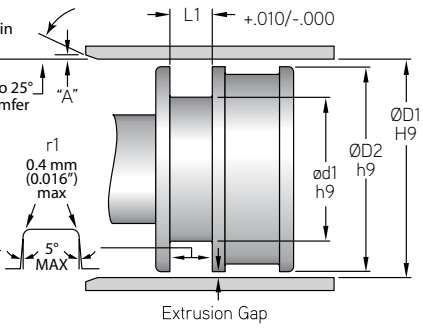

	PISTON APPLICATION						
MFP PART NUMBER	**ød1**	**ød2**	**ØD1**	**ØD2**	**L2**	**L1**	**C/S**
TOLERANCE	h9	H9	H9	h9		+.010/-.000	
BV-0425-8	4.250	4.251	4.750	4.749	0.250	0.281	0.250
BV-0443-9	4.437	4.438	5.000	4.999	0.281	0.312	0.281
BV-0450-8	4.500	4.501	5.000	4.999	0.250	0.281	0.250
BV-0500-9	5.000	5.001	5.562	5.561	0.281	0.312	0.281
BV-0537-10	5.375	5.376	6.000	5.999	0.312	0.344	0.312
BV-0543-9	5.437	5.438	6.000	5.999	0.281	0.312	0.281
BV-0550-10	5.500	5.501	6.125	6.124	0.312	0.344	0.312
BV-0637-10	6.375	6.376	7.000	6.999	0.312	0.344	0.312
BV-0737-10	7.375	7.376	8.000	7.999	0.312	0.344	0.312
BV-0931-11	9.312	9.313	10.000	9.999	0.343	0.375	0.343
BV-1100-16	11.000	11.001	12.000	11.999	0.500	0.550	0.500
BV-1125-12	11.250	11.251	12.000	11.999	0.375	0.406	0.375
BV-1300-16	13.000	13.001	14.000	13.999	0.500	0.550	0.500

Compound information available on pages 20-37.

Surface Finish: ISO 4287 & Chamfer Information on pages 7-9.
For ISO tolerance charts, refer to pages 12-13.

MFPSEALS®
www.mfpseals.com

HU Series - Symmetrical U-Cup

A product of MFP Seals.

HU SERIES - SYMMETRICAL U-CUP

HU Series Symmetrical U-Cups can be used in piston or rod applications. Made from urethane, these seals are the standard in mobile hydraulic cylinders.

This seal is available in U2145, U2150, U2151, U2162, U4150, and H2155.

MFP PART NUMBER

HU125-00.500-250U2145

SEAL TYPE | C/S | INSIDE DIAMETER | L2 | COMPOUND

PROFILE **ROD APPLICATION** **PISTON APPLICATION**

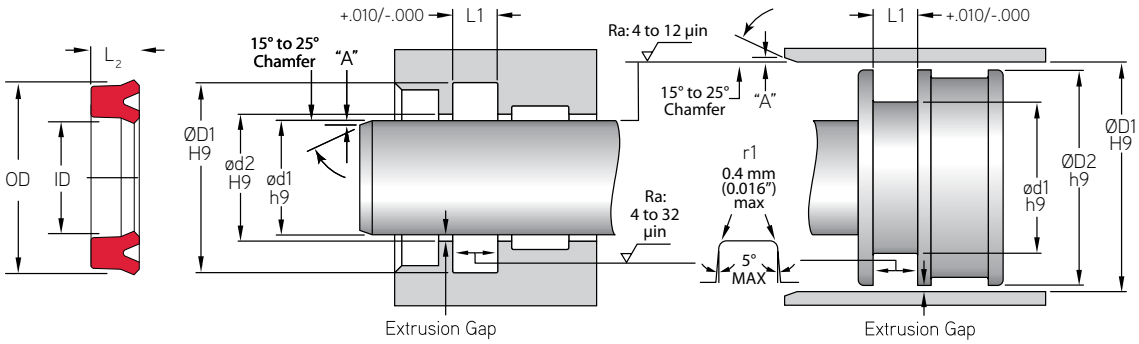

Pressure: 350 Bar (5,000 psi) **Max. Velocity:** 0.5 m/s (< 1.6 ft./s)

MAXIMUM EXTRUSION GAP RECOMMENDATION

MFP SERIES	ROD DIAMETER	GROOVE DIAMETER	GROOVE WIDTH	RADIAL CLEARANCE EXTRUSION GAP		
	ød1 h9	**ØD1** H9	**L1** +.010	2300psi	3600psi	5000psi
HU-125	0.500 - 1.750	ød1 + 0.250	0.138 - 0.275	0.008	0.004	–
HU-156	0.187 - 1.375	ød1 + 0.312	0.240 - 0.275	0.014	0.008	–
HU-187	0.500 - 5.500	ød1 + 0.375	0.207 - 0.413	0.014	0.008	–
HU-218	0.500 - 3.000	ød1 + 0.437	0.275 - 0.343	0.014	0.008	–
HU-250	0.500 - 6.250	ød1 + 0.500	0.275 - 0.618	0.018	0.010	0.004
HU-281	0.625	ød1 + 0.562	0.413	0.018	0.010	0.004
HU-312	1.250 - 5.500	ød1 + 0.625	0.344 - 0.963	0.020	0.012	0.006
HU-375	1.250 - 7.250	ød1 + 0.750	0.413 - 0.688	0.020	0.012	0.006
HU-500	4.750 - 7.500	ød1 + 1.000	0.550 - .825	0.024	0.012	0.008

NOTE: The above data are maximum values for extrusion gap.
Material type, pressure, temperature, speed and extrusion gap will affect extrusion resistance.
Maximum values, pressure, speed, temperature and extrusion gap should not be applied continuously nor simultaneously.

PARTS LIST BEGINS ON NEXT PAGE >

HU Series - Symmetrical U-Cup

A product of MFP Seals.

MFPSEALS®
www.mfpseals.com

PROFILE **ROD APPLICATION** **PISTON APPLICATION**

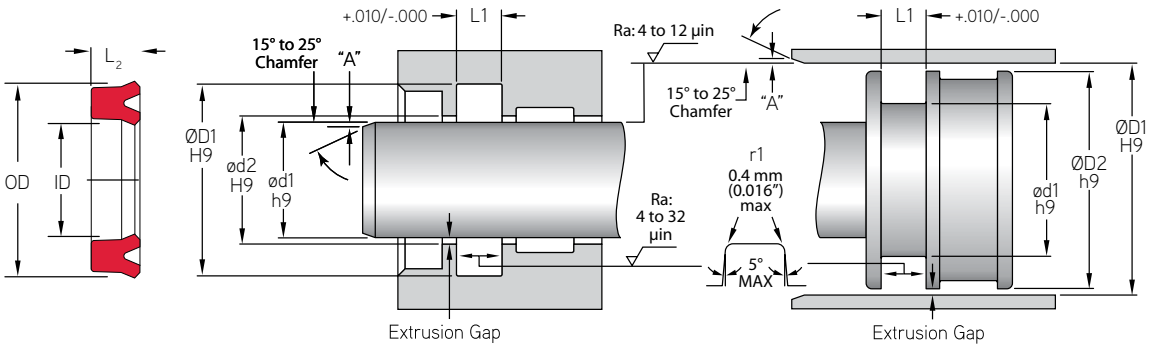

MFP PART NUMBER	ROD OR PISTON APPLICATION					
	ød1	ød2	ØD1	ØD2	L2	L1
.125" - C/S	h9	H9	H9	h9		+.010/-.000
HU125-00.187-187	0.187	0.188	0.437	0.436	0.187	0.206
HU125-00.187-250	0.187	0.188	0.437	0.436	0.250	0.275
HU125-00.250-187	0.250	0.251	0.500	0.499	0.187	0.206
HU125-00.250-250	0.250	0.251	0.500	0.499	0.250	0.275
HU125-00.312-125	0.312	0.313	0.562	0.561	0.125	0.138
HU125-00.375-125	0.375	0.376	0.625	0.624	0.125	0.138
HU125-00.375-250	0.375	0.376	0.625	0.624	0.250	0.275
HU125-00.437-187	0.437	0.438	0.687	0.686	0.187	0.206
HU125-00.500-125	0.500	0.501	0.750	0.749	0.125	0.138
HU125-00.500-250	0.500	0.501	0.750	0.749	0.250	0.275
HU125-00.625-125	0.625	0.626	0.875	0.874	0.125	0.138
HU125-00.625-187	0.625	0.626	0.875	0.874	0.187	0.206
HU125-00.625-250	0.625	0.626	0.875	0.874	0.250	0.275
HU125-00.750-125	0.750	0.751	1.000	0.999	0.125	0.138
HU125-00.750-187	0.750	0.751	1.000	0.999	0.187	0.206
HU125-00.750-250	0.750	0.751	1.000	0.999	0.250	0.275
HU125-00.875-250	0.875	0.876	1.125	1.124	0.250	0.275
HU125-00.937-250	0.937	0.938	1.187	1.186	0.250	0.275
HU125-01.000-125	1.000	1.001	1.250	1.249	0.125	0.138
HU125-01.000-156	1.000	1.001	1.250	1.249	0.156	0.171
HU125-01.000-187	1.000	1.001	1.250	1.249	0.187	0.206
HU125-01.000-250	1.000	1.001	1.250	1.249	0.250	0.275
HU125-01.125-125	1.125	1.126	1.375	1.374	0.125	0.138
HU125-01.250-187	1.250	1.251	1.500	1.499	0.187	0.206
HU125-01.250-250	1.250	1.251	1.500	1.499	0.250	0.275
HU125-01.375-187	1.375	1.376	1.625	1.624	0.187	0.206
HU125-01.375-250	1.375	1.376	1.625	1.624	0.250	0.275
HU125-01.500-250	1.500	1.501	1.750	1.749	0.250	0.275
HU125-01.625-250	1.625	1.626	1.875	1.874	0.250	0.275
HU125-01.750-250	1.750	1.751	2.000	1.999	0.250	0.275
.156" - C/S	h9	H9	H9	h9		+.010/-.000
HU156-00.187-250	0.187	0.188	0.500	0.499	0.250	0.275
HU156-00.312-250	0.312	0.313	0.625	0.624	0.250	0.275
HU156-01.000-218	1.000	1.001	1.313	1.312	0.218	0.240
HU156-01.375-218	1.375	1.376	1.688	1.687	0.218	0.240
HU156-01.375-250	1.375	1.376	1.688	1.687	0.250	0.27

Compound information available on pages 20-37.

Surface Finish: ISO 4287 & Chamfer Information on pages 7-9.
For ISO tolerance charts, refer to pages 12-13.

MFPSEALS®
www.mfpseals.com

HU Series - Symmetrical U-Cup

A product of MFP Seals.

PROFILE **ROD APPLICATION** **PISTON APPLICATION**

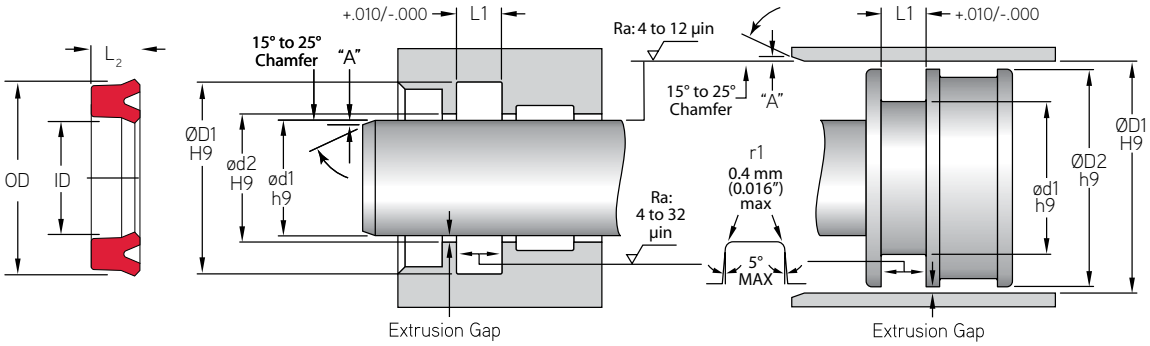

MFP PART NUMBER	ROD OR PISTON APPLICATION					
	ød1	ød2	ØD1	ØD2	L2	L1
.187" - C/S	h9	H9	H9	h9		+.010/-.000
HU187-00.500-312	0.500	0.501	0.875	0.874	0.312	0.343
HU187-00.750-312	0.750	0.751	1.125	1.124	0.312	0.343
HU187-00.812-250	0.812	0.813	1.187	1.186	0.250	0.275
HU187-00.875-250	0.875	0.876	1.250	1.249	0.250	0.275
HU187-00.875-312	0.875	0.876	1.250	1.249	0.312	0.343
HU187-00.937-312	0.937	0.938	1.312	1.311	0.312	0.343
HU187-01.000-187	1.000	1.001	1.375	1.374	0.187	0.206
HU187-01.000-250	1.000	1.001	1.375	1.374	0.250	0.275
HU187-01.000-312	1.000	1.001	1.375	1.374	0.312	0.343
HU187-01.125-187	1.125	1.126	1.500	1.499	0.187	0.206
HU187-01.125-250	1.125	1.126	1.500	1.499	0.250	0.275
HU187-01.125-312	1.125	1.126	1.500	1.499	0.312	0.343
HU187-01.187-312	1.187	1.188	1.562	1.561	0.312	0.343
HU187-01.250-250	1.250	1.251	1.625	1.624	0.250	0.275
HU187-01.250-312	1.250	1.251	1.625	1.624	0.312	0.343
HU187-01.250-375	1.250	1.251	1.625	1.624	0.375	0.413
HU187-01.312-312	1.312	1.313	1.687	1.686	0.312	0.343
HU187-01.375-187	1.375	1.376	1.750	1.749	0.187	0.206
HU187-01.375-250	1.375	1.376	1.750	1.749	0.250	0.275
HU187-01.375-312	1.375	1.376	1.750	1.749	0.312	0.343
HU187-01.500-187	1.500	1.501	1.875	1.874	0.187	0.206
HU187-01.500-250	1.500	1.501	1.875	1.874	0.250	0.275
HU187-01.500-312	1.500	1.501	1.875	1.874	0.312	0.343
HU187-01.500-375	1.500	1.501	1.875	1.874	0.375	0.413
HU187-01.625-187	1.625	1.626	2.000	1.999	0.187	0.206
HU187-01.625-312	1.625	1.626	2.000	1.999	0.312	0.343
HU187-01.625-375	1.625	1.626	2.000	1.999	0.375	0.413
HU187-01.750-250	1.750	1.751	2.125	2.124	0.250	0.275
HU187-01.750-312	1.750	1.751	2.125	2.124	0.312	0.343
HU187-01.750-375	1.750	1.751	2.125	2.124	0.375	0.413
HU187-01.875-187	1.875	1.876	2.250	2.249	0.187	0.206
HU187-02.000-250	2.000	2.001	2.375	2.374	0.250	0.275
HU187-02.000-312	2.000	2.001	2.375	2.374	0.312	0.343
HU187-02.000-375	2.000	2.001	2.375	2.374	0.375	0.413
HU187-02.125-250	2.125	2.126	2.500	2.499	0.250	0.275
HU187-02.125-312	2.125	2.126	2.500	2.499	0.312	0.343
HU187-02.125-375	2.125	2.126	2.500	2.499	0.375	0.413

Surface Finish: ISO 4287 & Chamfer Information on pages 7-9.
For ISO tolerance charts, refer to pages 12-13.

Compound information available on pages 20-37.

HU Series - Symmetrical U-Cup

A product of MFP Seals.

MFPSEALS®
www.mfpseals.com

PROFILE **ROD APPLICATION** **PISTON APPLICATION**

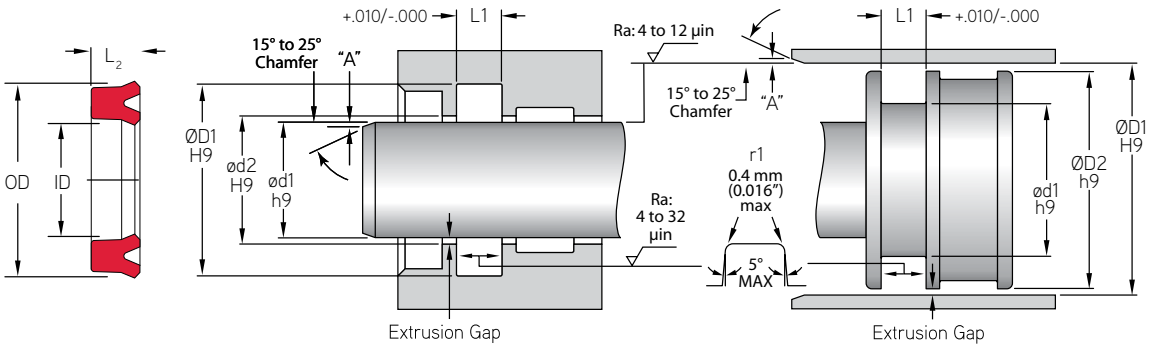

MFP PART NUMBER	ROD OR PISTON APPLICATION					
	ød1	ød2	ØD1	ØD2	L2	L1
.187" - C/S	h9	H9	H9	h9		+.010/-.000
HU187-02.250-312	2.250	2.251	2.625	2.624	0.312	0.343
HU187-02.250-375	2.250	2.251	2.625	2.624	0.375	0.413
HU187-02.500-187	2.500	2.501	2.875	2.874	0.187	0.206
HU187-02.500-312	2.500	2.501	2.875	2.874	0.312	0.343
HU187-02.500-375	2.500	2.501	2.875	2.874	0.375	0.413
HU187-02.625-375	2.625	2.626	3.000	2.999	0.375	0.413
HU187-02.875-375	2.875	2.876	3.250	3.249	0.375	0.413
HU187-03.125-375	3.125	3.126	3.500	3.499	0.375	0.413
HU187-03.625-375	3.625	3.626	4.000	3.999	0.375	0.413
HU187-03.750-375	3.750	3.751	4.125	4.124	0.375	0.413
HU187-05.500-375	5.500	5.501	5.875	5.874	0.375	0.413
.218" - C/S	h9	H9	H9	h9		+.010/-.000
HU218-00.500-250	0.500	0.501	0.937	0.936	0.250	0.275
HU218-02.500-281	2.500	2.501	2.937	2.936	0.281	0.309
HU218-03.000-312	3.000	3.001	3.437	3.436	0.312	0.343
.250" - C/S	h9	H9	H9	h9		+.010/-.000
HU250-00.500-250	0.500	0.501	1.000	0.999	0.250	0.275
HU250-00.625-375	0.625	0.626	1.125	1.124	0.375	0.413
HU250-00.750-250	0.750	0.751	1.250	1.249	0.250	0.275
HU250-00.937-250	0.937	0.938	1.437	1.436	0.250	0.275
HU250-01.000-250	1.000	1.001	1.500	1.499	0.250	0.275
HU250-01.000-375	1.000	1.001	1.500	1.499	0.375	0.413
HU250-01.125-375	1.125	1.126	1.625	1.624	0.375	0.413
HU250-01.187-250	1.187	1.188	1.687	1.686	0.250	0.275
HU250-01.250-250	1.250	1.251	1.750	1.749	0.250	0.275
HU250-01.250-375	1.250	1.251	1.750	1.749	0.375	0.413
HU250-01.375-375	1.375	1.376	1.875	1.874	0.375	0.413
HU250-01.500-250	1.500	1.501	2.000	1.999	0.250	0.275
HU250-01.500-312	1.500	1.501	2.000	1.999	0.312	0.343
HU250-01.500-375	1.500	1.501	2.000	1.999	0.375	0.413
HU250-01.625-312	1.625	1.626	2.125	2.124	0.312	0.343
HU250-01.625-375	1.625	1.626	2.125	2.124	0.375	0.413
HU250-01.750-375	1.750	1.751	2.250	2.249	0.375	0.413
HU250-02.000-250	2.000	2.001	2.500	2.499	0.250	0.275
HU250-02.000-375	2.000	2.001	2.500	2.499	0.375	0.413
HU250-02.125-375	2.125	2.126	2.625	2.624	0.375	0.413
HU250-02.250-375	2.250	2.251	2.750	2.749	0.375	0.413

Compound information available on pages 20-37.

Surface Finish: ISO 4287 & Chamfer Information on pages 7-9.
For ISO tolerance charts, refer to pages 12-13.

MFPSEALS®
www.mfpseals.com

HU Series - Symmetrical U-Cup

A product of MFP Seals.

PROFILE **ROD APPLICATION** **PISTON APPLICATION**

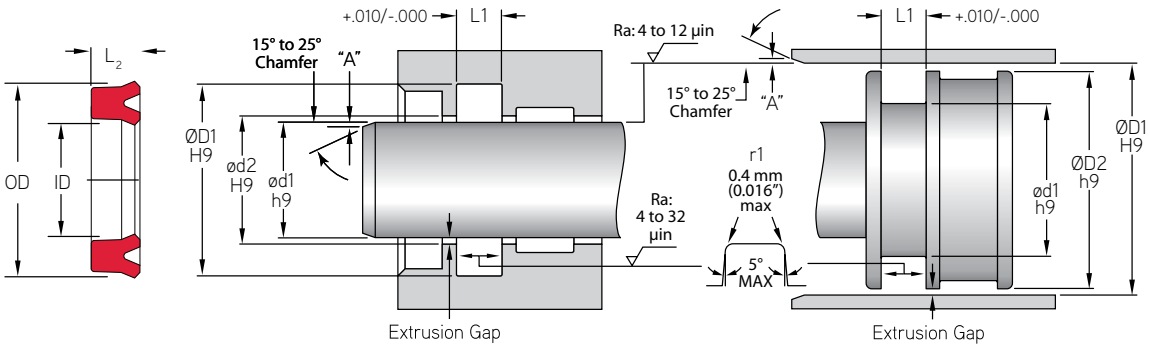

MFP PART NUMBER	ROD OR PISTON APPLICATION					
	ød1	ød2	ØD1	ØD2	L2	L1
.250" - C/S	h9	H9	H9	h9		+.010/-.000
HU250-02.375-250	2.375	2.376	2.875	2.874	0.250	0.275
HU250-02.500-375	2.500	2.501	3.000	2.999	0.375	0.413
HU250-02.500-500	2.500	2.501	3.000	2.999	0.500	0.550
HU250-02.750-250	2.750	2.751	3.250	3.249	0.250	0.275
HU250-02.750-375	2.750	2.751	3.250	3.249	0.375	0.413
HU250-03.000-375	3.000	3.001	3.500	3.499	0.375	0.413
HU250-03.125-375	3.125	3.126	3.625	3.624	0.375	0.413
HU250-03.250-375	3.250	3.251	3.750	3.749	0.375	0.413
HU250-03.500-250	3.500	3.501	4.000	3.999	0.250	0.275
HU250-03.500-312	3.500	3.501	4.000	3.999	0.312	0.343
HU250-03.500-375	3.500	3.501	4.000	3.999	0.375	0.413
HU250-04.000-375	4.000	4.001	4.500	4.499	0.375	0.413
HU250-04.000-500	4.000	4.001	4.500	4.499	0.500	0.550
HU250-04.000-562	4.000	4.001	4.500	4.499	0.562	0.618
HU250-04.250-562	4.250	4.251	4.750	4.749	0.562	0.618
HU250-04.500-312	4.500	4.501	5.000	4.999	0.312	0.343
HU250-04.500-375	4.500	4.501	5.000	4.999	0.375	0.413
HU250-04.500-500	4.500	4.501	5.000	4.999	0.500	0.550
HU250-04.500-562	4.500	4.501	5.000	4.999	0.562	0.618
HU250-04.625-500	4.625	4.626	5.125	5.124	0.500	0.550
HU250-05.000-562	5.000	5.001	5.500	5.499	0.562	0.618
HU250-05.250-562	5.250	5.251	5.750	5.749	0.562	0.618
HU250-05.500-250	5.500	5.501	6.000	5.999	0.250	0.275
HU250-05.500-375	5.500	5.501	6.000	5.999	0.375	0.413
HU250-05.500-562	5.500	5.501	6.000	5.999	0.562	0.618
HU250-05.750-375	5.750	5.751	6.250	6.249	0.375	0.413
HU250-06.250-562	6.250	6.251	6.750	6.749	0.562	0.618
.281" - C/S	h9	H9	H9	h9		+.010/-.000
HU281-00.625-375	0.625	0.626	1.187	1.186	0.375	0.413
.312" - C/S	h9	H9	H9	h9		+.010/-.000
HU312-01.250-500	1.250	1.251	1.875	1.874	0.500	0.550
HU312-01.375-312	1.375	1.376	2.000	1.999	0.312	0.343
HU312-01.375-375	1.375	1.376	2.000	1.999	0.375	0.413
HU312-01.375-500	1.375	1.376	2.000	1.999	0.500	0.550
HU312-01.500-312	1.500	1.501	2.125	2.124	0.312	0.343
HU312-01.500-437	1.500	1.501	2.125	2.124	0.437	0.481
HU312-01.750-312	1.750	1.751	2.375	2.374	0.312	0.343

Surface Finish: ISO 4287 & Chamfer Information on pages 7-9.
For ISO tolerance charts, refer to pages 12-13.

Compound information available on pages 20-37.

HU Series - Symmetrical U-Cup

A product of MFP Seals.

MFPSEALS®
www.mfpseals.com

PROFILE **ROD APPLICATION** **PISTON APPLICATION**

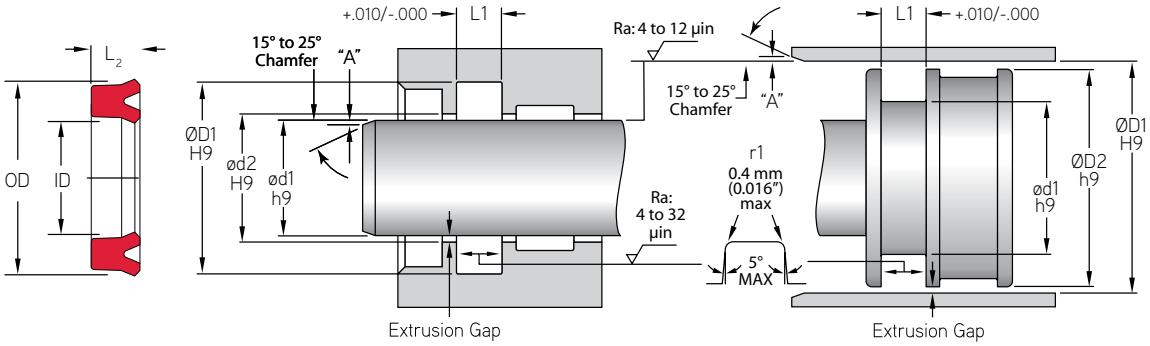

MFP PART NUMBER	ROD OR PISTON APPLICATION					
	ød1	ød2	ØD1	ØD2	L2	L1
.312" - C/S	h9	H9	H9	h9		+.010/-.000
HU312-01.750-375	1.750	1.751	2.375	2.374	0.375	0.413
HU312-01.750-500	1.750	1.751	2.375	2.374	0.500	0.550
HU312-02.000-312	2.000	2.001	2.625	2.624	0.312	0.343
HU312-02.000-500	2.000	2.001	2.625	2.624	0.500	0.550
HU312-02.250-375	2.250	2.251	2.875	2.874	0.375	0.413
HU312-02.250-500	2.250	2.251	2.875	2.874	0.500	0.550
HU312-02.375-500	2.375	2.376	3.000	2.999	0.500	0.550
HU312-02.500-500	2.500	2.501	3.125	3.124	0.500	0.550
HU312-02.875-375	2.875	2.876	3.500	3.499	0.375	0.413
HU312-02.875-500	2.875	2.876	3.500	3.499	0.500	0.550
HU312-03.000-500	3.000	3.001	3.625	3.624	0.500	0.550
HU312-03.375-500	3.375	3.376	4.000	3.999	0.500	0.550
HU312-03.750-500	3.750	3.751	4.375	4.374	0.500	0.550
HU312-03.750-625	3.750	3.751	4.375	4.374	0.625	0.688
HU312-03.750-875	3.750	3.751	4.375	4.374	0.875	0.963
HU312-04.000-375	4.000	4.001	4.625	4.624	0.375	0.413
HU312-04.000-562	4.000	4.001	4.625	4.624	0.562	0.618
HU312-04.375-312	4.375	4.376	5.000	4.999	0.312	0.343
HU312-04.375-375	4.375	4.376	5.000	4.999	0.375	0.413
HU312-04.750-500	4.750	4.751	5.375	5.374	0.500	0.550
HU312-04.750-625	4.750	4.751	5.375	5.374	0.625	0.688
HU312-05.000-375	5.000	5.001	5.625	5.624	0.375	0.413
HU312-05.250-625	5.250	5.251	5.875	5.874	0.625	0.688
HU312-05.375-312	5.375	5.376	6.000	5.999	0.312	0.343
HU312-05.375-375	5.375	5.376	6.000	5.999	0.375	0.413
HU312-05.375-625	5.375	5.376	6.000	5.999	0.625	0.688
HU312-05.500-375	5.500	5.501	6.125	6.124	0.375	0.413
HU312-05.500-500	5.500	5.501	6.125	6.124	0.500	0.550
HU312-05.500-625	5.500	5.501	6.125	6.124	0.625	0.688
.375" - C/S	h9	H9	H9	h9		+.010/-.000
HU375-01.250-375	1.250	1.251	2.000	1.999	0.375	0.413
HU375-01.750-375	1.750	1.751	2.500	2.499	0.375	0.413
HU375-02.000-375	2.000	2.001	2.750	2.749	0.375	0.413
HU375-02.250-375	2.250	2.251	3.000	2.999	0.375	0.413
HU375-02.250-500	2.250	2.251	3.000	2.999	0.500	0.550
HU375-02.375-375	2.375	2.376	3.125	3.124	0.375	0.413
HU375-02.500-375	2.500	2.501	3.250	3.249	0.375	0.413

Compound information available on pages 20-37.

Surface Finish: ISO 4287 & Chamfer Information on pages 7-9.
For ISO tolerance charts, refer to pages 12-13.

MFPSEALS®
www.mfpseals.com

HU Series - Symmetrical U-Cup

A product of MFP Seals.

PROFILE **ROD APPLICATION** **PISTON APPLICATION**

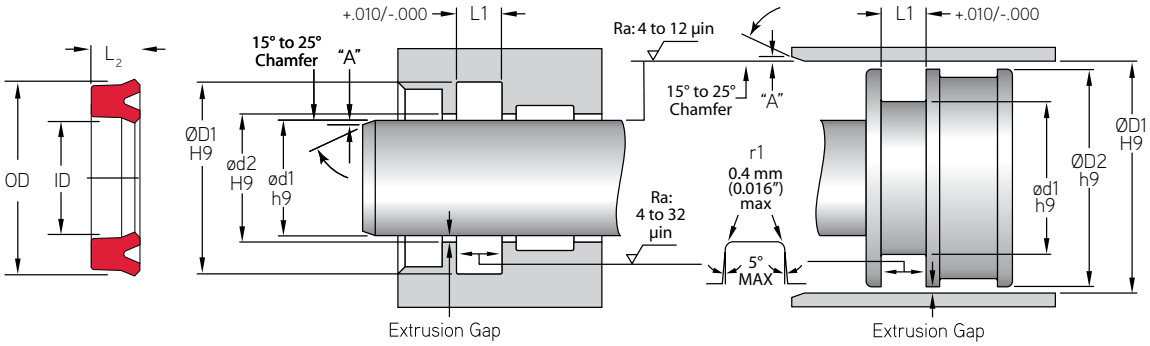

MFP PART NUMBER	ROD OR PISTON APPLICATION					
	ød1	ød2	ØD1	ØD2	L2	L1
.375" - C/S	h9	H9	H9	h9		+.010/-.000
HU375-02.500-500	2.500	2.501	3.250	3.249	0.500	0.550
HU375-02.750-375	2.750	2.751	3.500	3.499	0.375	0.413
HU375-02.750-500	2.750	2.751	3.500	3.499	0.500	0.550
HU375-03.000-375	3.000	3.001	3.750	3.749	0.375	0.413
HU375-03.000-500	3.000	3.001	3.750	3.749	0.500	0.550
HU375-03.000-625	3.000	3.001	3.750	3.749	0.625	0.688
HU375-03.250-375	3.250	3.251	4.000	3.999	0.375	0.413
HU375-03.250-500	3.250	3.251	4.000	3.999	0.500	0.550
HU375-03.250-625	3.250	3.251	4.000	3.999	0.625	0.688
HU375-03.500-500	3.500	3.501	4.250	4.249	0.500	0.550
HU375-03.750-375	3.750	3.751	4.500	4.499	0.375	0.413
HU375-03.750-500	3.750	3.751	4.500	4.499	0.500	0.550
HU375-04.000-500	4.000	4.001	4.750	4.749	0.500	0.550
HU375-04.000-625	4.000	4.001	4.750	4.749	0.625	0.688
HU375-04.250-375	4.250	4.251	5.000	4.999	0.375	0.413
HU375-04.250-500	4.250	4.251	5.000	4.999	0.500	0.550
HU375-04.250-625	4.250	4.251	5.000	4.999	0.625	0.688
HU375-04.500-500	4.500	4.501	5.250	5.249	0.500	0.550
HU375-04.500-625	4.500	4.501	5.250	5.249	0.625	0.688
HU375-04.750-500	4.750	4.751	5.500	5.499	0.500	0.550
HU375-05.250-375	5.250	5.251	6.000	5.999	0.375	0.413
HU375-05.250-500	5.250	5.251	6.000	5.999	0.500	0.550
HU375-05.250-625	5.250	5.251	6.000	5.999	0.625	0.688
HU375-05.500-625	5.500	5.501	6.250	6.249	0.625	0.688
HU375-06.250-375	6.250	6.251	7.000	6.999	0.375	0.413
HU375-06.250-500	6.250	6.251	7.000	6.999	0.500	0.550
HU375-06.250-625	6.250	6.251	7.000	6.999	0.625	0.688
HU375-06.500-625	6.500	6.501	7.250	7.249	0.625	0.688
HU375-07.000-500	7.000	7.001	7.750	7.749	0.500	0.550
HU375-07.250-500	7.250	7.251	8.000	7.999	0.500	0.550
HU375-07.250-625	7.250	7.251	8.000	7.999	0.625	0.688
.500" - C/S	h9	H9	H9	h9		+.010/-.000
HU500-04.750-500	4.750	4.751	5.750	5.749	0.500	0.550
HU500-05.000-500	5.000	5.001	6.000	5.999	0.500	0.550
HU500-05.000-750	5.000	5.001	6.000	5.999	0.750	0.825
HU500-07.000-750	7.000	7.001	8.000	7.999	0.750	0.825
HU500-07.500-750	7.500	7.501	8.500	8.499	0.750	0.825

Surface Finish: ISO 4287 & Chamfer Information on pages 7-9.
For ISO tolerance charts, refer to pages 12-13.

Compound information available on pages 20-37.

O-PAC® Loaded B-Lip - Symmetrical U-Cup

A product of MFP Seals.

MFPSEALS®
www.mfpseals.com

OP - O-PAC® LOADED B-LIP SYMMETRICAL U-CUP

O-PAC® U-Cups are a very versatile reciprocating seal design, for use up to 350 bar (5,000 psi). The rubber expander creates a compression style seal while still operating as a pressure actuated U-Cup design. The result is better low-pressure sealing and less startup leakage. The primary function of a B-Lip O-PAC® is for linear rod applications. However, they can also be used for piston applications when straight lip tooling is not available. MFP Seals' O-PAC® U-Cups feature a knife trimmed sealing lip for increased sealability.

This seal is available in the following compounds: U2145, U2150, U2151, U2162, U4150, H2155, V7675, N6021, N6023, N6034, with an Expander in N6001, V7100 or V7155.

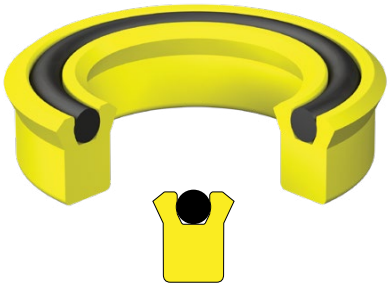

B Lip

MFP PART NUMBER

OP-375-01.000-375BU2145

SEAL TYPE | CROSS SECTION | ød1 | L2 | PROFILE STYLE | COMPOUND

PROFILE STYLE CODES: B = B Lip, No Code for Straight Lip (Standard)

PROFILE **ROD APPLICATION** **PISTON APPLICATION**

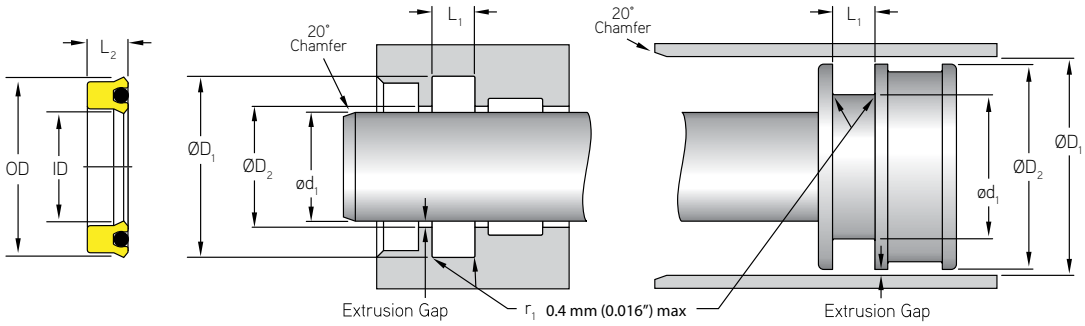

Pressure: 350 bar (5,000 psi) **Max. Velocity:** 0.5 m/s (< 1.6 ft./s)

Contact your MFP Seals Sales Representative for available sizes.

Compound information available on pages 20-37.

Surface Finish: ISO 4287 & Chamfer Information on pages 7-9.
For ISO tolerance charts, refer to pages 12-13.

MFPSEALS
www.mfpseals.com

O-PAC® Loaded B-Lip - Symmetrical U-Cup

A product of MFP Seals.

OP - O-PAC® LOADED STRAIGHT-LIP SYMMETRICAL U-CUP

O-PAC® U-Cups are a very versatile reciprocating seal design, for use up to 350 bar (5,000 psi). The rubber expander creates a compression style seal while still operating as a pressure actuated U-Cup design. The result is better low-pressure sealing and less startup leakage. The primary function of a Straight-Lip O-PAC® is for linear piston applications. MFP Seals' O-PAC® U-Cups feature a knife trimmed sealing lip for increased sealability.

This seal is available in the following compounds: U2145, U2150, U2151, U2162, U4150, H2155, V7675, N6021, N6023, N6034, with an Expander in N6001, V7100 or V7155.

Straight-Lip

MFP PART NUMBER

OP-375-01.100-375U2145

SEAL TYPE | CROSS SECTION | ød1 | L2 | COMPOUND

PROFILE STYLE CODES: B = B Lip, No Code for Straight Lip (Standard)

PROFILE **ROD APPLICATION** **PISTON APPLICATION**

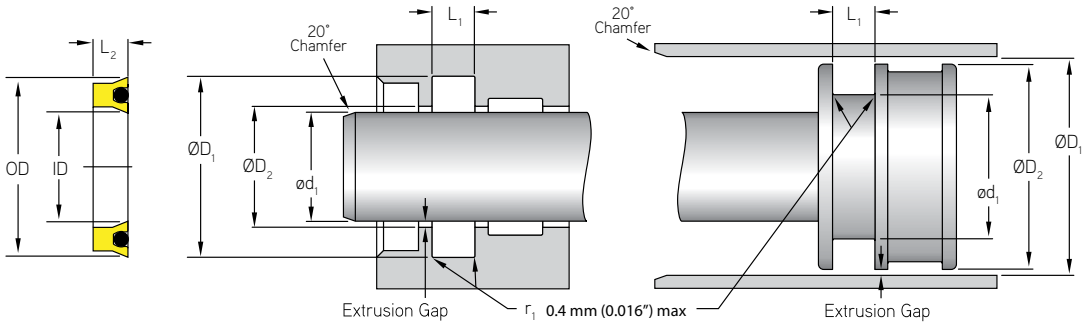

Pressure: 350 bar (5,000 psi) **Max. Velocity:** 0.5 m/s (< 1.6 ft./s)

Contact your MFP Seals Sales Representative for available sizes.

X-PAC® Loaded B-Lip - Symmetrical U-Cup

A product of MFP Seals.

MFPSEALS®
www.mfpseals.com

XP - X-PAC® LOADED B-LIP SYMMETRICAL U-CUP

X-PAC® U-Cups are a very versatile reciprocating seal design, for use up to 350 bar (5,000 psi). The rubber expander creates a compression style seal while still operating as a pressure actuated U-Cup design. The result is better low-pressure sealing and less startup leakage. The primary function of a B-Lip X-PAC® is for linear rod applications. However, they can also be used for piston applications when straight lip tooling is not available. MFP Seals' X-PAC® U-Cups feature a knife trimmed sealing lip for increased sealability.

This seal is available in the following compounds: U2145, U2150, U2151, U2162, U4150, H2155, V7675, N6021, N6023, N6034, with an Expander in N6014, V7100 or V7155.

B Lip

MFP PART NUMBER

XP-125-00.375-125BU2145

SEAL TYPE | CROSS SECTION | ød1 | L2 | PROFILE STYLE | COMPOUND

PROFILE STYLE CODES: B = B Lip, No Code for Straight Lip (Standard)

PROFILE

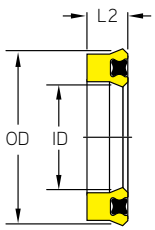

ROD APPLICATION

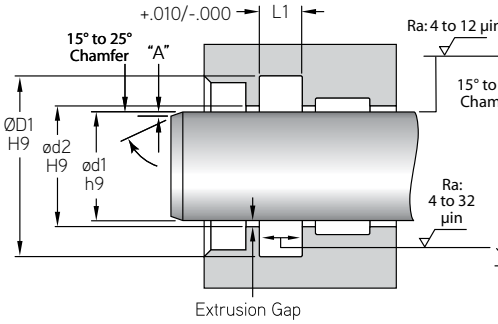

PISTON APPLICATION

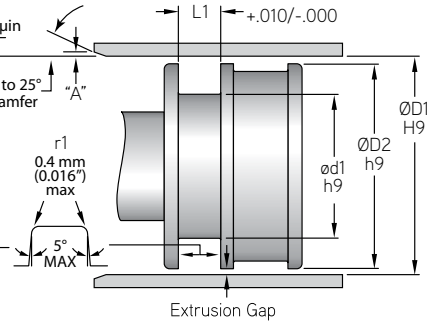

Pressure: 350 bar (5,000 psi) **Max. Velocity:** 0.5 m/s (< 1.6 ft./s)

MAXIMUM EXTRUSION GAP RECOMMENDATION

MFP SERIES	ROD DIAMETER	GROOVE DIAMETER	GROOVE WIDTH	RADIAL CLEARANCE EXTRUSION GAP		
	ød1 h9	**ØD1** H9	**L1** +.010	2300psi	3600psi	5800psi
XP-125	.750 - 2.750	ød1 + .250	.138 - .413	0.008	0.004	-
XP-156	1.375	ød1 + .312	.172	0.014	0.008	-
XP-187	0.625 - 3.750	ød1 + .375	.207 - .413	0.014	0.008	-
XP-250	0.500 - 6.500	ød1 + .500	.275 - .825	0.018	0.010	0.004
XP-312	0.875 - 5.500	ød1 + .624	.344 - .963	0.020	0.012	0.006
XP-375	1.250 - 8.750	ød1 + .750	.413 - .688	0.020	0.012	0.006
XP-500	2.750 - 3.000	ød1 + 1.000	.825	0.024	0.012	0.008

NOTE: The above data are maximum values for extrusion gap.
Material type, pressure, temperature, speed and extrusion gap will affect extrusion resistance.
Maximum values, pressure, speed, temperature and extrusion gap should not be applied continuously nor simultaneously.

PARTS LIST BEGINS ON NEXT PAGE >

Compound information available on pages 20-37.

Surface Finish: ISO 4287 & Chamfer Information on pages 7-9.
For ISO tolerance charts, refer to pages 12-13.

MFPSEALS
www.mfpseals.com

X-PAC® Loaded B-Lip - Symmetrical U-Cup

A product of MFP Seals.

PROFILE

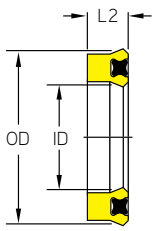

ROD APPLICATION

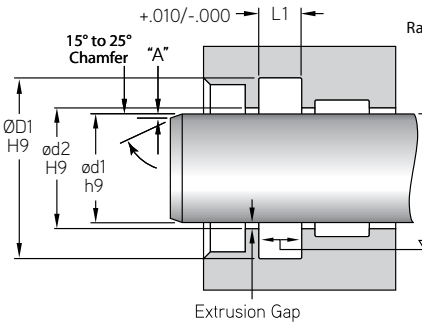

PISTON APPLICATION

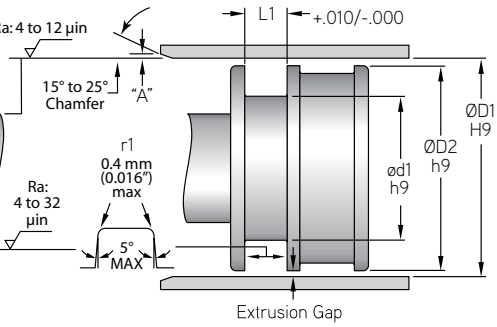

MFP PART NUMBER	NOMINAL SIZE ød1	NOMINAL SIZE ød2	NOMINAL SIZE ØD1	ACTUAL SIZE - ROD OR PISTON APPLICATION ød1	ød2	ØD1	ØD2	L2	L1
.125" - C/S				h9	H9	H9	h9		+.010/-.000
XP-125-00.125-125B	1/8	3/8	1/8	0.125	0.126	0.375	0.374	0.125	0.138
XP-125-00.125-250B	1/8	3/8	1/4	0.125	0.126	0.375	0.374	0.250	0.275
XP-125-00.187-125B	3/16	7/16	1/8	0.187	0.188	0.437	0.436	0.125	0.138
XP-125-00.187-250B	3/16	7/16	1/4	0.187	0.188	0.437	0.436	0.250	0.275
XP-125-00.250-125B	1/4	1/2	1/8	0.250	0.251	0.500	0.499	0.125	0.138
XP-125-00.250-250B	1/4	1/2	1/4	0.250	0.251	0.500	0.499	0.250	0.275
XP-125-00.282-250B	9/32	17/32	1/4	0.282	0.283	0.532	0.531	0.250	0.275
XP-125-00.312-125B	5/16	9/16	1/8	0.312	0.313	0.562	0.531	0.125	0.138
XP-125-00.312-250B	5/16	9/16	1/4	0.312	0.313	0.562	0.561	0.250	0.275
XP-125-00.375-125B	3/8	5/8	1/8	0.375	0.376	0.625	0.561	0.125	0.138
XP-125-00.375-250B	3/8	5/8	1/4	0.375	0.376	0.625	0.624	0.250	0.275
XP-125-00.437-125B	7/16	11/16	1/8	0.437	0.438	0.687	0.686	0.125	0.138
XP-125-00.437-250B	7/16	11/16	1/4	0.437	0.438	0.687	0.686	0.250	0.275
XP-125-00.437-375B	7/16	11/16	3/8	0.437	0.438	0.687	0.686	0.375	0.413
XP-125-00.500-125B	1/2	3/4	1/8	0.500	0.501	0.750	0.749	0.125	0.138
XP-125-00.500-175B	1/2	3/4	0.175	0.500	0.501	0.750	0.749	0.175	0.193
XP-125-00.500-250B	1/2	3/4	1/4	0.500	0.501	0.750	0.749	0.250	0.275
XP-125-00.562-125B	9/16	13/16	1/8	0.562	0.563	0.812	0.811	0.125	0.138
XP-125-00.562-250B	9/16	13/16	1/4	0.562	0.563	0.812	0.811	0.250	0.275
XP-125-00.625-125B	5/8	7/8	1/8	0.625	0.626	0.875	0.874	0.125	0.138
XP-125-00.625-178B	5/8	7/8	3/16	0.625	0.626	0.875	0.874	0.178	0.196
XP-125-00.625-250B	5/8	7/8	1/4	0.625	0.626	0.875	0.874	0.250	0.275
XP-125-00.687-125B	11/16	15/16	1/8	0.687	0.688	0.937	0.936	0.125	0.138
XP-125-00.687-250B	11/16	15/16	1/4	0.687	0.688	0.937	0.936	0.250	0.275
XP-125-00.750-125B	3/4	1	1/8	0.750	0.751	1.000	0.999	0.125	0.138
XP-125-00.750-178B	3/4	1	0.178	0.750	0.751	1.000	0.999	0.178	0.196
XP-125-00.750-187B	3/4	1	3/16	0.750	0.751	1.000	0.999	0.187	0.207
XP-125-00.750-250B	3/4	1	1/4	0.750	0.751	1.000	0.999	0.250	0.275
XP-125-00.812-125B	13/16	1-1/16	1/8	0.812	0.813	1.062	1.061	0.125	0.138
XP-125-00.812-250B	13-16	1-1/16	1/4	0.812	0.813	1.062	1.061	0.250	0.275
XP-125-00.875-125B	7/8	1-1/8	1/8	0.875	0.876	1.125	1.124	0.125	0.138
XP-125-00.875-250B	7/8	1-1/8	1/4	0.875	0.876	1.125	1.124	0.250	0.275
XP-125-00.937-125B	15/16	1-3/16	1/8	0.937	0.938	1.223	1.222	0.125	0.138
XP-125-00.937-250B	15/16	1-3/16	1/4	0.937	0.938	1.223	1.222	0.250	0.275
XP-125-01.000-125B	1	1-1/4	1/8	1.000	1.001	1.250	1.249	0.125	0.138

Surface Finish: ISO 4287 & Chamfer Information on pages 7-9.
For ISO tolerance charts, refer to pages 12-13.

Compound information available on pages 20-37.

X-PAC® Loaded B-Lip - Symmetrical U-Cup

A product of MFP Seals.

MFPSEALS®
www.mfpseals.com

PROFILE

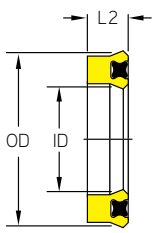

ROD APPLICATION

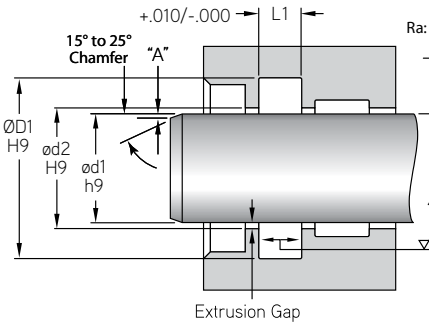

PISTON APPLICATION

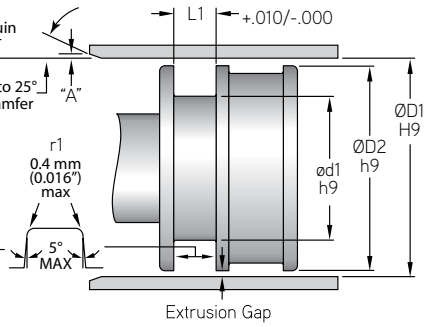

MFP PART NUMBER	NOMINAL SIZE ød1	NOMINAL SIZE ød2	NOMINAL SIZE ØD1	ACTUAL SIZE - ROD OR PISTON APPLICATION ød1	ød2	ØD1	ØD2	L2	L1
.125" - C/S				h9	H9	H9	h9		+.010/-.000
XP-125-01.000-187B	1	1-1/4	3/16	1.000	1.001	1.250	1.249	0.187	0.207
XP-125-01.000-250B	1	1-1/4	1/4	1.000	1.001	1.250	1.249	0.250	0.275
XP-125-01.062-125B	1-1/16	1-5/16	1/8	1.062	1.063	1.312	1.311	0.125	0.138
XP-125-01.062-250B	1-1/16	1-5/16	1/4	1.062	1.063	1.312	1.311	0.250	0.275
XP-125-01.125-125B	1-1/8	1-3/8	1/8	1.125	1.126	1.375	1.374	0.125	0.138
XP-125-01.125-187B	1-1/8	1-3/8	3/16	1.125	1.126	1.375	1.374	0.187	0.207
XP-125-01.125-250B	1-1/8	1-3/8	1/4	1.125	1.126	1.375	1.374	0.250	0.275
XP-125-01.187-125B	1-3/16	1-7/16	1/8	1.187	1.188	1.437	1.436	0.125	0.138
XP-125-01.187-178B	1-3/16	1-7/16	0.178	1.187	1.188	1.437	1.436	0.178	0.196
XP-125-01.187-187B	1-3/16	1-7/16	3/16	1.187	1.188	1.437	1.436	0.187	0.207
XP-125-01.187-250B	1-3/16	1-7/16	1/4	1.187	1.188	1.437	1.436	0.250	0.275
XP-125-01.250-125B	1-1/4	1-1/2	1/8	1.250	1.251	1.500	1.499	0.125	0.138
XP-125-01.250-187B	1-1/4	1-1/2	3/16	1.250	1.251	1.500	1.499	0.187	0.207
XP-125-01.250-250B	1-1/4	1-1/2	1/4	1.250	1.251	1.500	1.499	0.250	0.275
XP-125-01.312-125B	1-5/16	1-9/16	1/8	1.312	1.313	1.562	1.561	0.125	0.138
XP-125-01.312-187B	1-5/16	1-9/16	3/16	1.312	1.313	1.562	1.561	0.187	0.207
XP-125-01.375-125B	1-3/8	1-5/8	1/8	1.375	1.376	1.625	1.624	0.125	0.138
XP-125-01.375-250B	1-3/8	1-5/8	1/4	1.375	1.376	1.625	1.624	0.250	0.275
XP-125-01.437-125B	1-7/16	1-11/16	1/8	1.437	1.438	1.687	1.686	0.125	0.138
XP-125-01.437-250B	1-7/16	1-11/16	1/4	1.437	1.438	1.687	1.686	0.250	0.275
XP-125-01.500-125B	1-1/2	1-3/4	1/8	1.500	1.501	1.750	1.749	0.125	0.138
XP-125-01.500-187B	1-1/2	1-3/4	3/16	1.500	1.501	1.750	1.749	0.187	0.207
XP-125-01.500-250B	1-1/2	1-3/4	1/4	1.500	1.501	1.750	1.749	0.250	0.275
XP-125-01.625-125B	1-5/8	1-7/8	1/8	1.625	1.626	1.875	1.874	0.125	0.138
XP-125-01.750-125B	1-3/4	2	1/8	1.750	1.751	2.000	1.999	0.125	0.138
XP-125-01.750-250B	1-3/4	2	1/4	1.750	1.751	2.000	1.999	0.250	0.275
XP-125-02.000-250B	2	2-1/4	1/4	2.000	2.001	2.250	2.249	0.250	0.275
XP-125-02.375-125B	2-3/8	2-5/8	1/8	2.375	2.376	2.625	2.624	0.125	0.138
XP-125-02.375-187B	2-3/8	2-5/8	3/16	2.375	2.376	2.625	2.624	0.187	0.207
XP-125-02.500-125B	2-1/2	2-3/4	1/8	2.500	2.501	2.750	2.749	0.125	0.138
XP-125-02.500-250B	2-1/2	2-3/4	1/4	2.500	2.501	2.750	2.749	0.250	0.275
XP-125-02.750-250B	2-3/4	3	1/4	2.750	2.751	3.000	2.999	0.250	0.275
XP-125-02.750-375B	2-3/4	3	3/8	2.750	2.751	3.000	2.999	0.375	0.413
XP-125-03.000-375B	3	3-1/4	3/8	3.000	3.001	3.250	3.249	0.375	0.413
XP-125-03.250-125B	3-1/4	3-1/2	1/8	3.250	3.251	3.500	3.499	0.125	0.138

Compound information available on pages 20-37.

Surface Finish: ISO 4287 & Chamfer Information on pages 7-9.
For ISO tolerance charts, refer to pages 12-13.

MFPSEALS®
www.mfpseals.com

X-PAC® Loaded B-Lip - Symmetrical U-Cup

A product of MFP Seals.

PROFILE

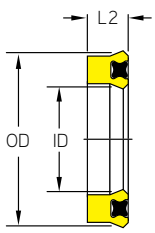

ROD APPLICATION

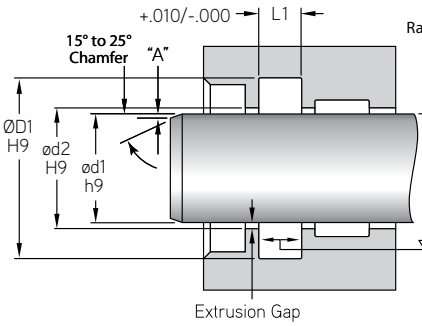

PISTON APPLICATION

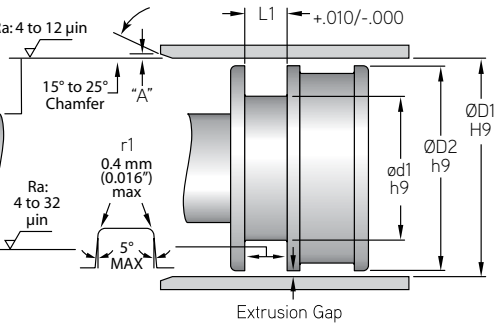

MFP PART NUMBER	NOMINAL SIZE ød1	NOMINAL SIZE ød2	NOMINAL SIZE ØD1	ACTUAL SIZE - ROD OR PISTON APPLICATION ød1	ød2	ØD1	ØD2	L2	L1
.125" - C/S				h9	H9	H9	h9		+.010/-.000
XP-125-03.625-187B	3-5/8	3-7/8	3/16	3.625	3.626	3.875	3.874	0.187	0.207
XP-125-03.750-250B	3-3/4	4	1/4	3.750	3.751	4.000	3.999	0.250	0.275
XP-125-04.000-125B	4	4-1/4	1/8	4.000	4.001	4.250	4.249	0.125	0.138
XP-125-04.250-125B	4-1/4	4-1/2	1/8	4.250	4.251	4.500	4.499	0.125	0.138
XP-125-04.500-187B	4-1/2	4-3/4	3/16	4.500	4.501	4.750	4.749	0.187	0.207
XP-125-04.750-250B	4-3/4	5	1/4	4.750	4.751	5.000	4.999	0.250	0.275
XP-125-05.000-250B	5	5-1/4	1/4	5.000	5.001	5.250	5.249	0.250	0.275
XP-125-06.250-125B	6-1/4	6-1/2	1/8	6.250	6.251	6.500	6.499	0.125	0.138
.156" - C/S				h9	H9	H9	h9		+.010/-.000
XP-156-01.000-156B	1	1-5/16	5/32	1.000	1.001	1.312	1.311	0.156	0.172
XP-156-01.000-218B	1	1-5/16	7/32	1.000	1.001	1.312	1.311	0.218	0.241
XP-156-01.000-234B	1	1-5/16	0.234	1.000	1.001	1.312	1.311	0.234	0.258
XP-156-01.000-250B	1	1-5/16	1/4	1.000	1.001	1.312	1.311	0.250	0.275
XP-156-01.187-156B	1-3/16	1-1/2	5/32	1.187	1.188	1.500	1.499	0.156	0.172
XP-156-01.375-156B	1-3/8	1-11/16	5/32	1.375	1.376	0.169	1.687	0.156	0.172
XP-156-01.375-218B	1-3/8	1-11/16	7/32	1.375	1.376	1.688	1.687	0.218	0.241
XP-156-01.375-281B	1-3/8	1-11/16	9/32	1.375	1.376	1.688	1.687	0.281	0.309
XP-156-01.500-312B	1-1/2	1-13/16	5/16	1.500	1.501	1.813	1.812	0.312	0.344
.187" - C/S				h9	H9	H9	h9		+.010/-.000
XP-187-00.187-187B	3/16	9/16	3/16	0.187	0.188	0.562	0.561	0.187	0.207
XP-187-00.250-187B	1/4	5/8	3/16	0.250	0.251	0.625	0.624	0.187	0.207
XP-187-00.312-187B	5/16	11/16	3/16	0.312	0.313	0.688	0.687	0.187	0.207
XP-187-00.312-312B	5/16	11/16	5/16	0.312	0.313	0.688	0.687	0.312	0.344
XP-187-00.375-187B	3/8	3/4	3/16	0.375	0.376	0.750	0.749	0.187	0.207
XP-187-00.375-312B	3/8	3/4	5/16	0.375	0.376	0.750	0.749	0.312	0.344
XP-187-00.500-187B	1/2	7/8	3/16	0.500	0.501	0.875	0.874	0.187	0.207
XP-187-00.500-250B	1/2	7/8	1/4	0.500	0.501	0.875	0.874	0.250	0.275
XP-187-00.500-312B	1/2	7/8	5/16	0.500	0.501	0.875	0.874	0.312	0.344
XP-187-00.562-225B	9/16	15/16	0.225	0.562	0.563	0.937	0.936	0.225	0.248
XP-187-00.562-312B	9/16	15/16	5/16	0.562	0.563	0.937	0.936	0.312	0.344
XP-187-00.625-187B	5/8	1	3/16	0.625	0.626	1.000	0.999	0.187	0.207
XP-187-00.625-250B	5/8	1	1/4	0.625	0.626	1.000	0.999	0.250	0.275
XP-187-00.625-312B	5/8	1	5/16	0.625	0.626	1.000	0.999	0.312	0.344
XP-187-00.625-375B	5/8	1	3/8	0.625	0.626	1.000	0.999	0.375	0.413
XP-187-00.687-187B	11/16	1-1/16	3/16	0.687	0.688	1.062	1.061	0.187	0.207

Surface Finish: ISO 4287 & Chamfer Information on pages 7-9.
For ISO tolerance charts, refer to pages 12-13.

Compound information available on pages 20-37.

X-PAC® Loaded B-Lip - Symmetrical U-Cup

A product of MFP Seals.

MFPSEALS®
www.mfpseals.com

PROFILE

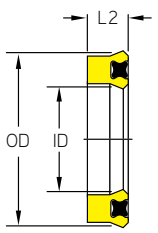

ROD APPLICATION

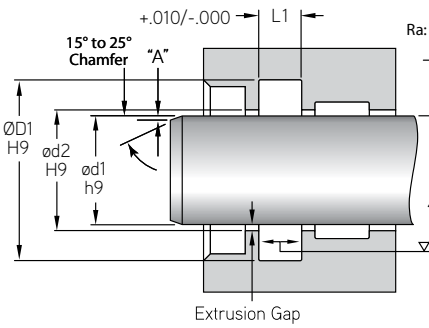

PISTON APPLICATION

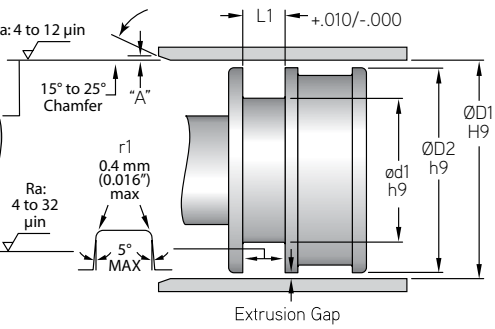

MFP PART NUMBER	NOMINAL SIZE ød1	NOMINAL SIZE ød2	NOMINAL SIZE ØD1	ACTUAL SIZE - ROD OR PISTON APPLICATION ød1	ød2	ØD1	ØD2	L2	L1
.187" - C/S				h9	H9	H9	h9		+.010/-.000
XP-187-00.687-312B	11/16	1-1/16	5/16	0.687	0.688	1.062	1.061	0.312	0.344
XP-187-00.750-187B	3/4	1-1/8	3/16	0.750	0.751	1.125	1.124	0.187	0.207
XP-187-00.750-312B	3/4	1-1/8	5/16	0.750	0.751	1.125	1.124	0.312	0.344
XP-187-00.812-312B	13/16	1-3/16	5/16	0.812	0.813	1.187	1.186	0.312	0.344
XP-187-00.875-187B	7/8	1-1/4	3/16	0.875	0.876	1.250	1.249	0.187	0.207
XP-187-00.875-312B	7/8	1-1/4	5/16	0.875	0.876	1.250	1.249	0.312	0.344
XP-187-00.937-312B	15/16	1-5/16	5/16	0.937	0.938	1.312	1.311	0.312	0.344
XP-187-01.000-187B	1	1-3/8	3/16	1.000	1.001	1.375	1.374	0.187	0.207
XP-187-01.000-250B	1	1-3/8	1/4	1.000	1.001	1.375	1.374	0.250	0.275
XP-187-01.000-266B	1	1-3/8	17/64	1.000	1.001	1.375	1.374	0.266	0.293
XP-187-01.000-312B	1	1-3/8	5/16	1.000	1.001	1.375	1.374	0.312	0.344
XP-187-01.000-375B	1	1-3/8	3/8	1.000	1.001	1.375	1.374	0.375	0.413
XP-187-01.062-187B	1-1/16	1-7/16	3/16	1.062	1.063	1.437	1.436	0.187	0.207
XP-187-01.062-312B	1-1/16	1-7/16	5/16	1.062	1.063	1.437	1.436	0.312	0.344
XP-187-01.125-187B	1-1/8	1-1/2	3/16	1.125	1.126	1.500	1.499	0.187	0.207
XP-187-01.125-250B	1-1/8	1-1/2	1/4	1.125	1.126	1.500	1.499	0.250	0.275
XP-187-01.125-312B	1-1/8	1-1/2	5/16	1.125	1.126	1.500	1.499	0.312	0.344
XP-187-01.125-375B	1-1/8	1-1/2	3/8	1.125	1.126	1.500	1.499	0.375	0.413
XP-187-01.187-187B	1-3/16	1-9/16	3/16	1.187	1.188	1.562	1.561	0.187	0.207
XP-187-01.187-250B	1-3/16	1-9/16	1/4	1.187	1.188	1.562	1.561	0.250	0.275
XP-187-01.187-312B	1-3/16	1-9/16	5/16	1.187	1.188	1.562	1.561	0.312	0.344
XP-187-01.250-187B	1-1/4	1-5/8	3/16	1.250	1.251	1.625	1.624	0.187	0.207
XP-187-01.250-250B	1-1/4	1-5/8	1/4	1.250	1.251	1.625	1.624	0.250	0.275
XP-187-01.250-266B	1-1/4	1-5/8	17/64	1.250	1.251	1.625	1.624	0.266	0.293
XP-187-01.250-312B	1-1/4	1-5/8	5/16	1.250	1.251	1.625	1.624	0.312	0.344
XP-187-01.250-375B	1-1/4	1-5/8	3/8	1.250	1.251	1.625	1.624	0.375	0.413
XP-187-01.312-187B	1-5/16	1-11/16	3/16	1.312	1.313	1.687	1.686	0.187	0.207
XP-187-01.312-312B	1-5/16	1-11/16	5/16	1.312	1.313	1.687	1.686	0.312	0.344
XP-187-01.375-187B	1-3/8	1-3/4	3/16	1.375	1.376	1.750	1.749	0.187	0.207
XP-187-01.375-250B	1-3/8	1-3/4	1/4	1.375	1.376	1.750	1.749	0.250	0.275
XP-187-01.375-266B	1-3/8	1-3/4	17/64	1.375	1.376	1.750	1.749	0.266	0.293
XP-187-01.375-312B	1-3/8	1-3/4	5/16	1.375	1.376	1.750	1.749	0.312	0.344
XP-187-01.375-375B	1-3/8	1-3/4	3/8	1.375	1.376	1.750	1.749	0.375	0.413
XP-187-01.437-250B	1-7/16	1-13/16	1/4	1.437	1.438	1.812	1.811	0.250	0.275
XP-187-01.437-312B	1-7/16	1-3/16	5/16	1.437	1.438	1.187	1.186	0.312	0.344

Compound information available on pages 20-37.

Surface Finish: ISO 4287 & Chamfer Information on pages 7-9.
For ISO tolerance charts, refer to pages 12-13.

MFPSEALS®
www.mfpseals.com

X-PAC® Loaded B-Lip - Symmetrical U-Cup

A product of MFP Seals.

PROFILE

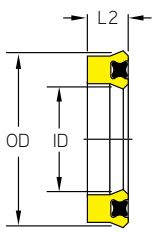

ROD APPLICATION

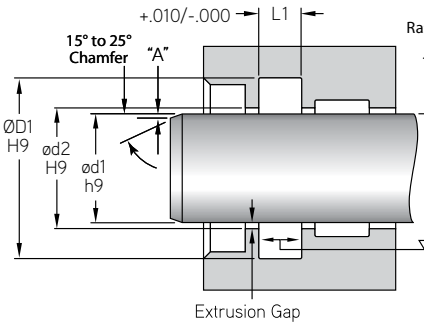

PISTON APPLICATION

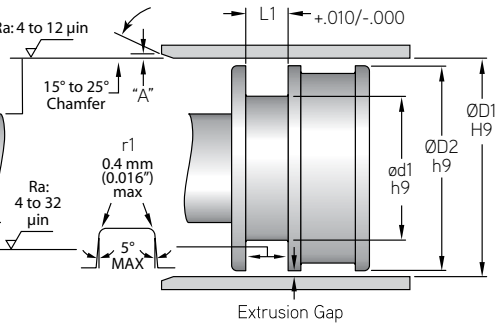

MFP PART NUMBER	NOMINAL SIZE ød1	NOMINAL SIZE ød2	NOMINAL SIZE ØD1	ACTUAL SIZE - ROD OR PISTON APPLICATION ød1	ød2	ØD1	ØD2	L2	L1
.187" - C/S				h9	H9	H9	h9		+.010/-.000
XP-187-01.500-187B	1-1/2	1-7/8	3/16	1.500	1.501	1.875	1.874	0.187	0.207
XP-187-01.500-250B	1-1/2	1-7/8	1/4	1.500	1.501	1.875	1.874	0.250	0.275
XP-187-01.500-260B	1-1/2	1-7/8	0.260	1.500	1.501	1.875	1.874	0.260	0.286
XP-187-01.500-266B	1-1/2	1-7/8	17/64	1.500	1.501	1.875	1.874	0.266	0.293
XP-187-01.500-281B	1-1/2	1-7/8	9/32	1.500	1.501	1.875	1.874	0.281	0.309
XP-187-01.500-290B	1-1/2	1-7/8	0.290	1.500	1.501	1.875	1.874	0.290	0.319
XP-187-01.500-312B	1-1/2	1-7/8	5/16	1.500	1.501	1.875	1.874	0.312	0.344
XP-187-01.500-375B	1-1/2	1-7/8	3/8	1.500	1.501	1.875	1.874	0.375	0.413
XP-187-01.562-187B	1-9/16	1-15/15	3/16	1.562	1.563	1.937	1.936	0.187	0.207
XP-187-01.562-250B	1-9/16	1-15/16	1/4	1.562	1.563	1.937	1.936	0.250	0.275
XP-187-01.562-375B	1-9/16	1-15/16	3/8	1.562	1.563	1.937	1.936	0.375	0.413
XP-187-01.625-187B	1-5/8	2	3/16	1.625	1.626	2.000	1.999	0.187	0.207
XP-187-01.625-250B	1-5/8	2	1/4	1.625	1.626	2.000	1.999	0.250	0.275
XP-187-01.625-266B	1-5/8	2	17/64	1.625	1.636	2.000	1.999	0.266	0.293
XP-187-01.625-312B	1-5/8	2	5/16	1.625	1.626	2.000	1.999	0.312	0.344
XP-187-01.625-375B	1-5/8	2	3/8	1.625	1.626	2.000	1.999	0.375	0.413
XP-187-01.687-187B	1-11/16	2-1/16	3/16	1.687	1.688	2.062	2.061	0.187	0.207
XP-187-01.750-187B	1-3/4	2-1/8	3/16	1.750	1.751	2.125	2.124	0.187	0.207
XP-187-01.750-250B	1-3/4	2-1/8	1/4	1.750	1.751	2.125	2.124	0.250	0.275
XP-187-01.750-266B	1-3/4	2-1/8	17/64	1.750	1.751	2.125	2.124	0.266	0.293
XP-187-01.750-275B	1-3/4	2-1/8	0.275	1.750	1.751	2.125	2.124	0.275	0.303
XP-187-01.750-312B	1-3/4	2-1/8	5/16	1.750	1.751	2.125	2.124	0.312	0.344
XP-187-01.750-375B	1-3/4	2-1/8	3/8	1.750	1.751	2.125	2.124	0.375	0.413
XP-187-01.812-187B	1-53/64	2-7/32	3/16	1.812	1.813	2.187	2.186	0.187	0.207
XP-187-01.875-187B	1-7/8	2-1/4	3/16	1.875	1.876	2.250	2.249	0.187	0.207
XP-187-01.875-250B	1-7/8	2-1/4	1/4	1.875	1.876	2.250	2.249	0.250	0.275
XP-187-01.875-266B	1-7/8	2-1/4	17/64	1.875	1.876	2.250	2.249	0.266	0.293
XP-187-01.875-312B	1-7/8	2-1/4	5/16	1.875	1.876	2.250	2.249	0.312	0.344
XP-187-01.875-375B	1-7/8	2-1/4	3/8	1.875	1.876	2.250	2.249	0.375	0.413
XP-187-02.000-187B	2	2-3/8	3/16	2.000	2.001	2.375	2.374	0.187	0.207
XP-187-02.000-230B	2	2-3/8	0.230	2.000	2.001	2.375	2.374	0.230	0.253
XP-187-02.000-250B	2	2-3/8	1/4	2.000	2.001	2.375	2.374	0.250	0.275
XP-187-02.000-312B	2	2-3/8	5/16	2.000	2.001	2.375	2.374	0.312	0.344
XP-187-02.000-355B	2	2-3/8	0.355	2.000	2.001	2.375	2.374	0.355	0.301
XP-187-02.000-375B	2	2-3/8	3/8	2.000	2.001	2.375	2.374	0.375	0.413

Surface Finish: ISO 4287 & Chamfer Information on pages 7-9.
For ISO tolerance charts, refer to pages 12-13.

Compound information available on pages 20-37.

X-PAC® Loaded B-Lip - Symmetrical U-Cup

A product of MFP Seals.

MFPSEALS®
www.mfpseals.com

PROFILE

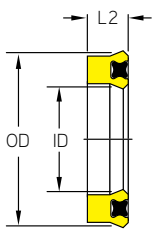

ROD APPLICATION

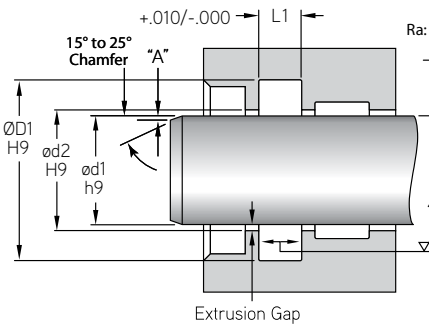

PISTON APPLICATION

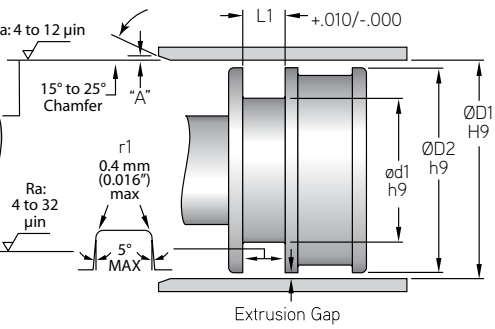

MFP PART NUMBER	NOMINAL SIZE ød1	NOMINAL SIZE ød2	NOMINAL SIZE ØD1	ACTUAL SIZE - ROD OR PISTON APPLICATION ød1	ød2	ØD1	ØD2	L2	L1
.187" - C/S				h9	H9	H9	h9		+.010/-.000
XP-187-02.125-187B	2-1/8	2-1/2	3/16	2.125	2.126	2.500	2.499	0.187	0.207
XP-187-02.125-250B	2-1/8	2-1/2	1/4	2.125	2.126	2.500	2.499	0.250	0.275
XP-187-02.125-266B	2-1/8	2-1/2	17/64	2.125	2.126	2.500	2.499	0.266	0.293
XP-187-02.125-312B	2-1/8	2-1/2	5/16	2.125	2.126	2.500	2.499	0.312	0.344
XP-187-02.125-375B	2-1/8	2-1/2	3/8	2.125	2.126	2.500	2.499	0.375	0.413
XP-187-02.187-375B	2-3/16	2-9/16	3/8	2.187	2.188	2.562	2.561	0.375	0.413
XP-187-02.250-187B	2-1/4	2-5/8	3/16	2.250	2.251	2.625	2.624	0.187	0.207
XP-187-02.250-250B	2-1/4	2-5/8	1/4	2.250	2.251	2.625	2.624	0.250	0.275
XP-187-02.250-312B	2-1/4	2-5/8	5/16	2.225	2.251	2.625	2.624	0.312	0.344
XP-187-02.250-375B	2-1/4	2-5/8	3/8	2.250	2.251	2.625	2.624	0.375	0.413
XP-187-02.375-187B	2-3/8	2-3/4	3/16	2.375	2.376	2.750	2.749	0.187	0.207
XP-187-02.375-250B	2-3/8	2-3/4	1/4	2.375	2.376	2.750	2.749	0.250	0.275
XP-187-02.375-266B	2-3/8	2-3/4	17/64	2.375	2.376	2.750	2.749	0.266	0.293
XP-187-02.375-312B	2-3/8	2-3/4	5/16	2.375	2.376	2.750	2.749	0.312	0.344
XP-187-02.375-375B	2-3/8	2-3/4	3/8	2.375	2.376	2.750	2.749	0.375	0.413
XP-187-02.375-500B	2-3/8	2-3/4	1/2	2.375	2.376	2.750	2.749	0.500	0.550
XP-187-02.437-187B	2-7/16	2-13/16	3/16	2.437	2.438	2.812	2.811	0.187	0.207
XP-187-02.500-187B	2-1/2	2-7/8	3/16	2.500	2.501	2.875	2.874	0.187	0.207
XP-187-02.500-250B	2-1/2	2-7/8	1/4	2.500	2.501	2.875	2.874	0.250	0.275
XP-187-02.500-266B	2-1/2	2-7/8	17/64	2.500	2.501	2.875	2.874	0.266	0.293
XP-187-02.500-312B	2-1/2	2-7/8	5/16	2.500	2.501	2.875	2.874	0.312	0.344
XP-187-02.500-375B	2-1/2	2-7/8	3/8	2.500	2.501	2.875	2.874	0.375	0.413
XP-187-02.625-187B	2-5/8	3	3/16	2.625	2.626	3.000	2.999	0.187	0.207
XP-187-02.625-250B	2-5/8	3	1/4	2.625	2.626	3.000	2.999	0.250	0.275
XP-187-02.625-266B	2-5/8	3	17/64	2.625	2.626	3.000	2.999	0.266	0.293
XP-187-02.625-281B	2-5/8	3	9/32	2.625	2.626	3.000	2.999	0.281	0.309
XP-187-02.625-375B	2-5/8	3	3/8	2.625	2.626	3.000	2.999	0.375	0.413
XP-187-02.750-187B	2-3/4	3-1/8	3/16	2.750	2.751	3.125	3.124	0.187	0.207
XP-187-02.750-312B	2-3/4	3-1/8	5/16	2.750	2.751	3.125	3.124	0.312	0.344
XP-187-02.750-375B	2-3/4	3-1/8	3/8	2.750	2.751	3.125	3.124	0.375	0.413
XP-187-02.875-187B	2-7/8	3-1/4	3/16	2.875	2.876	3.250	3.249	0.187	0.207
XP-187-02.875-250B	2-7/8	3-1/4	1/4	2.875	2.876	3.250	3.249	0.250	0.275
XP-187-02.875-266B	2-7/8	3-1/4	17/64	2.875	2.876	3.250	3.249	0.375	0.413
XP-187-02.875-375B	2-7/8	3-1/4	3/8	2.875	2.876	3.250	3.249	0.375	0.413
XP-187-03.000-187B	3	3-3/8	3/16	3.000	3.001	3.375	3.374	0.187	0.207

Compound information available on pages 20-37.

Surface Finish: ISO 4287 & Chamfer Information on pages 7-9.
For ISO tolerance charts, refer to pages 12-13.

MFPSEALS
www.mfpseals.com

X-PAC® Loaded B-Lip - Symmetrical U-Cup

A product of MFP Seals.

PROFILE

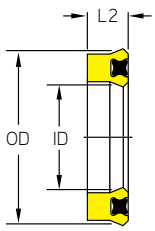

ROD APPLICATION

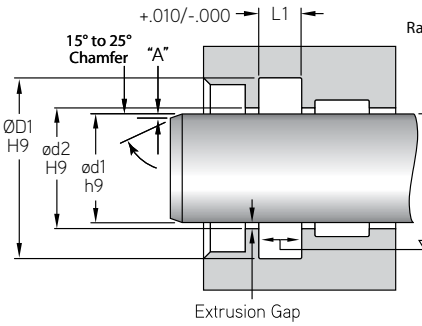

PISTON APPLICATION

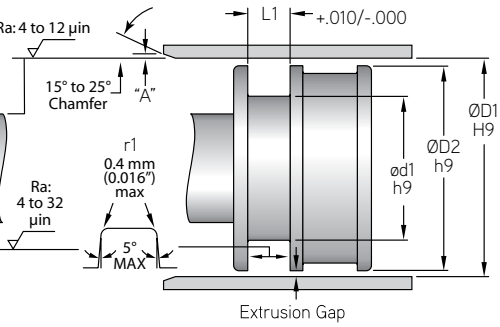

MFP PART NUMBER	NOMINAL SIZE ød1	NOMINAL SIZE ød2	NOMINAL SIZE ØD1	ACTUAL SIZE - ROD OR PISTON APPLICATION ød1	ød2	ØD1	ØD2	L2	L1
.187" - C/S				h9	H9	H9	h9		+.010/-.000
XP-187-03.000-312B	3	3-1/8	5/16	3.000	3.001	3.375	3.374	0.312	0.344
XP-187-03.000-375B	3	3-1/8	3/8	3.000	3.001	3.375	3.374	0.375	0.413
XP-187-03.125-187B	3-1/8	3-1/2	3/16	3.125	3.126	3.500	3.499	0.187	0.207
XP-187-03.125-250B	3-1/8	3-1/2	1/4	3.125	3.126	3.500	3.499	0.250	0.275
XP-187-03.125-312B	3-1/8	3-1/2	5/16	3.125	3.126	3.500	3.499	0.312	0.344
XP-187-03.125-375B	3-1/8	3-1/2	3/8	3.125	3.126	3.500	3.499	0.375	0.413
XP-187-03.250-375B	3-1/4	3-5/8	3/8	3.250	3.251	3.625	3.624	0.375	0.413
XP-187-03.250-500B	3-1/4	3-5/8	1/2	3.250	3.251	3.625	3.624	0.500	0.550
XP-187-03.375-187B	3-3/8	3-3/4	3/16	3.375	3.376	3.750	3.749	0.187	0.207
XP-187-03.375-250B	3-3/8	3-3/4	1/4	3.375	3.376	3.750	3.749	0.250	0.275
XP-187-03.375-375B	3-3/8	3-3/4	3/8	3.375	3.376	3.750	3.749	0.375	0.413
XP-187-03.500-187B	3-1/2	3-7/8	3/16	3.500	3.501	3.875	3.874	0.187	0.207
XP-187-03.500-312B	3-1/2	3-7/8	5/16	3.500	3.501	3.875	3.874	0.312	0.344
XP-187-03.500-375B	3-1/2	3-7/8	3/8	3.500	3.501	3.875	3.874	0.375	0.413
XP-187-03.625-187B	3-5/8	4	3/16	3.625	3.626	4.000	3.999	0.187	0.207
XP-187-03.625-250B	3-5/8	4	1/4	3.625	3.626	4.000	3.999	0.250	0.275
XP-187-03.625-375B	3-5/8	4	3/8	3.625	3.626	4.000	3.999	0.375	0.413
XP-187-03.750-187B	3-3/4	4-1/8	3/16	3.750	3.751	4.125	4.124	0.187	0.207
XP-187-03.750-375B	3-3/4	4-1/8	3/8	3.750	3.751	4.125	4.124	0.375	0.413
XP-187-03.875-375B	3-7/8	4-1/4	3/8	3.875	3.876	4.250	4.249	0.375	0.413
XP-187-04.000-187B	4	4-3/8	3/16	4.000	4.001	4.375	4.374	0.187	0.207
XP-187-04.000-312B	4	4-3/8	5/16	4.000	4.001	4.375	4.374	0.312	0.344
XP-187-04.000-375B	4	4-3/8	3/8	4.000	4.001	4.375	4.374	0.375	0.413
XP-187-04.125-187B	4-1/8	4-1/2	3/16	4.125	4.126	4.500	4.499	0.187	0.207
XP-187-04.125-375B	4-1/8	4-1/2	3/8	4.125	4.126	4.500	4.499	0.375	0.413
XP-187-04.250-375B	4-1/4	4-5/8	3/8	4.250	4.251	4.625	4.624	0.375	0.413
XP-187-04.375-187B	4-1/4	4-5/8	3/16	4.250	4.251	4.625	4.624	0.187	0.207
XP-187-04.375-375B	4-3/8	4-3/4	3/8	4.375	4.376	4.750	4.749	0.375	0.413
XP-187-04.500-250B	4-1/2	4-7/8	1/4	4.500	4.501	4.875	4.874	0.250	0.275
XP-187-04.500-312B	4-1/2	4-7/8	5/16	4.500	4.501	4.875	4.874	0.312	0.344
XP-187-04.500-375B	4-1/2	4-7/8	3/8	4.500	4.501	4.875	4.874	0.375	0.413
XP-187-04.750-187B	4-3/4	5-1/8	3/16	4.750	4.751	5.125	5.124	0.187	0.207
XP-187-04.750-375B	4-3/4	5-1/8	3/8	4.750	4.751	5.125	5.124	0.375	0.413
XP-187-05.000-312B	5	5-3/8	5/16	5.000	5.001	5.375	5.374	0.312	0.344
XP-187-05.000-375B	5	5-3/8	3/8	5.000	5.001	5.375	5.374	0.375	0.413

Surface Finish: ISO 4287 & Chamfer Information on pages 7-9.
For ISO tolerance charts, refer to pages 12-13.

Compound information available on pages 20-37.

X-PAC® Loaded B-Lip - Symmetrical U-Cup

A product of MFP Seals.

MFPSEALS®
www.mfpseals.com

PROFILE

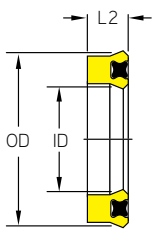

ROD APPLICATION

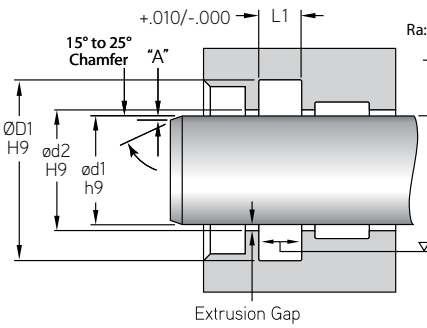

PISTON APPLICATION

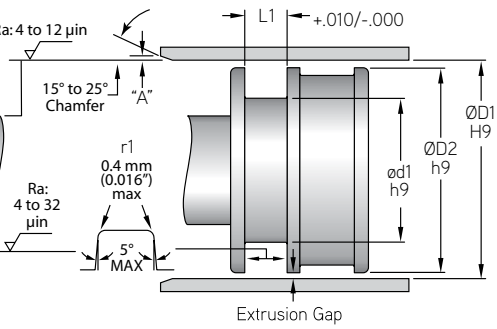

MFP PART NUMBER	NOMINAL SIZE ød1	NOMINAL SIZE ød2	NOMINAL SIZE ØD1	ACTUAL SIZE - ROD OR PISTON APPLICATION ød1	ød2	ØD1	ØD2	L2	L1
.187" - C/S				h9	H9	H9	h9		+.010/-.000
XP-187-05.125-187B	5-1/8	5-1/2	3/16	5.125	5.126	5.500	5.499	0.187	0.207
XP-187-05.250-375B	5-1/4	5-5/8	3/8	5.250	5.251	5.625	5.624	0.375	0.413
XP-187-05.375-375B	5-3/8	5-3/4	3/8	5.375	5.376	5.750	5.749	0.375	0.413
XP-187-05.500-375B	5-1/2	5-7/8	3/8	5.500	5.501	5.875	5.874	0.375	0.413
XP-187-05.625-375B	5-5/8	6	3/8	5.625	5.626	6.000	5.999	0.375	0.413
XP-187-05.750-187B	5-3/4	6-1/8	3/16	5.750	5.751	6.125	6.124	0.187	0.207
XP-187-05.750-375B	5-3/4	6-1/8	3/8	5.750	5.751	6.125	6.124	0.375	0.413
XP-187-06.000-375B	6	6-3/8	3/8	6.000	6.001	6.375	6.374	0.375	0.413
XP-187-06.250-312B	6-1/4	6-5/8	5/16	6.250	6.251	6.625	6.624	0.312	0.344
XP-187-07.500-312B	7-1/2	7-7/8	3/8	7.500	7.501	7.875	7.874	0.312	0.344
.218" - C/S				h9	H9	H9	h9		+.010/-.000
XP-218-01.562-312B	1-9/16	2	5/16	1.562	1.563	2.000	1.999	0.312	0.344
XP-218-02.500-218B	2-1/2	2-15/16	7/32	2.500	2.501	2.937	2.936	0.218	0.241
XP-218-02.500-281B	2-1/2	2-15/16	9/32	2.500	2.501	2.937	2.936	0.281	0.309
XP-218-02.562-218B	2-9/16	3	7/32	2.562	2.563	3.000	2.999	0.218	0.241
XP-218-03.000-218B	3	3-7/16	7/32	3.000	3.001	3.437	3.436	0.218	0.241
XP-218-05.437-562B	5-7/16	5-7/8	9/16	5.437	5.438	5.874	5.873	0.562	0.619
.250" - C/S				h9	H9	H9	h9		+.010/-.000
XP-250-00.375-375B	1-3/8	1-7/8	3/8	0.375	0.376	0.875	0.874	0.375	0.413
XP-250-00.437-375B	7/16	15/16	3/8	0.437	0.438	0.937	0.936	0.375	0.413
XP-250-00.500-250B	1/2	1	1/4	0.500	0.501	1.000	0.999	0.250	0.275
XP-250-00.500-375B	1/2	1	3/8	0.500	0.501	1.000	0.999	0.375	0.413
XP-250-00.562-312B	9/16	1-1/16	5/16	0.562	0.563	1.062	1.061	0.312	0.344
XP-250-00.562-375B	9/16	1-1/16	3/8	0.562	0.563	1.062	1.061	0.375	0.413
XP-250-00.625-375B	5/8	1-1/8	3/8	0.625	0.626	1.125	1.124	0.375	0.413
XP-250-00.687-375B	11/16	1-3/16	3/8	0.687	0.688	1.187	1.186	0.375	0.413
XP-250-00.750-250B	3/4	1-1/4	1/4	0.750	0.751	1.250	1.249	0.250	0.275
XP-250-00.750-375B	3/4	1-1/4	3/8	0.750	0.751	1.250	1.249	0.375	0.413
XP-250-00.750-562B	3/4	1-1/4	9/16	0.750	0.751	1.250	1.249	0.562	0.619
XP-250-00.812-375B	13/16	1-5/16	3/8	0.812	0.813	1.312	1.311	0.375	0.413
XP-250-00.875-250B	7/8	1-3/8	1/4	0.875	0.876	1.375	1.374	0.250	0.275
XP-250-00.875-312B	7/8	1-3/8	5/16	0.875	0.876	1.375	1.374	0.312	0.344
XP-250-00.875-375B	7/8	1-3/8	3/8	0.875	0.876	1.375	1.374	0.375	0.413
XP-250-01.000-250B	1	1-1/2	1/4	1.000	1.001	1.500	1.499	0.250	0.275
XP-250-01.000-375B	1	1-1/2	3/8	1.000	1.001	1.500	1.499	0.375	0.413

Compound information available on pages 20-37.

Surface Finish: ISO 4287 & Chamfer Information on pages 7-9.
For ISO tolerance charts, refer to pages 12-13.

MFPSEALS
www.mfpseals.com

X-PAC® Loaded B-Lip - Symmetrical U-Cup

A product of MFP Seals.

PROFILE

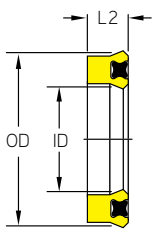

ROD APPLICATION

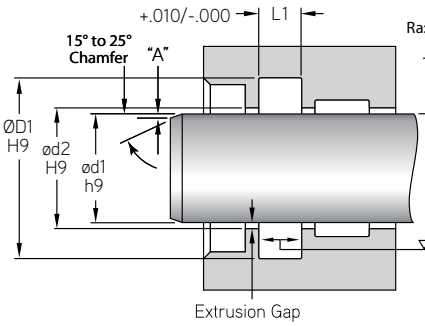

PISTON APPLICATION

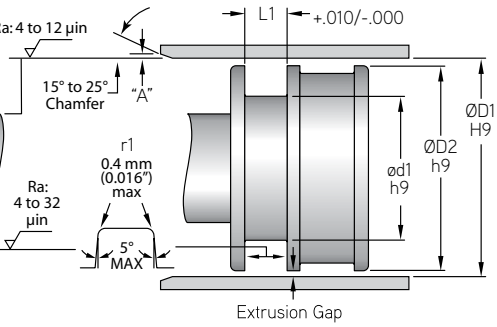

MFP PART NUMBER	NOMINAL SIZE ød1	NOMINAL SIZE ød2	NOMINAL SIZE ØD1	ACTUAL SIZE - ROD OR PISTON APPLICATION ød1	ød2	ØD1	ØD2	L2	L1
.250" - C/S				h9	H9	H9	h9		+.010/-.000
XP-250-01.125-250B	1-1/8	1-5/8	1/4	1.125	1.126	1.625	1.624	0.250	0.275
XP-250-01.125-375B	1-1/8	1-5/8	3/8	1.125	1.126	1.625	1.624	0.375	0.413
XP-250-01.250-250B	1-1/4	1-3/4	1/4	1.250	1.251	1.750	1.749	0.250	0.275
XP-250-01.250-375B	1-1/4	1-3/4	3/8	1.250	1.251	1.750	1.749	0.375	0.413
XP-250-01.312-375B	1-5/16	1-13/16	3/8	1.312	1.313	1.812	1.811	0.375	0.413
XP-250-01.375-250B	1-3/8	1-7/8	1/4	1.375	1.376	1.875	1.874	0.250	0.275
XP-250-01.375-375B	1-3/8	1-7/8	3/8	1.375	1.376	1.875	1.874	0.375	0.413
XP-250-01.437-375B	1-7/16	1-15/16	3/8	1.437	1.438	1.937	1.936	0.375	0.413
XP-250-01.500-250B	1/-1/2	2	1/4	1.500	1.501	2.000	1.999	0.250	0.275
XP-250-01.500-312B	1-1/2	2	5/16	1.500	1.501	2.000	1.999	0.312	0.344
XP-250-01.500-375B	1-1/2	2	3/8	1.500	1.501	2.000	1.999	0.375	0.413
XP-250-01.500-500B	1-1/2	2	1/2	1.500	1.501	2.000	1.999	0.500	0.550
XP-250-01.500-562B	1-1/2	2	9/16	1.500	1.501	2.000	1.999	0.562	0.619
XP-250-01.562-250B	1-5/32	2-1/16	1/4	1.562	1.563	2.062	2.061	0.250	0.275
XP-250-01.562-312B	1-9/16	2-1/16	5/16	1.562	1.563	2.062	2.061	0.312	0.344
XP-250-01.625-312B	1-5/8	2-1/8	5/16	1.625	1.626	2.125	2.124	0.312	0.344
XP-250-01.625-375B	1-5/8	2-1/8	3/8	1.625	1.626	2.125	2.124	0.375	0.413
XP-250-01.750-250B	1-3/4	2-1/4	1/4	1.750	1.751	2.250	2.249	0.250	0.275
XP-250-01.750-312B	1-3/4	2-1/4	5/16	1.750	1.751	2.250	2.249	0.312	0.344
XP-250-01.750-375B	1-3/4	2-1/4	3/8	1.750	1.751	2.250	2.249	0.375	0.413
XP-250-01.750-500B	1-3/4	2-1/4	1/2	1.750	1.751	2.250	2.249	0.500	0.550
XP-250-01.875-375B	1-7/8	2-3/8	3/8	1.875	1.876	2.375	2.374	0.375	0.413
XP-250-02.000-250B	2	2-1/2	1/4	2.000	2.001	2.500	2.499	0.250	0.275
XP-250-02.000-312B	2	2-1/2	5/16	2.000	2.001	2.500	2.499	0.312	0.344
XP-250-02.000-375B	2	2-1/2	3/8	2.000	2.001	2.500	2.499	0.375	0.413
XP-250-02.000-500B	2	2-1/2	1/2	2.000	2.001	2.500	2.499	0.500	0.550
XP-250-02.125-250B	2-1/8	2-5/8	1/4	2.125	2.126	2.625	2.624	0.250	0.275
XP-250-02.125-375B	2-1/8	2-5/8	3/8	2.125	2.126	2.625	2.624	0.375	0.413
XP-250-02.187-375B	2-3/16	2-11/16	3/8	2.187	2.188	2.687	2.686	0.250	0.275
XP-250-02.250-250B	2-1/4	2-3/4	1/4	2.250	2.251	2.750	2.749	0.250	0.275
XP-250-02.250-375B	2-1/4	2-3/4	3/8	2.250	2.251	2.750	2.749	0.375	0.413
XP-250-02.375-375B	2-3/8	2-7/8	3/8	2.375	2.376	2.875	2.874	0.375	0.430
XP-250-02.500-250B	2-1/2	3	1/4	2.500	2.501	3.000	2.999	0.250	0.275
XP-250-02.500-312B	2-1/2	3	5/16	2.500	2.501	3.000	2.999	0.312	0.344
XP-250-02.500-375B	2-1/2	3	3/8	2.500	2.501	3.000	2.999	0.375	0.413

Surface Finish: ISO 4287 & Chamfer Information on pages 7-9.
For ISO tolerance charts, refer to pages 12-13.

Compound information available on pages 20-37.

X-PAC® Loaded B-Lip - Symmetrical U-Cup

A product of MFP Seals.

MFPSEALS®
www.mfpseals.com

PROFILE

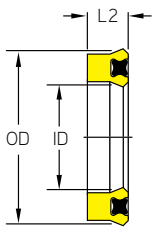

ROD APPLICATION

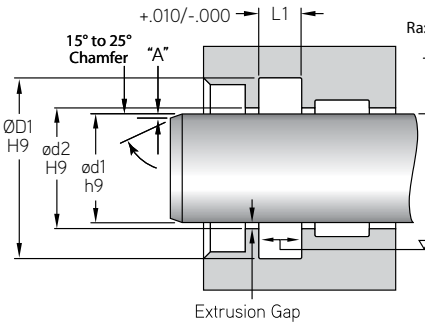

PISTON APPLICATION

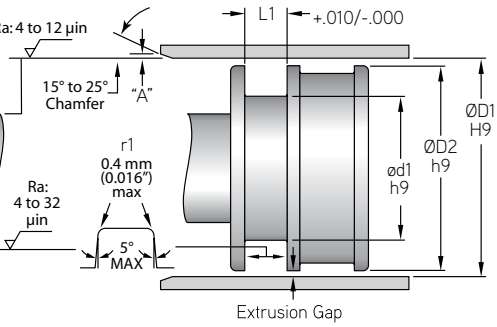

MFP PART NUMBER	NOMINAL SIZE ød1	NOMINAL SIZE ød2	NOMINAL SIZE ØD1	ACTUAL SIZE - ROD OR PISTON APPLICATION ød1	ød2	ØD1	ØD2	L2	L1
.250" - C/S				h9	H9	H9	h9		+.010/-.000
XP-250-02.500-500B	2-1/2	3	1/2	2.500	2.501	3.000	2.999	0.500	0.550
XP-250-02.500-750B	2-1/2	3	3/4	2.500	2.501	3.000	2.999	0.750	0.825
XP-250-02.625-250B	2-5/8	3-1/8	1/4	2.625	2.626	3.125	3.124	0.250	0.275
XP-250-02.625-375B	2-5/8	3-1/8	3/8	2.625	2.626	3.125	3.124	0.375	0.413
XP-250-02.750-250B	2-3/4	3-1/4	1/4	2.750	2.751	3.250	3.249	0.250	0.275
XP-250-02.750-375B	2-3/4	3-1/4	3/8	2.750	2.751	3.250	3.249	0.375	0.413
XP-250-02.750-500B	2-3/4	3-1/4	1/2	2.750	2.751	3.250	3.249	0.500	0.550
XP-250-02.750-750B	2-3/4	3-1/4	3/4	2.750	2.751	3.250	3.249	0.750	0.825
XP-250-02.875-250B	2-7/8	3-3/8	1/4	2.875	2.876	3.375	3.374	0.250	0.275
XP-250-02.875-375B	2-7/8	3-3/8	3/8	2.875	2.876	3.375	3.374	0.375	0.413
XP-250-03.000-250B	3	3-1/2	1/4	3.000	3.001	3.500	3.499	0.250	0.275
XP-250-03.000-375B	3	3-1/2	3/8	3.000	3.001	3.500	3.499	0.375	0.413
XP-250-03.000-500B	3	3-1/2	1/2	3.000	3.001	3.500	3.499	0.500	0.550
XP-250-03.125-250B	3-1/8	3-5/8	1/4	3.125	3.126	3.625	3.624	0.250	0.275
XP-250-03.125-375B	3-1/8	3-5/8	3/8	3.125	3.126	3.625	3.624	0.375	0.413
XP-250-03.250-250B	3-1/4	3-3/4	1/4	3.250	3.251	3.750	3.549	0.250	0.275
XP-250-03.250-375B	3-1/4	3-3/4	3/8	3.250	3.251	3.750	3.749	0.375	0.413
XP-250-03.250-500B	3-1/4	3-3/4	1/2	3.250	3.251	3.750	3.749	0.500	0.550
XP-250-03.375-250B	3-3/8	3-7/8	1/4	3.375	3.376	3.875	3.874	0.250	0.275
XP-250-03.375-375B	3-3/8	3-7/8	3/8	3.375	3.376	3.875	3.874	0.375	0.413
XP-250-03.500-250B	3-1/2	4	1/4	3.500	3.501	4.000	3.999	0.250	0.275
XP-250-03.500-312B	3-1/2	4	5/16	3.500	3.501	4.000	3.999	0.312	0.344
XP-250-03.500-375B	3-1/2	4	3/8	3.500	3.501	4.000	3.999	0.375	0.413
XP-250-03.500-500B	3-1/2	4	1/2	3.500	3.501	4.000	3.999	0.500	0.550
XP-250-03.500-562B	3-1/2	4	9/16	3.500	3.501	4.000	3.999	0.562	0.619
XP-250-03.500-625B	3-1/2	4	5/8	3.500	3.501	4.000	3.999	0.625	0.688
XP-250-03.625-375B	3-5/8	4-1/8	3/8	3.625	3.626	4.125	4.124	0.375	0.413
XP-250-03.750-250B	3-3/4	4-1/4	1/4	3.750	3.751	4.250	4.249	0.250	0.275
XP-250-03.750-375B	3-3/4	4-1/4	3/8	3.750	3.751	4.250	4.249	0.375	0.413
XP-250-03.750-500B	3-3/4	4-1/4	1/2	3.750	3.751	4.250	4.249	0.500	0.550
XP-250-03.750-562B	3-3/4	4-1/4	9/16	3.750	3.751	4.250	4.249	0.562	0.619
XP-250-03.875-375B	3-7/8	4-3/8	3/8	3.875	3.876	4.375	4.374	0.375	0.413
XP-250-04.000-250B	4	4-1/2	1/4	4.000	4.001	4.500	4.499	0.250	0.275
XP-250-04.000-312B	4	4-1/2	5/16	4.000	4.001	4.500	4.499	0.312	0.344
XP-250-04.000-375B	4	4-1/2	3/8	4.000	4.001	4.500	4.499	0.375	0.413

Compound information available on pages 20-37.

Surface Finish: ISO 4287 & Chamfer Information on pages 7-9.
For ISO tolerance charts, refer to pages 12-13.

MFPSEALS
www.mfpseals.com

X-PAC® Loaded B-Lip - Symmetrical U-Cup

A product of MFP Seals.

PROFILE

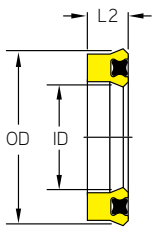

ROD APPLICATION

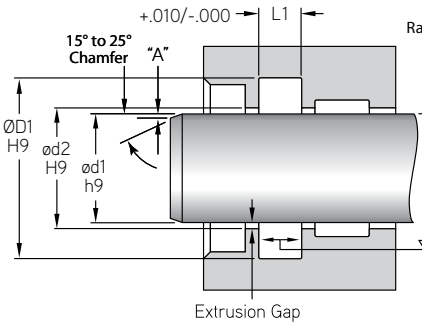

PISTON APPLICATION

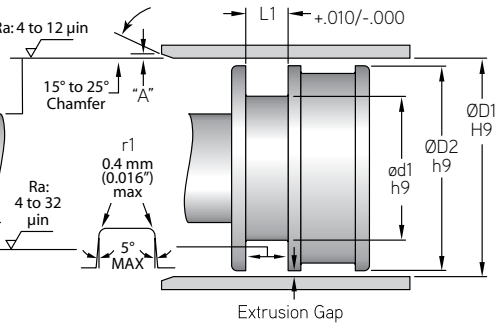

MFP PART NUMBER	NOMINAL SIZE ød1	NOMINAL SIZE ød2	NOMINAL SIZE ØD1	ACTUAL SIZE - ROD OR PISTON APPLICATION ød1	ød2	ØD1	ØD2	L2	L1
.250" - C/S				h9	H9	H9	h9		+.010/-.000
XP-250-04.000-500B	4	4-1/2	1/2	4.000	4.001	4.500	4.499	0.500	0.550
XP-250-04.000-562B	4	4-1/2	9/16	4.000	4.001	4.500	4.499	0.562	0.619
XP-250-04.125-375B	4-1/8	4-5/8	3/8	4.125	4.126	4.625	4.624	0.375	0.413
XP-250-04.125-562B	4-1/8	4-5/8	9/16	4.125	4.126	4.625	4.624	0.562	0.619
XP-250-04.250-250B	4-1/4	4-3/4	1/4	4.250	4.251	4.750	4.749	0.250	0.275
XP-250-04.250-375B	4-1/4	4-3/4	3/8	4.250	4.251	4.750	4.749	0.375	0.413
XP-250-04.250-562B	4-1/4	4-3/4	9/16	4.250	4.251	4.750	4.749	0.562	0.619
XP-250-04.375-250B	4-3/8	4-7/8	1/4	4.375	4.376	4.875	4.874	0.250	0.275
XP-250-04.375-562B	4-3/8	4-7/8	9/16	4.375	4.376	4.875	4.874	0.562	0.619
XP-250-04.500-250B	4-1/2	5	1/4	4.500	4.501	5.000	4.999	0.250	0.275
XP-250-04.500-312B	4-1/2	5	5/16	4.500	4.501	5.000	4.999	0.312	0.344
XP-250-04.500-375B	4-1/2	5	3/8	4.500	4.501	5.000	4.999	0.375	0.413
XP-250-04.500-500B	4-1/2	5	1/2	4.500	4.501	5.000	4.999	0.500	0.550
XP-250-04.500-562B	4-1/2	5	9/16	4.500	4.501	5.000	4.999	0.562	0.619
XP-250-04.500-625B	4-1/2	5	5/8	4.500	4.501	5.000	4.999	0.625	0.688
XP-250-04.625-250B	4-5/8	5-1/8	1/4	4.625	4.626	5.125	5.124	0.250	0.275
XP-250-04.625-500B	4-5/8	5-1/8	1/2	4.625	4.626	5.125	5.124	0.500	0.550
XP-250-04.625-562B	4-5/8	5-1/8	9/16	4.625	4.626	5.125	5.124	0.562	0.619
XP-250-04.750-250B	4-3/4	5-1/4	1/4	4.750	4.751	5.250	5.249	0.250	0.275
XP-250-04.750-375B	4-3/4	5-1/4	3/8	4.750	4.751	5.250	5.249	0.375	0.344
XP-250-04.750-562B	4-3/4	5-1/4	9/16	4.750	4.751	5.250	5.249	0.562	0.619
XP-250-04.875-562B	4-7/8	5-3/8	9/16	4.875	4.876	5.375	5.374	0.562	0.619
XP-250-04.875-625B	4-7/8	5-3/8	5/8	4.875	4.876	5.375	5.374	0.625	0.688
XP-250-05.000-250B	5	5-1/2	1/4	5.000	5.001	5.500	5.499	0.250	0.275
XP-250-05.000-375B	5	5-1/2	3/8	5.000	5.001	5.500	5.499	0.375	0.413
XP-250-05.000-500B	5	5-1/2	1/2	5.000	5.001	5.500	5.499	0.500	0.550
XP-250-05.000-562B	5	5-1/2	9/16	5.000	5.001	5.500	5.499	0.562	0.619
XP-250-05.000-625B	5	5-1/2	5/8	5.000	5.001	5.500	5.499	0.625	0.688
XP-250-05.250-250B	5-1/4	5-3/4	1/4	5.250	5.251	5.750	5.749	0.250	0.275
XP-250-05.250-375B	5-1/4	5-3/4	3/8	5.250	5.251	5.750	5.749	0.375	0.413
XP-250-05.250-562B	5-1/4	5-3/4	9/16	5.250	5.251	5.750	5.749	0.562	0.619
XP-250-05.375-250B	5-3/8	5-7/8	1/4	5.375	5.376	5.875	5.874	0.250	0.275
XP-250-05.375-375B	5-3/8	5-7/8	3/8	5.375	5.376	5.875	5.874	0.375	0.413
XP-250-05.375-437B	5-3/8	5-7/8	7/16	5.375	5.376	5.875	5.874	0.437	0.481
XP-250-05.375-562B	5-3/8	5-7/8	9/16	5.375	5.376	5.875	5.874	0.562	0.619

Surface Finish: ISO 4287 & Chamfer Information on pages 7-9.
For ISO tolerance charts, refer to pages 12-13.

Compound information available on pages 20-37.

X-PAC® Loaded B-Lip - Symmetrical U-Cup

A product of MFP Seals.

MFPSEALS®
www.mfpseals.com

PROFILE

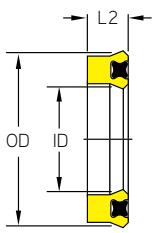

ROD APPLICATION

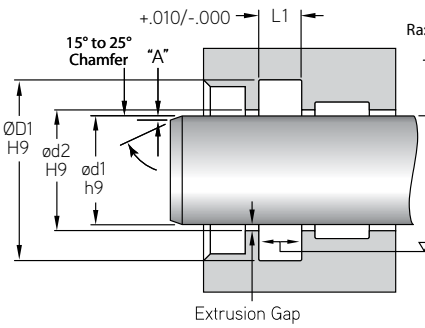

PISTON APPLICATION

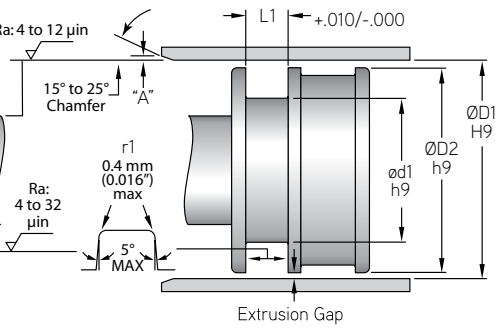

MFP PART NUMBER	NOMINAL SIZE ød1	NOMINAL SIZE ød2	NOMINAL SIZE ØD1	ACTUAL SIZE - ROD OR PISTON APPLICATION ød1	ød2	ØD1	ØD2	L2	L1
.250" - C/S				h9	H9	H9	h9		+.010/-.000
XP-250-05.500-250B	5-1/2	6	1/4	5.500	5.001	6.000	5.999	0.250	0.275
XP-250-05.500-375B	5-1/2	6	3/8	5.500	5.001	6.000	5.999	0.375	0.413
XP-250-05.500-562B	5-1/2	6	9/16	5.500	5.001	6.000	5.999	0.562	0.619
XP-250-05.500-625B	5-1/2	6	5/8	5.500	5.501	6.000	5.999	0.625	0.688
XP-250-05.625-562B	5-5/8	6-1/8	9/16	5.625	5.626	6.125	6.124	0.562	0.619
XP-250-05.750-375B	5-3/4	6-1/4	3/8	5.750	5.751	6.250	6.249	0.375	0.413
XP-250-05.750-562B	5-3/4	6-1/4	9/16	5.750	5.751	6.250	6.249	0.562	0.619
XP-250-05.875-562B	5-7/8	6-3/8	9/16	5.875	5.876	6.375	6.374	0.562	0.619
XP-250-06.000-375B	6	6-1/2	3/8	6.000	6.001	6.500	6.499	0.375	0.413
XP-250-06.000-437B	6	6-1/2	7/16	6.000	6.001	6.500	6.499	0.437	0.481
XP-250-06.000-500B	6	6-1/2	1/2	6.000	6.001	6.500	6.499	0.500	0.550
XP-250-06.000-562B	6	6-1/2	9/16	6.000	6.001	6.500	6.499	0.562	0.619
XP-250-06.125-375B	6-1/8	6-5/8	3/8	6.125	6.126	6.625	6.624	0.375	0.413
XP-250-06.250-375B	6-1/4	6-3/4	3/8	6.250	6.251	6.750	6.749	0.375	0.413
XP-250-06.250-562B	6-1/4	6-3/4	9/16	6.250	6.251	6.750	6.749	0.562	0.619
XP-250-06.500-250B	6-1/2	7	1/4	6.500	6.501	7.000	6.999	0.250	0.275
XP-250-06.500-375B	6-1/2	7	3/8	6.500	6.501	7.000	6.999	0.375	0.413
XP-250-06.500-562B	6-1/2	7	9/16	6.500	6.501	7.000	6.999	0.562	0.619
XP-250-06.750-375B	6-3/4	7-1/4	3/8	6.750	6.751	7.250	7.249	0.375	0.413
XP-250-06.750-562B	6-3/4	7-1/4	9/16	6.750	6.751	7.250	7.249	0.562	0.619
XP-250-07.000-375B	7	7-1/2	3/8	7.000	7.001	7.500	7.490	0.375	0.413
XP-250-07.000-562B	7	7-1/2	9/16	7.000	7.001	7.500	7.490	0.562	0.619
XP-250-07.125-562B	7-1/8	7-5/8	9/16	7.125	7.126	7.625	7.624	0.562	0.619
XP-250-07.250-562B	7-1/4	7-3/4	9/16	7.250	7.251	7.750	7.749	0.562	0.619
XP-250-07.500-250B	7-1/2	8	1/4	7.500	7.501	8.000	7.999	0.250	0.275
XP-250-07.500-375B	7-1/2	8	3/8	7.500	7.501	8.000	7.999	0.375	0.413
XP-250-07.500-562B	7-1/2	8	9/16	7.500	7.501	8.000	7.999	0.562	0.619
XP-250-07.750-375B	7-3/4	8-1/4	3/8	7.750	7.751	8.250	8.249	0.375	0.413
XP-250-07.750-562B	7-3/4	8-1/4	9/16	7.750	7.751	8.250	8.249	0.562	0.619
XP-250-07.937-375B	7-15/16	8-7/16	3/8	7.937	7.938	8.473	8.472	0.375	0.413
XP-250-08.000-250B	8	8-1/2	1/4	8.000	8.001	8.500	8.499	0.250	0.275
XP-250-08.000-375B	8	8-1/2	3/8	8.000	8.001	8.500	8.499	0.375	0.413
XP-250-08.000-562B	8	8-1/2	9/16	8.000	8.001	8.500	8.499	0.562	0.619
XP-250-08.125-562B	8-1/8	8-5/8	9/16	8.125	8.126	8.625	8.624	0.562	0.619
XP-250-08.250-375B	8-1/4	8-3/4	3/8	8.250	8.251	8.750	8.749	0.375	0.413

Compound information available on pages 20-37.

Surface Finish: ISO 4287 & Chamfer Information on pages 7-9.
For ISO tolerance charts, refer to pages 12-13.

MFPSEALS
www.mfpseals.com

X-PAC® Loaded B-Lip - Symmetrical U-Cup

A product of MFP Seals.

PROFILE

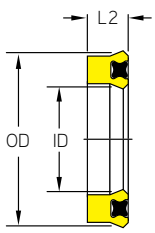

ROD APPLICATION

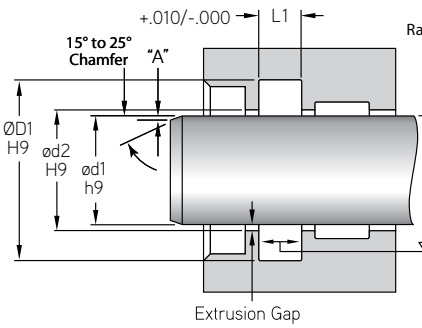

PISTON APPLICATION

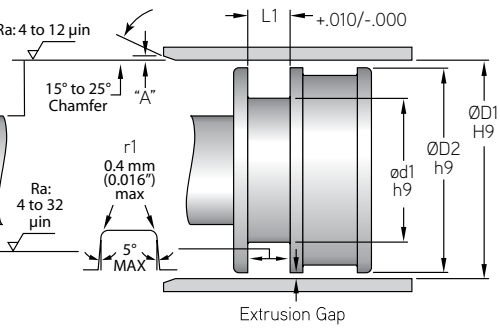

MFP PART NUMBER	NOMINAL SIZE ød1	NOMINAL SIZE ød2	NOMINAL SIZE ØD1	ACTUAL SIZE - ROD OR PISTON APPLICATION ød1	ød2	ØD1	ØD2	L2	L1
.250" - C/S				h9	H9	H9	h9		+.010/-.000
XP-250-08.250-562B	8-1/4	8-3/4	9/16	8.250	8.251	8.750	8.749	0.562	0.619
XP-250-08.375-562B	8-3/8	8-7/8	9/16	8.375	8.376	8.875	8.874	0.562	0.619
XP-250-08.500-375B	8-1/2	9	3/8	8.500	8.501	9.000	8.999	0.375	0.413
XP-250-08.500-562B	8-1/2	9	9/16	8.500	8.501	9.000	8.999	0.562	0.619
XP-250-08.750-375B	8-3/4	9-1/4	3/8	8.750	8.751	9.250	9.249	0.375	0.413
XP-250-09.000-375B	9	9-1/2	3/8	9.000	9.001	9.500	9.499	0.375	0.413
XP-250-09.000-562B	9	9-1/2	9/16	9.000	9.001	9.500	9.499	0.562	0.619
XP-250-09.500-562B	9-1/2	10	9/16	9.500	9.501	10.000	9.999	0.562	0.619
XP-250-09.625-375B	9-5/8	10-1/8	3/8	9.625	9.626	10.125	10.124	0.375	0.413
XP-250-09.750-562B	9-3/4	10-1/4	9/16	9.750	9.751	10.250	10.249	0.562	0.619
XP-250-10.000-562B	10	10-1/2	9/16	10.000	10.001	10.500	10.499	0.562	0.619
XP-250-10.500-250B	10-1/2	11	1/4	10.500	10.501	11.000	10.999	0.250	0.275
XP-250-11.500-531B	11-1/2	12	17/32	11.500	11.501	12.000	11.999	0.531	0.584
XP-250-12.000-562B	12	12-1/2	9/16	12.000	12.001	12.500	12.499	0.562	0.619
XP-250-12.500-531B	12-1/2	13	17/32	12.500	12.501	13.000	12.999	0.531	0.584
XP-250-12.750-562B	12-3/4	13-1/4	9/16	12.750	12.751	13.250	13.249	0.562	0.619
XP-250-13.500-531B	13-1/2	14	17/32	13.500	13.501	14.000	13.999	0.531	0.584
XP-250-13.500-562B	13-1/2	14	9/16	13.500	13.501	14.000	13.999	0.562	0.619
.281" - C/S				h9	H9	H9	h9		+.010/-.000
XP-281-02.437-375B	2-7/16	3	3/8	2.437	2.438	3.000	2.999	0.375	0.413
XP-281-03.187-500B	3-3/16	3-1/2	1/2	3.187	3.188	3.750	3.749	0.500	0.550
XP-281-05.000-281B	5	5-9/16	9/32	5.000	5.001	5.562	5.561	0.281	0.309
XP-281-05.437-562B	5-7/16	6	9/16	5.437	5.438	6.000	5.999	0.562	0.619
.312" - C/S				h9	H9	H9	h9		+.010/-.000
XP-312-00.750-500B	3/4	1-3/8	1/2	0.750	0.752	1.375	1.373	0.500	0.550
XP-312-00.875-562B	7/8	1-1/2	9/16	0.875	0.877	1.500	1.498	0.562	0.619
XP-312-00.937-375B	15/16	1-9/16	3/8	0.937	0.939	1.562	1.560	0.375	0.413
XP-312-01.000-375B	1	1-5/8	3/8	1.000	1.002	1.625	1.623	0.375	0.413
XP-312-01.000-500B	1	1-5/8	1/2	1.000	1.002	1.625	1.623	0.500	0.550
XP-312-01.125-312B	1-1/8	1-3/4	5/16	1.125	1.127	1.750	1.748	0.312	0.344
XP-312-01.125-375B	1-1/8	1-3/4	3/8	1.125	1.127	1.750	1.748	0.375	0.413
XP-312-01.125-500B	1-1/8	1-3/4	1/2	1.125	1.127	1.750	1.748	0.500	0.550
XP-312-01.250-312B	1-1/4	1-7/8	5/16	1.250	1.252	1.875	1.873	0.312	0.344
XP-312-01.250-375B	1-1/4	1-7/8	3/8	1.250	1.252	1.875	1.873	0.375	0.413
XP-312-01.250-500B	1-1/4	1-7/8	1/2	1.250	1.252	1.875	1.873	0.500	0.550

Surface Finish: ISO 4287 & Chamfer Information on pages 7-9.
For ISO tolerance charts, refer to pages 12-13.

Compound information available on pages 20-37.

X-PAC® Loaded B-Lip - Symmetrical U-Cup

A product of MFP Seals.

MFPSEALS®
www.mfpseals.com

PROFILE

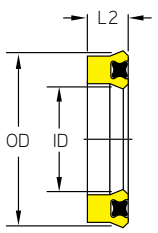

ROD APPLICATION

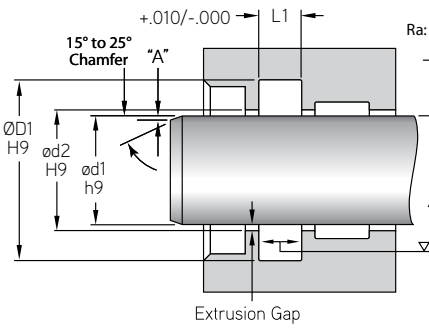

PISTON APPLICATION

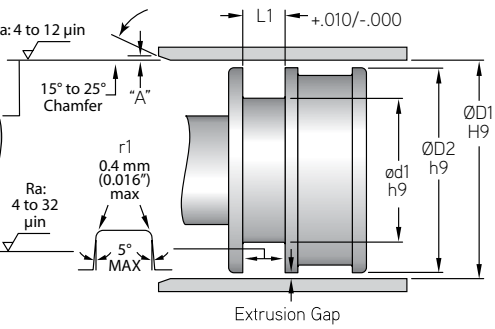

MFP PART NUMBER	NOMINAL SIZE ød1	NOMINAL SIZE ød2	NOMINAL SIZE ØD1	ACTUAL SIZE - ROD OR PISTON APPLICATION ød1	ød2	ØD1	ØD2	L2	L1
.312" - C/S				h9	H9	H9	h9		+.010/-.000
XP-312-01.250-562B	1-1/4	1-7/8	9/16	1.250	1.252	1.875	1.873	0.562	0.619
XP-312-01.375-312B	1-3/8	2	5/16	1.375	1.377	2.000	1.998	0.312	0.344
XP-312-01.375-375B	1-3/8	2	3/8	1.375	1.377	2.000	1.998	0.375	0.413
XP-312-01.375-500B	1-3/8	2	1/2	1.375	1.377	2.000	1.998	0.500	0.550
XP-312-01.375-562B	1-3/8	2	9/16	1.375	1.377	2.000	1.998	0.562	0.619
XP-312-01.500-375B	1-1/2	2-1/8	3/8	1.500	1.502	2.125	2.123	0.375	0.413
XP-312-01.500-437B	1-1/2	2-1/8	7/16	1.500	1.502	2.125	2.123	0.437	0.483
XP-312-01.500-500B	1-1/2	2-1/8	1/2	1.500	1.502	2.125	2.123	0.500	0.550
XP-312-01.625-375B	1-5/8	2-1/4	3/8	1.625	1.627	2.250	2.248	0.375	0.413
XP-312-01.625-500B	1-5/8	2-1/4	1/2	1.625	1.627	2.250	2.248	0.500	0.550
XP-312-01.687-500B	1-11/16	2-5/16	1/2	1.687	1.689	2.312	2.310	0.500	0.550
XP-312-01.750-312B	1-3/4	2-3/8	5/16	1.750	1.752	2.375	2.373	0.312	0.344
XP-312-01.750-375B	1-3/4	2-3/8	3/8	1.750	1.752	2.375	2.373	0.375	0.413
XP-312-01.750-500B	1-3/4	2-3/8	1/2	1.750	1.752	2.375	2.373	0.500	0.550
XP-312-01.875-375B	1-7/8	2-1/2	3/8	1.875	1.877	2.500	2.498	0.375	0.413
XP-312-01.875-500B	1-7/8	2-1/2	1/2	1.875	1.877	2.500	2.498	0.500	0.550
XP-312-01.875-562B	1-7/8	2-1/2	9/16	1.875	1.877	2.500	2.498	0.562	0.619
XP-312-02.000-312B	2	2-5/8	5/16	2.000	2.002	2.625	2.623	0.312	0.344
XP-312-02.000-375B	2	2-5/8	3/8	2.000	2.002	2.625	2.623	0.375	0.413
XP-312-02.000-437B	2	2-5/8	7/16	2.000	2.002	2.625	2.623	0.437	0.483
XP-312-02.000-500B	2	2-5/8	1/2	2.000	2.002	2.625	2.623	0.500	0.550
XP-312-02.000-562B	2	2-5/8	9/16	2.000	2.002	2.625	2.623	0.562	0.619
XP-312-02.125-312B	2-1/8	2-3/4	5/16	2.125	2.127	2.750	2.748	0.312	0.344
XP-312-02.125-375B	2-1/8	2-3/4	3/8	2.125	2.127	2.750	2.748	0.375	0.413
XP-312-02.125-500B	2-1/8	2-3/4	1/2	2.125	2.127	2.750	2.748	0.500	0.550
XP-312-02.250-375B	2-1/4	2-7/8	3/8	2.250	2.252	2.875	2.873	0.375	0.413
XP-312-02.250-500B	2-1/4	2-7/8	1/2	2.250	2.252	2.875	2.873	0.500	0.550
XP-312-02.375-312B	2-3/8	3	5/16	2.375	2.377	3.000	2.998	0.312	0.344
XP-312-02.375-375B	2-3/8	3	3/8	2.375	2.377	3.000	2.998	0.375	0.413
XP-312-02.375-500B	2-3/8	3	1/2	2.375	2.377	3.000	2.998	0.500	0.550
XP-312-02.500-375B	2-1/2	3-1/8	3/8	2.500	2.502	3.125	3.123	0.375	0.413
XP-312-02.500-500B	2-1/2	3-1/8	1/2	2.500	2.502	3.125	3.123	0.500	0.550
XP-312-02.625-500B	2-5/8	3-1/4	1/2	2.625	2.627	3.250	3.248	0.500	0.550
XP-312-02.625-625B	2-5/8	3-1/4	5/8	2.625	2.627	3.250	3.248	0.625	0.688
XP-312-02.750-375B	2-3/4	3-3/8	3/8	2.750	2.752	3.375	3.373	0.375	0.413

Compound information available on pages 20-37.

Surface Finish: ISO 4287 & Chamfer Information on pages 7-9.
For ISO tolerance charts, refer to pages 12-13.

MFPSEALS®
www.mfpseals.com

X-PAC® Loaded B-Lip - Symmetrical U-Cup

A product of MFP Seals.

PROFILE

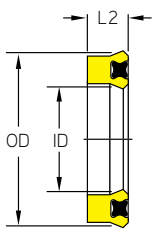

ROD APPLICATION

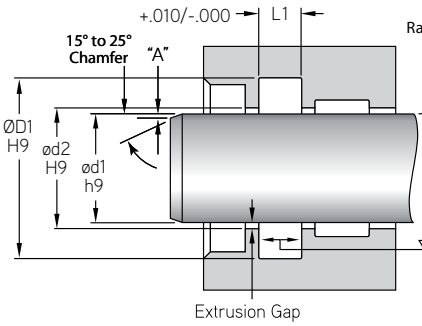

PISTON APPLICATION

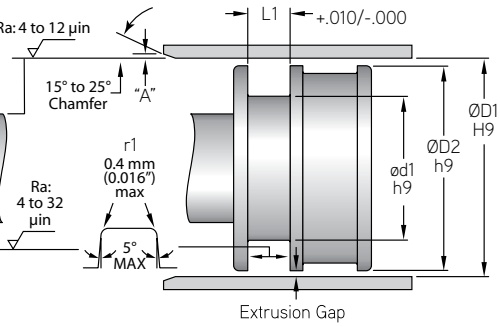

MFP PART NUMBER	NOMINAL SIZE ød1	NOMINAL SIZE ød2	NOMINAL SIZE ØD1	ACTUAL SIZE - ROD OR PISTON APPLICATION ød1	ød2	ØD1	ØD2	L2	L1
.312" - C/S				h9	H9	H9	h9		+.010/-.000
XP-312-02.750-500B	2-3/4	3-3/8	1/2	2.750	2.752	3.375	3.373	0.500	0.550
XP-312-02.750-625B	2-3/4	3-3/8	5/8	2.750	2.752	3.375	3.373	0.625	0.688
XP-312-02.875-312B	2-7/8	3-1/2	5/16	2.875	2.877	3.500	3.498	0.312	0.344
XP-312-02.875-375B	2-7/8	3-1/2	3/8	2.875	2.877	3.500	3.498	0.375	0.413
XP-312-02.875-500B	2-7/8	3-1/2	1/2	2.875	2.877	3.500	3.498	0.500	0.550
XP-312-02.875-562B	2-7/8	3-1/2	9/16	2.875	2.877	3.500	3.498	0.562	0.619
XP-312-03.000-312B	3	3-5/8	5/16	3.000	3.002	3.625	3.623	0.312	0.344
XP-312-03.000-375B	3	3-5/8	3/8	3.000	3.002	3.625	3.623	0.375	0.413
XP-312-03.000-500B	3	3-5/8	1/2	3.000	3.002	3.625	3.623	0.500	0.550
XP-312-03.125-312B	3-1/8	3-3/4	5/16	3.125	3.127	3.750	3.748	0.312	0.344
XP-312-03.125-500B	3-1/8	3-3/4	1/2	3.125	3.127	3.750	3.748	0.500	0.550
XP-312-03.250-500B	3-1/4	3-7/8	1/2	3.250	3.252	3.875	3.873	0.500	0.550
XP-312-03.375-500B	3-3/8	4	1/2	3.375	3.377	4.000	3.998	0.500	0.550
XP-312-03.375-562B	3-3/8	4	9/16	3.375	3.377	4.000	3.998	0.562	0.619
XP-312-03.375-625B	3-3/8	4	5/8	3.375	3.377	4.000	3.998	0.625	0.688
XP-312-03.500-500B	3-1/2	4-1/8	1/2	3.500	3.502	4.125	4.123	0.500	0.550
XP-312-03.625-375B	3-5/8	4-1/4	3/8	3.625	3.627	4.250	4.248	0.375	0.413
XP-312-03.625-500B	3-5/8	4-1/4	1/2	3.625	3.627	4.250	4.248	0.500	0.550
XP-312-03.750-312B	3-3/4	4-3/8	5/16	3.750	3.752	4.375	4.373	0.312	0.344
XP-312-03.750-375B	3-3/4	4-3/8	3/8	3.750	3.752	4.375	4.373	0.375	0.413
XP-312-03.750-500B	3-3/4	4-3/8	1/2	3.750	3.752	4.375	4.373	0.500	0.550
XP-312-03.750-625B	3-3/4	4-3/8	5/8	3.750	3.752	4.375	4.373	0.625	0.688
XP-312-03.875-500B	3-7/8	4-1/2	1/2	3.875	3.877	4.500	4.498	0.500	0.550
XP-312-04.000-375B	4	4-5/8	3/8	4.000	4.002	4.625	4.623	0.375	0.413
XP-312-04.000-562B	4	4-5/8	9/16	4.000	4.002	4.625	4.623	0.562	0.619
XP-312-04.125-500B	4-1/8	4-3/4	1/2	4.125	4.127	4.750	4.748	0.500	0.550
XP-312-04.125-562B	4-1/8	4-3/4	9/16	4.125	4.127	4.750	4.748	0.562	0.619
XP-312-04.250-437B	4-1/4	4-7/8	7/16	4.250	4.252	4.875	4.873	0.437	0.483
XP-312-04.250-562B	4-1/4	4-7/8	9/16	4.250	4.252	4.875	4.873	0.562	0.619
XP-312-04.375-312B	4-3/8	5	5/16	4.375	4.377	5.000	4.998	0.312	0.344
XP-312-04.375-375B	4-3/8	5	3/8	4.375	4.377	5.000	4.998	0.375	0.413
XP-312-04.375-500B	4-3/8	5	1/2	4.375	4.377	5.000	4.998	0.500	0.550
XP-312-04.375-562B	4-3/8	5	9/16	4.375	4.377	5.000	4.998	0.562	0.619
XP-312-04.500-500B	4-1/2	5-1/8	1/2	4.500	4.502	5.125	5.123	0.500	0.550
XP-312-04.500-625B	4-1/2	5-1/8	5/8	4.500	4.502	5.125	5.123	0.625	0.688

Surface Finish: ISO 4287 & Chamfer Information on pages 7-9.
For ISO tolerance charts, refer to pages 12-13.

Compound information available on pages 20-37.

X-PAC® Loaded B-Lip - Symmetrical U-Cup

A product of MFP Seals.

MFPSEALS®
www.mfpseals.com

PROFILE

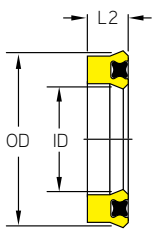

ROD APPLICATION

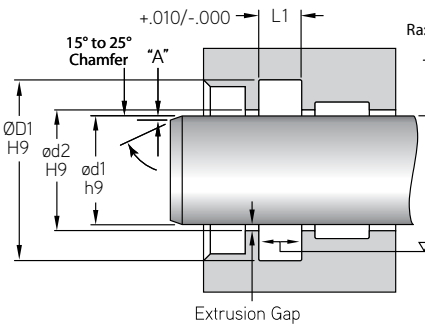

PISTON APPLICATION

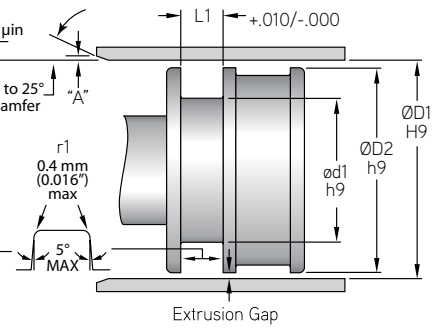

MFP PART NUMBER	NOMINAL SIZE ød1	NOMINAL SIZE ød2	NOMINAL SIZE ØD1	ACTUAL SIZE - ROD OR PISTON APPLICATION ød1	ød2	ØD1	ØD2	L2	L1
.312" - C/S				h9	H9	H9	h9		+.010/-.000
XP-312-04.625-625B	4-5/8	5-1/4	5/8	4.625	4.627	5.250	5.248	0.625	0.688
XP-312-04.750-500B	4-3/4	5-3/8	1/2	4.750	4.752	5.375	5.373	0.500	0.550
XP-312-04.750-625B	4-3/4	5-3/8	5/8	4.750	4.752	5.375	5.373	0.625	0.688
XP-312-05.000-375B	5	5-5/8	3/8	5.000	5.002	5.625	5.623	0.375	0.413
XP-312-05.000-625B	5	5-5/8	5/8	5.000	5.002	5.625	5.623	0.625	0.688
XP-312-05.250-625B	5-1/4	5-7/8	5/8	5.250	5.252	5.875	5.873	0.625	0.688
XP-312-05.375-312B	5-3/8	6	5/16	5.375	5.377	6.000	5.998	0.312	0.344
XP-312-05.375-375B	5-3/8	6	3/8	5.375	5.377	6.000	5.998	0.375	0.413
XP-312-05.375-625B	5-3/8	6	5/8	5.375	5.377	6.000	5.998	0.625	0.688
XP-312-05.500-312B	5-1/2	6-1/8	5/16	5.500	5.502	6.125	6.123	0.312	0.344
XP-312-05.500-375B	5-1/2	6-1/8	3/8	5.500	5.502	6.125	6.123	0.375	0.413
XP-312-05.500-500B	5-1/2	6-1/8	1/2	5.500	5.502	6.125	6.123	0.500	0.550
XP-312-05.500-625B	5-1/2	6-1/8	5/8	5.500	5.502	6.125	6.123	0.625	0.688
XP-312-05.750-625B	5-3/4	6-3/8	5/8	5.750	5.752	6.375	6.373	0.625	0.688
XP-312-05.875-375B	5-7/8	6-1/2	3/8	5.875	5.877	6.500	6.498	0.375	0.413
XP-312-06.000-625B	6	6-5/8	5/8	6.000	6.002	6.625	6.623	0.625	0.688
XP-312-06.375-312B	6-3/8	7	5/16	6.375	6.377	7.000	6.998	0.312	0.344
XP-312-06.375-625B	6-3/8	7	5/8	6.375	6.377	7.000	6.998	0.625	0.688
XP-312-06.500-625B	6-1/2	7-1/8	5/8	6.500	6.502	7.125	7.123	0.625	0.688
XP-312-06.625-625B	6-5/8	7-1/4	5/8	6.625	6.627	7.250	7.248	0.625	0.688
XP-312-07.000-625B	7	7-5/8	5/8	7.000	7.002	7.625	7.623	0.625	0.688
XP-312-07.250-625B	7-1/4	7-7/8	5/8	7.250	7.252	7.875	7.873	0.625	0.688
XP-312-07.375-312B	7-3/8	8	5/16	7.375	7.377	8.000	7.998	0.312	0.344
XP-312-07.375-625B	7-3/8	8	5/8	7.375	7.377	8.000	7.998	0.625	0.688
XP-312-08.000-625B	8	8-5/8	5/8	8.000	8.002	8.625	8.623	0.625	0.688
XP-312-09.250-625B	9-1/4	9-7/8	5/8	9.250	9.252	9.875	9.873	0.625	0.688
XP-312-10.750-375B	10-3/4	11-3/8	3/8	10.750	10.752	11.375	11.373	0.375	0.413
.375" - C/S				h9	H9	H9	h9		+.010/-.000
XP-375-00.812-375B	13/16	1-9/16	3/8	0.812	0.815	1.562	1.560	0.375	0.413
XP-375-01.125-625B	1-1/8	1-7/8	5/8	1.125	1.127	1.875	1.873	0.625	0.688
XP-375-01.250-375B	1 1/4	2	3/8	1.250	1.252	2.000	1.998	0.375	0.413
XP-375-01.250-500B	1 1/4	2	1/2	1.250	1.252	2.000	1.998	0.500	0.550
XP-375-01.250-625B	1-1/4	2	5/8	1.250	1.252	2.000	1.998	0.625	0.688
XP-375-01.500-375B	1-1/2	2-3/4	3/8	1.500	1.502	2.250	2.248	0.375	0.413
XP-375-01.500-500B	1-1/2	2-1/4	1/2	1.500	1.502	2.250	2.248	0.500	0.550

Compound information available on pages 20-37.

Surface Finish: ISO 4287 & Chamfer Information on pages 7-9.
For ISO tolerance charts, refer to pages 12-13.

MFPSEALS®
www.mfpseals.com

X-PAC® Loaded B-Lip - Symmetrical U-Cup

A product of MFP Seals.

PROFILE

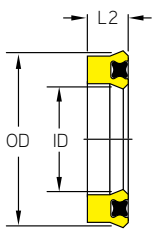

ROD APPLICATION

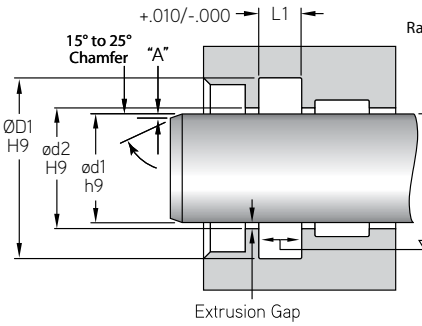

PISTON APPLICATION

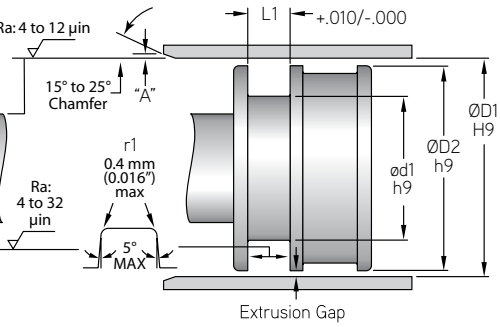

MFP PART NUMBER	NOMINAL SIZE ød1	NOMINAL SIZE ød2	NOMINAL SIZE ØD1	ACTUAL SIZE - ROD OR PISTON APPLICATION ød1	ød2	ØD1	ØD2	L2	L1
.375" - C/S				h9	H9	H9	h9		+.010/-.000
XP-375-01.500-625B	1-1/2	2-1/4	5/8	1.500	1.502	2.250	2.248	0.625	0.688
XP-375-01.625-375B	1-5/8	2-3/8	3/8	1.625	1.627	2.375	2.373	0.375	0.413
XP-375-01.625-625B	1-5/8	2-3/8	5/8	1.625	1.627	2.375	2.373	0.625	0.688
XP-375-01.750-375B	1-3/4	2-1/2	3/8	1.750	1.752	2.500	2.498	0.375	0.413
XP-375-01.750-500B	1-3/4	2-1/2	1/2	1.750	1.752	2.500	2.498	0.500	0.550
XP-375-01.750-625B	1-3/4	2-1/2	5/8	1.750	1.752	2.500	2.498	0.625	0.688
XP-375-02.000-375B	2	2-3/4	3/8	2.000	2.002	2.750	2.748	0.375	0.413
XP-375-02.000-437B	2	2-3/4	7/16	2.000	2.002	2.750	2.748	0.437	0.483
XP-375-02.000-500B	2	2-3/4	1/2	2.000	2.002	2.750	2.748	0.500	0.550
XP-375-02.000-625B	2	2-3/4	5/8	2.000	2.002	2.750	2.748	0.625	0.688
XP-375-02.125-625B	2-1/8	2-7/8	5/8	2.125	2.127	2.875	2.873	0.625	0.688
XP-375-02.187-625B	2-3/16	2-15/16	5/8	2.187	2.189	2.937	2.935	0.625	0.688
XP-375-02.250-375B	2-1/4	3	3/8	2.250	2.252	3.000	2.998	0.375	0.413
XP-375-02.250-500B	2-1/4	3	1/2	2.250	2.252	3.000	2.998	0.500	0.550
XP-375-02.250-625B	2-1/4	3	5/8	2.250	2.252	3.000	2.998	0.625	0.688
XP-375-02.375-375B	2-3/8	3-1/8	3/8	2.375	2.377	3.125	3.123	0.375	0.413
XP-375-02.375-500B	2-3/8	3-1/8	1/2	2.375	2.377	3.125	3.123	0.500	0.550
XP-375-02.375-625B	2-3/8	3-1/8	5/8	2.375	2.377	3.125	3.123	0.625	0.688
XP-375-02.500-375B	2-1/2	3-3/4	3/8	2.500	2.502	3.250	3.248	0.375	0.413
XP-375-02.500-500B	2-1/2	3-1/4	1/2	2.500	2.502	3.250	3.248	0.500	0.550
XP-375-02.500-625B	2-1/2	3-1/4	5/8	2.500	2.502	3.250	3.248	0.625	0.688
XP-375-02.625-562B	2-5/8	3-3/8	9/16	2.625	2.627	3.375	3.373	0.562	0.619
XP-375-02.625-625B	2-5/8	3-3/8	5/8	2.625	2.627	3.375	3.373	0.625	0.688
XP-375-02.750-375B	2-3/4	3-1/2	3/8	2.750	2.752	3.500	3.498	0.375	0.413
XP-375-02.750-480B	2-3/4	3-1/2	0.480	2.750	2.752	3.500	3.498	0.480	0.528
XP-375-02.750-500B	2-3/4	3-1/2	1/2	2.750	2.752	3.500	3.498	0.500	0.550
XP-375-02.750-625B	2-3/4	3-1/2	5/8	2.750	2.752	3.500	3.498	0.625	0.688
XP-375-02.875-500B	2-7/8	3-5/8	1/2	2.875	2.877	3.625	3.623	0.500	0.550
XP-375-02.875-625B	2-7/8	3-5/8	5/8	2.875	2.877	3.625	3.623	0.625	0.688
XP-375-03.000-375B	3	3-3/4	3/8	3.000	3.002	3.750	3.748	0.375	0.413
XP-375-03.000-500B	3	3-3/4	1/2	3.000	3.002	3.750	3.748	0.500	0.550
XP-375-03.000-625B	3	3-3/4	5/8	3.000	3.002	3.750	3.748	0.625	0.688
XP-375-03.125-375B	3-1/8	3-7/8	3/8	3.125	3.127	3.875	3.873	0.375	0.413
XP-375-03.125-625B	3-1/8	3-7/8	5/8	3.125	3.127	3.875	3.873	0.625	0.688
XP-375-03.250-440B	3-1/4	4	0.440	3.250	3.252	4.000	3.998	0.440	0.484

Surface Finish: ISO 4287 & Chamfer Information on pages 7-9.
For ISO tolerance charts, refer to pages 12-13.

Compound information available on pages 20-37.

X-PAC® Loaded B-Lip - Symmetrical U-Cup

A product of MFP Seals.

MFPSEALS®
www.mfpseals.com

PROFILE

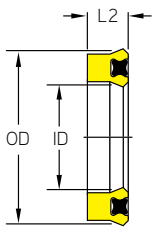

ROD APPLICATION

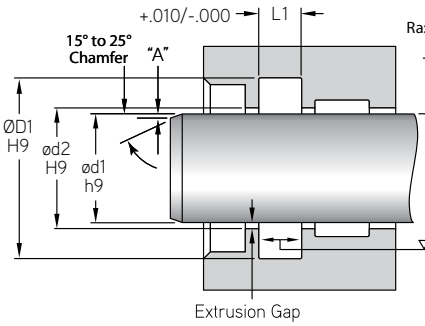

PISTON APPLICATION

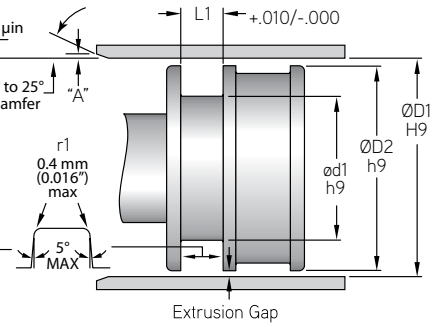

MFP PART NUMBER	NOMINAL SIZE ød1	NOMINAL SIZE ød2	NOMINAL SIZE ØD1	ACTUAL SIZE - ROD OR PISTON APPLICATION ød1	ød2	ØD1	ØD2	L2	L1
.375" - C/S				h9	H9	H9	h9		+.010/-.000
XP-375-03.250-500B	3-1/4	4	1/2	3.250	3.252	4.000	3.998	0.500	0.550
XP-375-03.250-562B	3-1/4	4	9/16	3.250	3.252	4.000	3.998	0.562	0.619
XP-375-03.250-625B	3-1/4	4	5/8	3.250	3.252	4.000	3.998	0.625	0.688
XP-375-03.375-625B	3-3/8	4-1/8	5/8	3.375	3.377	4.125	4.123	0.625	0.688
XP-375-03.500-500B	3-1/2	4-1/8	1/2	3.500	3.502	4.250	4.248	0.500	0.550
XP-375-03.500-625B	3-1/2	4-1/4	5/8	3.500	3.502	4.250	4.248	0.625	0.688
XP-375-03.625-500B	3-5/8	4-3/8	1/2	3.625	3.627	4.375	4.373	0.500	0.550
XP-375-03.625-562B	3-5/8	4-3/8	9/16	3.625	3.627	4.375	4.373	0.562	0.619
XP-375-03.625-625B	3-5/8	4-3/8	5/8	3.625	3.627	4.375	4.373	0.625	0.688
XP-375-03.750-375B	3-3/4	4-1/2	3/8	3.750	3.752	4.500	4.498	0.375	0.413
XP-375-03.750-460B	3-3/4	4-1/2	0.460	3.750	3.752	4.500	4.498	0.460	0.506
XP-375-03.750-480B	3-3/4	4-1/2	0.480	3.750	3.752	4.500	4.498	0.480	0.528
XP-375-03.750-500B	3-3/4	4-1/2	1/2	3.750	3.752	4.500	4.498	0.500	0.550
XP-375-03.750-625B	3-3/4	4-1/2	5/8	3.750	3.752	4.500	4.498	0.625	0.688
XP-375-03.875-625B	3-7/8	4-5/8	5/8	3.875	3.877	4.625	4.623	0.625	0.688
XP-375-04.000-500B	4	4-3/4	1/2	4.000	4.002	4.750	4.748	0.500	0.550
XP-375-04.000-625B	4	4-3/4	5/8	4.000	4.002	4.750	4.748	0.625	0.688
XP-375-04.125-625B	4-1/8	4-7/8	5/8	4.125	4.127	4.875	4.873	0.625	0.688
XP-375-04.250-375B	4-1/4	5	3/8	4.250	4.252	5.000	4.998	0.375	0.413
XP-375-04.250-500B	4-1/4	5	1/2	4.250	4.252	5.000	4.998	0.500	0.550
XP-375-04.250-625B	4-1/4	5	5/8	4.250	4.252	5.000	4.998	0.625	0.688
XP-375-04.375-500B	4-3/8	5-1/8	1/2	4.375	4.377	5.125	5.123	0.500	0.550
XP-375-04.375-625B	4-3/8	5-1/8	5/8	4.375	4.377	5.125	5.123	0.625	0.688
XP-375-04.500-375B	4-1/2	5-1/4	3/8	4.500	4.502	5.250	5.248	0.375	0.413
XP-375-04.500-500B	4-1/2	5-1/4	1/2	4.500	4.502	5.250	5.248	0.500	0.550
XP-375-04.500-625B	4-1/2	5-1/4	5/8	4.500	4.502	5.250	5.248	0.625	0.688
XP-375-04.625-625B	4-5/8	5-3/8	5/8	4.625	4.627	5.375	5.373	0.625	0.688
XP-375-04.750-375B	4-3/4	5-1/2	3/8	4.750	4.752	5.500	5.498	0.375	0.413
XP-375-04.750-500B	4-3/4	5-1/2	1/2	4.750	4.752	5.500	5.498	0.500	0.550
XP-375-04.750-625B	4-3/4	5-1/2	5/8	4.750	4.752	5.500	5.498	0.625	0.688
XP-375-04.875-375B	4-7/8	5-5/8	3/8	4.875	4.877	5.625	5.623	0.375	0.413
XP-375-04.875-625B	4-7/8	5-5/8	5/8	4.875	4.877	5.625	5.623	0.625	0.688
XP-375-05.000-375B	5	5-3/4	3/8	5.000	5.002	5.750	5.748	0.375	0.413
XP-375-05.000-500B	5	5-3/4	1/2	5.000	5.002	5.750	5.748	0.500	0.550
XP-375-05.000-625B	5	5-3/4	5/8	5.000	5.002	5.750	5.748	0.625	0.688

Compound information available on pages 20-37.

Surface Finish: ISO 4287 & Chamfer Information on pages 7-9.
For ISO tolerance charts, refer to pages 12-13.

MFPSEALS
www.mfpseals.com

X-PAC® Loaded B-Lip - Symmetrical U-Cup

A product of MFP Seals.

PROFILE

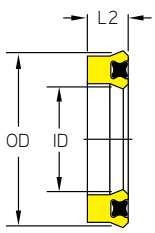

ROD APPLICATION

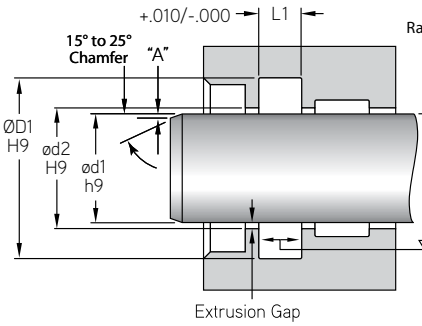

PISTON APPLICATION

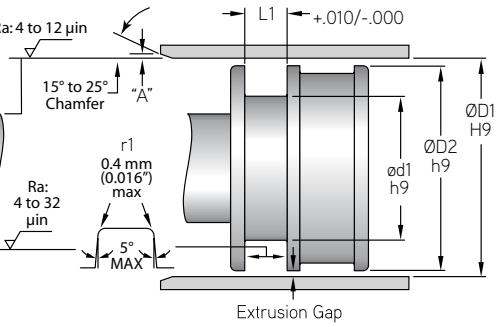

MFP PART NUMBER	NOMINAL SIZE ød1	NOMINAL SIZE ød2	NOMINAL SIZE ØD1	ACTUAL SIZE - ROD OR PISTON APPLICATION ød1	ød2	ØD1	ØD2	L2	L1
.375" - C/S				h9	H9	H9	h9		+.010/-.000
XP-375-05.125-625B	5-1/8	5-7/8	5/8	5.125	5.127	5.875	5.873	0.625	0.688
XP-375-05.250-375B	5-1/4	6	3/8	5.250	5.252	6.000	5.998	0.375	0.413
XP-375-05.250-500B	5-1/4	6	1/2	5.250	5.252	6.000	5.998	0.500	0.550
XP-375-05.250-562B	5-1/4	6	9/16	5.250	5.252	6.000	5.998	0.562	0.619
XP-375-05.250-625B	5-1/4	6	5/8	5.250	5.252	6.000	5.998	0.625	0.688
XP-375-05.375-625B	5-3/8	6-1/8	5/8	5.375	5.377	6.125	6.123	0.625	0.688
XP-375-05.500-375B	5-1/2	6-1/4	3/8	5.500	5.502	6.250	6.248	0.375	0.413
XP-375-05.500-500B	5-1/2	6-1/4	1/2	5.500	5.502	6.250	6.248	0.500	0.550
XP-375-05.500-625B	5-1/2	6-1/4	5/8	5.500	5.502	6.250	6.248	0.625	0.688
XP-375-05.750-625B	5-3/4	6-1/2	5/8	5.750	5.752	6.500	6.498	0.625	0.688
XP-375-05.875-625B	5-7/8	6-5/8	5/8	5.875	5.877	6.625	6.623	0.625	0.688
XP-375-06.000-375B	6	6-3/4	3/8	6.000	6.002	6.750	6.748	0.375	0.413
XP-375-06.000-500B	6	6-3/4	1/2	6.000	6.002	6.750	6.748	0.500	0.550
XP-375-06.000-562B	6	6-3/4	9/16	6.000	6.002	6.750	6.748	0.562	0.619
XP-375-06.000-625B	6	6-3/4	5/8	6.000	6.002	6.750	6.748	0.625	0.688
XP-375-06.250-375B	6-1/4	7	3/8	6.250	6.252	7.000	6.998	0.375	0.413
XP-375-06.250-500B	6-1/4	7	1/2	6.250	6.252	7.000	6.998	0.500	0.550
XP-375-06.250-625B	6-1/4	7	5/8	6.250	6.252	7.000	6.998	0.625	0.688
XP-375-06.500-375B	6-1/2	7-1/4	3/8	6.500	6.502	7.250	7.248	0.375	0.413
XP-375-06.500-500B	6-1/2	7-1/4	1/2	6.500	6.502	7.250	7.248	0.500	0.550
XP-375-06.500-625B	6-1/2	7-1/4	5/8	6.500	6.502	7.250	7.248	0.625	0.688
XP-375-06.750-625B	6-3/4	7-1/2	5/8	6.750	6.752	7.500	7.498	0.625	0.688
XP-375-06.875-625B	6-7/8	7-5/8	5/8	6.875	6.877	7.625	7.623	0.625	0.688
XP-375-07.000-500B	7	7-3/4	1/2	7.000	7.002	7.750	7.748	0.500	0.550
XP-375-07.000-625B	7	7-3/4	5/8	7.000	7.002	7.750	7.748	0.625	0.688
XP-375-07.250-375B	7-1/4	8	3/8	7.250	7.252	8.000	7.998	0.375	0.413
XP-375-07.250-500B	7-1/4	8	1/2	7.250	7.252	8.000	7.998	0.500	0.550
XP-375-07.250-625B	7-1/4	8	5/8	7.250	7.252	8.000	7.998	0.625	0.688
XP-375-07.500-500B	7-1/2	8-1/4	1/2	7.500	7.502	8.250	8.248	0.500	0.550
XP-375-07.500-625B	7-1/2	8-1/4	5/8	7.500	7.502	8.250	8.248	0.625	0.688
XP-375-07.750-375B	7-3/4	8-1/2	3/8	7.750	7.752	8.500	8.498	0.375	0.413
XP-375-07.750-500B	7-3/4	8-1/2	1/2	7.750	7.752	8.500	8.498	0.500	0.550
XP-375-07.750-625B	7-3/4	8-1/2	5/8	7.750	7.752	8.500	8.498	0.625	0.688
XP-375-08.000-500B	8	8-3/4	1/2	8.000	8.002	8.750	8.748	0.500	0.550
XP-375-08.000-625B	8	8-3/4	5/8	8.000	8.002	8.750	8.748	0.625	0.688

Surface Finish: ISO 4287 & Chamfer Information on pages 7-9.
For ISO tolerance charts, refer to pages 12-13.

Compound information available on pages 20-37.

X-PAC® Loaded B-Lip - Symmetrical U-Cup

A product of MFP Seals.

MFPSEALS®
www.mfpseals.com

PROFILE

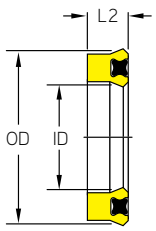

ROD APPLICATION

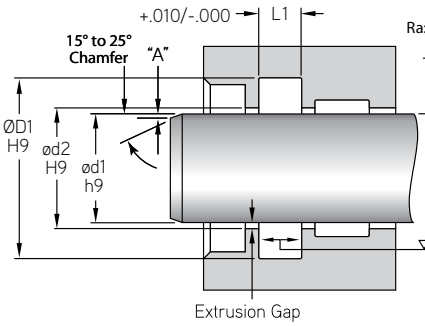

PISTON APPLICATION

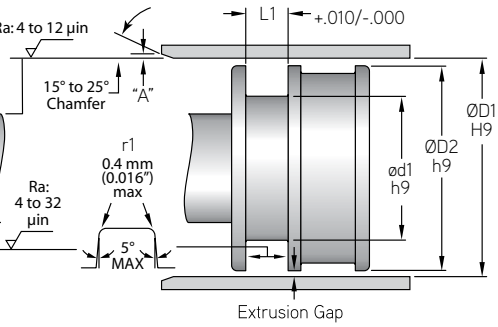

MFP PART NUMBER	NOMINAL SIZE ød1	NOMINAL SIZE ød2	NOMINAL SIZE ØD1	ACTUAL SIZE - ROD OR PISTON APPLICATION ød1	ød2	ØD1	ØD2	L2	L1
.375" - C/S				h9	H9	H9	h9		+.010/-.000
XP-375-08.125-375B	8-1/8	8-7/8	3/8	8.125	8.127	8.875	8.873	0.375	0.413
XP-375-08.250-625B	8-1/4	9	5/8	8.250	8.252	9.000	8.998	0.625	0.688
XP-375-08.500-500B	8-1/2	9-1/4	1/2	8.500	8.502	9.250	9.248	0.500	0.550
XP-375-08.500-625B	8-1/2	9-1/4	5/8	8.500	8.502	9.250	9.248	0.625	0.688
XP-375-08.750-500B	8-3/4	9-1/2	1/2	8.750	8.752	9.500	9.498	0.500	0.550
XP-375-08.750-625B	8-3/4	9-1/2	5/8	8.750	8.752	9.500	9.498	0.625	0.688
XP-375-09.000-375B	9	9 3/4	3/8	9.000	9.002	9.750	9.748	0.375	0.413
XP-375-09.000-625B	9	9-3/4	5/8	9.000	9.002	9.750	9.748	0.625	0.688
XP-375-09.250-500B	9-1/4	10	1/2	9.250	9.252	10.000	9.998	0.500	0.550
XP-375-09.250-625B	9-1/4	10	5/8	9.250	9.252	10.000	9.998	0.625	0.688
XP-375-09.500-625B	9-1/2	10-1/4	5/8	9.500	9.502	10.250	10.248	0.625	0.688
XP-375-09.750-625B	9-3/4	10-1/2	5/8	9.750	9.752	10.500	10.498	0.625	0.688
XP-375-10.000-625B	10	10-3/4	5/8	10.000	10.002	10.750	10.748	0.625	0.688
XP-375-10.250-500B	10-1/4	11	1/2	10.250	10.252	11.000	10.998	0.500	0.550
XP-375-10.500-375B	10 1/2	11 1/4	3/8	10.500	10.502	11.250	11.248	0.375	0.413
XP-375-10.500-625B	10-1/2	11-1/4	5/8	10.500	10.502	11.250	11.248	0.625	0.688
XP-375-10.750-625B	10-3/4	11-1/2	5/8	10.750	10.752	11.500	11.498	0.625	0.688
XP-375-11.000-625B	11	11-3/4	5/8	11.000	11.002	11.750	11.748	0.625	0.688
XP-375-11.250-625B	11-1/4	12	5/8	11.250	11.252	12.000	11.998	0.625	0.688
XP-375-11.500-625B	11-1/2	12-1/4	5/8	11.500	11.502	12.250	12.248	0.625	0.688
XP-375-11.750-625B	11-3/4	12-1/2	5/8	11.750	11.752	12.500	12.498	0.625	0.688
XP-375-12.000-625B	12	12-3/4	5/8	12.000	12.002	12.750	12.748	0.625	0.688
XP-375-12.750-625B	12-3/4	13-1/2	5/8	12.750	12.752	13.500	13.498	0.625	0.688
XP-375-13.250-625B	13-1/4	14	5/8	13.250	13.252	14.000	13.998	0.625	0.688
XP-375-13.625-625B	13-5/8	14-3/8	5/8	13.625	13.627	14.375	14.373	0.625	0.688
XP-375-14.000-625B	14	14-3/4	5/8	14.000	14.002	14.750	14.748	0.625	0.688
XP-375-14.250-625B	14-1/4	15	5/8	14.250	14.252	15.000	14.998	0.625	0.688
XP-375-14.375-625B	14-3/8	15-1/8	5/8	14.375	14.377	15.125	15.123	0.625	0.688
XP-375-14.750-625B	14-3/4	15-1/2	5/8	14.750	14.752	15.500	15.498	0.625	0.688
XP-375-15.250-625B	15-1/4	16	5/8	15.250	15.252	16.000	15.998	0.625	0.688
XP-375-18.500-500B	18-1/2	19-1/4	1/2	18.500	18.502	19.250	19.248	0.500	0.550
XP-375-27.750-625B	27-3/4	28-1/2	5/8	27.750	27.752	28.500	28.498	0.625	0.688
XP-375-30.250-625B	30-1/4	31	5/8	30.250	30.252	31.000	30.998	0.625	0.688
XP-375-35.000-625B	35	35-3/4	5/8	35.000	35.002	35.750	35.748	0.625	0.688
XP-375-40.250-625B	40-1/4	41	5/8	40.250	40.252	41.000	40.998	0.625	0.688

Compound information available on pages 20-37.

Surface Finish: ISO 4287 & Chamfer Information on pages 7-9.
For ISO tolerance charts, refer to pages 12-13.

MFPSEALS
www.mfpseals.com

X-PAC® Loaded B-Lip - Symmetrical U-Cup

A product of MFP Seals.

PROFILE

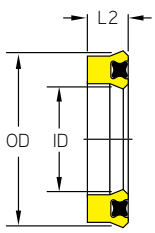

ROD APPLICATION

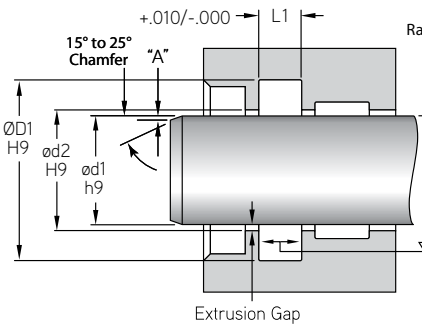

PISTON APPLICATION

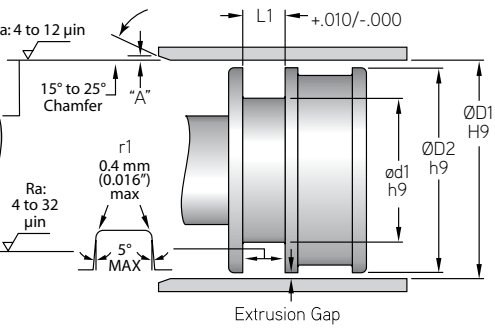

MFP PART NUMBER	NOMINAL SIZE ød1	NOMINAL SIZE ød2	NOMINAL SIZE ØD1	ACTUAL SIZE - ROD OR PISTON APPLICATION ød1	ød2	ØD1	ØD2	L2	L1
.406" - C/S				h9	H9	H9	h9		+.010/-.000
XP-406-08.500-500B	8-1/2	9-5/16	1/2	8.500	8.502	9.312	9.310	0.500	0.550
.437" - C/S				h9	H9	H9	h9		+.010/-.000
XP-437-03.000-690B	3	3-7/8	11/16	3.000	3.002	3.875	3.873	0.690	0.759
XP-437-03.375-1000B	3-3/8	4-1/4	1	3.375	3.377	4.250	4.248	1.000	1.100
XP-437-03.875-750B	3-7/8	4-3/4	3/4	3.875	3.877	4.750	4.748	0.750	0.825
XP-437-04.000-750B	4	4-7/8	3/4	4.000	4.002	4.875	4.873	0.750	0.825
XP-437-04.500-750B	4-1/2	5-3/8	3/4	4.500	4.502	5.375	5.373	0.750	0.825
XP-437-04.750-750B	4-3/4	5-5/8	3/4	4.750	4.752	5.625	5.623	0.750	0.825
XP-437-05.500-500B	5-1/2	6-3/8	1/2	5.500	5.502	6.375	6.373	0.500	0.550
XP-437-07.500-500B	7-3/4	8-3/8	1/2	7.500	7.502	8.375	8.373	0.500	0.550
XP-437-10.625-625B	10-5/8	11-1/4	5/8	10.625	10.627	11.500	11.498	0.625	0.688
XP-437-13.125-437B	13-1/8	14	7/16	13.125	13.127	14.000	13.998	0.437	0.483
.500" - C/S				h9	H9	H9	h9		+.010/-.000
XP-500-01.250-750B	1-1/4	2-1/4	3/4	1.250	1.252	2.250	2.248	0.750	0.825
XP-500-01.750-750B	1-3/4	2-3/4	3/4	1.750	1.752	2.750	2.748	0.750	0.825
XP-500-01.875-625B	1-7/8	2-7/8	5/8	1.875	1.877	2.875	2.873	0.625	0.688
XP-500-02.000-500B	2	3	1/2	2.000	2.002	3.000	2.998	0.500	0.550
XP-500-02.000-750B	2	3	3/4	2.000	2.002	3.000	2.998	0.750	0.825
XP-500-02.375-500B	2-3/8	3-3/8	1/2	2.375	2.377	3.375	3.373	0.500	0.550
XP-500-02.500-500B	2-1/2	3-1/2	1/2	2.500	2.502	3.500	3.498	0.500	0.550
XP-500-02.500-750B	2-1/2	3-1/2	3/4	2.500	2.502	3.500	3.498	0.750	0.825
XP-500-02.750-750B	2-3/4	3-3/4	3/4	2.750	2.752	3.750	3.748	0.750	0.825
XP-500-03.000-500B	3	4	1/2	3.000	3.002	4.000	3.998	0.500	0.550
XP-500-03.000-625B	3	4	5/8	3.000	3.002	4.000	3.998	0.625	0.688
XP-500-03.000-750B	3	4	3/4	3.000	3.002	4.000	3.998	0.750	0.825
XP-500-03.000-875B	3	4	7/8	3.000	3.002	4.000	3.998	0.875	0.963
XP-500-03.250-1000B	3-1/4	4-1/4	1	3.250	3.252	4.250	4.248	1.000	1.100
XP-500-03.250-750B	3-1/4	4-1/4	3/4	3.250	3.252	4.250	4.248	0.750	0.825
XP-500-03.375-625B	3-3/8	4-3/8	5/8	3.375	3.377	4.375	4.373	0.625	0.688
XP-500-03.500-500B	3-1/2	41/2	1/2	3.500	3.502	4.500	4.498	0.500	0.550
XP-500-03.500-750B	3-1/2	4-1/2	3/4	3.500	3.502	4.500	4.498	0.750	0.825
XP-500-03.750-690B	3-3/4	4-3/4	11/16	3.750	3.752	4.750	4.748	0.690	0.759
XP-500-04.000-500B	4	5	1/2	4.000	4.002	5.000	4.998	0.500	0.550
XP-500-04.000-625B	3-3/4	4-3/4	5/8	4.000	4.002	5.000	4.998	0.625	0.688
XP-500-04.000-675B	4	5	43/64	4.000	4.002	5.000	4.998	0.675	0.743

Surface Finish: ISO 4287 & Chamfer Information on pages 7-9.
For ISO tolerance charts, refer to pages 12-13.

Compound information available on pages 20-37.

X-PAC® Loaded B-Lip - Symmetrical U-Cup

A product of MFP Seals.

MFPSEALS®
www.mfpseals.com

PROFILE

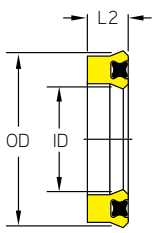

ROD APPLICATION

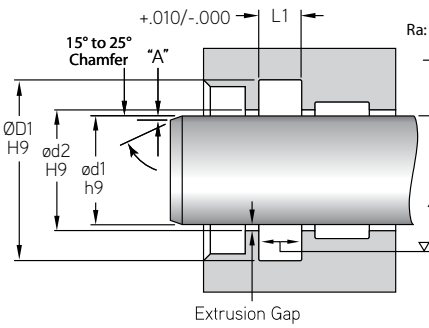

PISTON APPLICATION

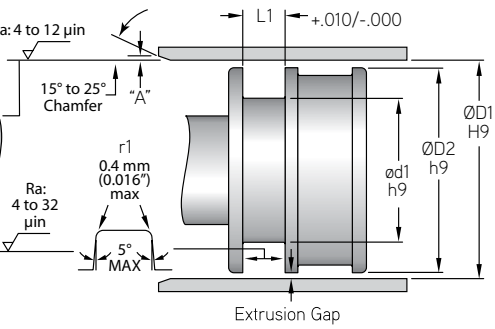

MFP PART NUMBER	NOMINAL SIZE ød1	NOMINAL SIZE ød2	NOMINAL SIZE ØD1	ACTUAL SIZE - ROD OR PISTON APPLICATION ød1	ød2	ØD1	ØD2	L2	L1
.500" - C/S				h9	H9	H9	h9		+.010/-.000
XP-500-04.000-750B	4	5	3/4	4.000	4.002	5.000	4.998	0.750	0.825
XP-500-04.250-750B	4-1/4	5-1/4	3/4	4.250	4.252	5.250	5.248	0.750	0.825
XP-500-04.375-750B	4-3/8	5-3/8	3/4	4.375	4.377	5.375	5.373	0.750	0.825
XP-500-04.500-500B	4-1/2	5-1/2	1/2	4.500	4.502	5.500	5.498	0.500	0.550
XP-500-04.500-750B	4-1/2	5-1/2	3/4	4.500	4.502	5.500	5.498	0.750	0.825
XP-500-04.750-690B	4-3/4	5-3/4	11/16	4.750	4.752	5.750	5.748	0.690	0.759
XP-500-04.750-750B	4-3/4	5-3/4	3/4	4.750	4.752	5.750	5.748	0.750	0.825
XP-500-05.000-500B	5	6	1/2	5.000	5.002	6.000	5.998	0.500	0.550
XP-500-05.000-625B	5	6	5/8	5.000	5.002	6.000	5.998	0.625	0.688
XP-500-05.000-750B	5	6	3/4	5.000	5.002	6.000	5.998	0.750	0.825
XP-500-05.250-500B	5-1/4	6-1/4	1/2	5.250	5.252	6.250	6.248	5.000	0.550
XP-500-05.250-750B	5-1/4	6-1/4	3/4	5.250	5.252	6.250	6.248	0.750	0.825
XP-500-05.375-750B	5-3/8	6-3/8	3/4	5.375	5.377	6.375	6.373	0.750	0.825
XP-500-05.500-625B	5-1/2	6-1/2	5/8	5.500	5.502	6.500	6.498	0.625	0.688
XP-500-05.500-750B	5-1/2	6-1/2	3/4	5.500	5.502	6.500	6.498	0.750	0.825
XP-500-05.750-750B	5-3/4	6-3/4	3/4	5.750	5.752	6.750	6.748	0.750	0.825
XP-500-05.875-750B	5-7/8	6-7/8	3/4	5.875	5.877	6.875	6.873	0.750	0.825
XP-500-06.000-500B	6	7	1/2	6.000	6.002	7.000	6.998	0.500	0.550
XP-500-06.000-750B	6	7	3/4	6.000	6.002	7.000	6.998	0.750	0.825
XP-500-06.250-750B	6-1/4	7-1/4	3/4	6.250	6.252	7.250	7.248	0.750	0.825
XP-500-06.500-750B	6-1/2	7-1/2	3/4	6.500	6.502	7.500	7.498	0.750	0.825
XP-500-06.750-750B	6-3/4	7-3/4	3/4	6.750	6.752	7.750	7.748	0.750	0.825
XP-500-07.000-750B	7	8	3/4	7.000	7.002	8.000	7.998	0.750	0.825
XP-500-07.250-750B	7-1/4	8-1/4	3/4	7.250	7.252	8.250	8.248	0.750	0.825
XP-500-07.500-750B	7-1/2	8-1/2	3/4	7.500	7.502	8.500	8.498	0.750	0.825
XP-500-07.750-750B	7-3/4	8-3/4	3/4	7.750	7.752	8.750	8.748	0.750	0.825
XP-500-08.000-500B	8	9	1/2	8.000	8.002	9.000	8.998	0.500	0.550
XP-500-08.000-625B	8	9	5/8	8.000	8.002	9.000	8.998	0.625	0.688
XP-500-08.000-750B	8	9	3/4	8.000	8.002	9.000	8.998	0.750	0.825
XP-500-08.500-750B	8-1/2	9-1/2	3/4	8.500	8.502	9.500	9.498	0.750	0.825
XP-500-09.000-687B	9	10	11/16	9.000	9.002	10.000	9.998	0.687	0.756
XP-500-09.000-690B	9	10	0.690	9.000	9.002	10.000	9.998	0.690	0.759
XP-500-09.000-750B	9	10	3/4	9.000	9.002	10.000	9.998	0.750	0.825
XP-500-09.250-750B	9-1/4	10-1/4	3/4	9.250	9.252	10.250	10.248	0.750	0.825
XP-500-09.500-750B	9-1/2	10-1/2	3/4	9.500	9.502	10.500	10.498	0.750	0.825

Compound information available on pages 20-37.

Surface Finish: ISO 4287 & Chamfer Information on pages 7-9.
For ISO tolerance charts, refer to pages 12-13.

MFPSEALS®
www.mfpseals.com

X-PAC® Loaded B-Lip - Symmetrical U-Cup

A product of MFP Seals.

PROFILE

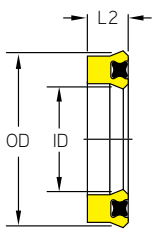

ROD APPLICATION

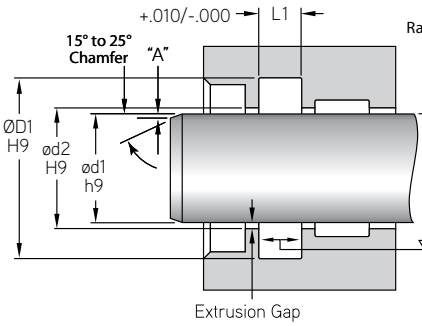

PISTON APPLICATION

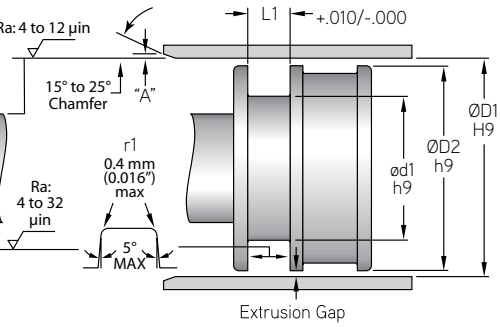

MFP PART NUMBER	NOMINAL SIZE ød1	NOMINAL SIZE ød2	NOMINAL SIZE ØD1	ACTUAL SIZE - ROD OR PISTON APPLICATION ød1	ød2	ØD1	ØD2	L2	L1
.500" - C/S				h9	H9	H9	h9		+.010/-.000
XP-500-09.750-750B	9-3/4	10-3/4	3/4	9.750	9.752	10.750	10.748	0.750	0.825
XP-500-10.000-750B	10	11	3/4	10.000	10.002	11.000	10.998	0.750	0.825
XP-500-10.500-1000B	10-1/2	11-1/2	1	10.500	10.502	11.500	11.498	1.000	1.100
XP-500-10.500-750B	10-1/2	11-1/2	3/4	10.500	10.502	11.500	11.498	0.750	0.825
XP-500-10.625-750B	10-5/8	11-5/8	3/4	10.625	10.627	11.625	11.623	0.750	0.825
XP-500-10.750-750B	10-3/4	11-3/4	3/4	10.750	10.752	11.750	11.748	0.750	0.825
XP-500-11.000-750B	11	12	3/4	11.000	11.002	12.000	11.998	0.750	0.825
XP-500-11.750-750B	11-3/4	12-3/4	3/4	11.750	11.752	12.750	12.748	0.750	0.825
XP-500-11.875-750B	11-7/8	12-7/8	3/4	11.875	11.877	12.875	12.873	0.750	0.825
XP-500-12.000-690B	12	13	0.690	12.000	12.002	13.000	12.998	0.690	0.759
XP-500-12.000-750B	12	13	3/4	12.000	12.002	13.000	12.998	0.750	0.825
XP-500-12.500-750B	12-1/2	13-1/2	3/4	12.500	12.502	13.500	13.498	0.750	0.825
XP-500-12.750-750B	12-3/4	13-3/4	3/4	12.750	12.752	13.750	13.748	0.750	0.825
XP-500-13.000-750B	13	14	3/4	13.000	13.002	14.000	13.998	0.750	0.825
XP-500-13.500-750B	13-1/2	14-1/2	3/4	13.500	13.502	14.500	14.498	0.750	0.825
XP-500-14.000-750B	14	15	3/4	14.000	14.002	15.000	14.998	0.750	0.825
XP-500-15.000-750B	15	16	3/4	15.000	15.002	16.000	15.998	0.750	0.825
XP-500-15.750-750B	15-3/4	16-3/4	3/4	15.750	15.752	16.750	16.748	0.750	0.825
XP-500-16.000-750B	16	17	3/4	16.000	16.002	17.000	16.998	0.750	0.825
XP-500-16.500-750B	16-1/2	17-1/2	3/4	16.500	16.502	17.500	17.498	0.750	0.825
XP-500-17.000-750B	17	18	3/4	17.000	17.002	18.000	17.998	0.750	0.825
XP-500-17.500-750B	17-1/2	18-1/2	3/4	17.500	17.502	18.500	18.498	0.750	0.825
XP-500-18.000-750B	18	19	3/4	18.000	18.002	19.000	18.998	0.750	0.825
XP-500-19.000-750B	19	20	3/4	19.000	19.002	20.000	19.998	0.750	0.825
XP-500-20.000-750B	20	21	3/4	20.000	20.002	21.000	20.998	0.750	0.825
XP-500-21.000-750B	21	22	3/4	21.000	21.002	22.000	21.998	0.750	0.825
XP-500-23.000-750B	23	24	3/4	23.000	23.002	24.000	23.998	0.750	0.825
XP-500-24.500-750B	24-1/2	25-1/2	3/4	24.500	24.502	25.500	25.498	0.750	0.825
XP-500-25.500-750B	25-1/2	26-1/2	3/4	25.500	25.502	26.500	26.498	0.750	0.825
XP-500-30.250-750B	30-1/4	31-1/4	3/4	30.250	30.252	31.250	31.248	0.750	0.825
.562" - C/S				h9	H9	H9	h9		+.010/-.000
XP-562-03.000-625B	3	4-1/8	5/8	3.000	3.002	4.125	4.123	0.625	0.688
XP-562-03.250-1000B	3-1/4	4-3/8	1	3.250	3.252	4.375	4.373	1.000	1.100
XP-562-04.000-750B	4	5-1/8	3/4	4.000	4.002	5.125	5.123	0.750	0.825

Surface Finish: ISO 4287 & Chamfer Information on pages 7-9.
For ISO tolerance charts, refer to pages 12-13.

Compound information available on pages 20-37.

X-PAC® Loaded B-Lip - Symmetrical U-Cup

A product of MFP Seals.

MFPSEALS®
www.mfpseals.com

PROFILE

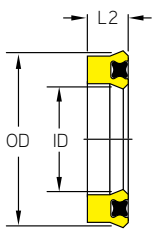

ROD APPLICATION

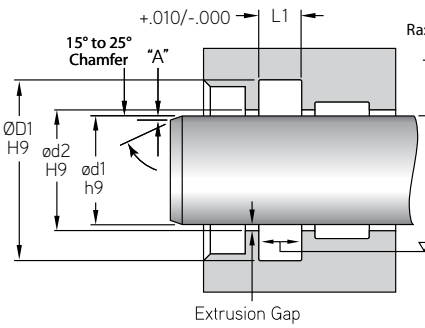

PISTON APPLICATION

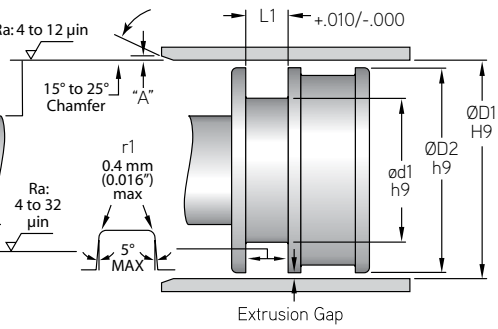

MFP PART NUMBER	NOMINAL SIZE ød1	NOMINAL SIZE ød2	NOMINAL SIZE ØD1	ACTUAL SIZE - ROD OR PISTON APPLICATION ød1	ød2	ØD1	ØD2	L2	L1
.625" - C/S				h9	H9	H9	h9		+.010/-.000
XP-625-01.625-1000B	1-5/8	2-7/8	1	1.625	1.627	2.875	2.873	1.000	1.100
XP-625-03.250-1000B	3-1/4	4-1/2	1	3.250	3.252	4.500	4.498	1.000	1.100
XP-625-03.250-750B	3-1/4	4-1/2	3/4	3.250	3.252	4.500	4.498	0.750	0.825
XP-625-03.750-1000B	3-3/4	5	1	3.750	3.752	5.000	4.998	1.000	1.100
XP-625-04.250-1000B	4-1/4	5-1/2	1	4.250	4.252	5.500	5.498	1.000	1.100
XP-625-04.250-750B	4-1/4	5-1/2	3/4	4.250	4.252	5.500	5.498	0.750	0.825
XP-625-05.250-1000B	5-1/4	6-1/2	1	5.250	5.252	6.500	6.498	1.000	1.100
XP-625-05.750-1000B	5-3/4	7	1	5.750	5.752	7.000	6.998	1.000	1.100
XP-625-06.000-625B	6	7-1/4	5/8	6.000	6.002	7.250	7.248	0.625	0.688
XP-625-06.250-1000B	6-1/4	7-1/2	1	6.250	6.252	7.500	7.498	1.000	1.100
XP-625-07.000-1000B	7	8-1/4	1	7.000	7.002	8.250	8.248	1.000	1.100
XP-625-07.500-1000B	7-1/2	8-3/4	1	7.500	7.502	8.750	8.748	1.000	1.100
XP-625-08.250-1000B	8-1/4	9-1/2	1	8.250	8.252	9.500	9.498	1.000	1.100
XP-625-08.500-1000B	8-1/2	9-3/4	1	8.500	8.502	9.750	9.748	1.000	1.100
XP-625-10.000-1000B	10	11-1/4	1	10.000	10.002	11.250	11.248	1.000	1.100
XP-625-10.500-625B	10-1/2	11-3/4	5/8	10.500	10.502	11.750	11.748	0.625	0.688
XP-625-11.000-1000B	11	12-1/4	1	11.000	11.002	12.250	12.248	1.000	1.100
XP-625-11.250-1000B	11-1/4	12-1/2	1	11.250	11.252	12.500	12.498	1.000	1.100
XP-625-11.500-1000B	11-1/2	12-3/4	1	11.500	11.502	12.750	12.748	1.000	1.100
XP-625-12.250-1000B	12-1/4	13-1/2	1	12.250	12.252	13.500	13.498	1.000	1.100
XP-625-13.000-1000B	13	14-1/4	1	13.000	13.002	14.250	14.248	1.000	1.100
XP-625-13.500-875B	13-1/2	14-3/4	7/8	13.500	13.502	14.750	14.748	0.875	0.963
XP-625-14.750-1000B	14-3/4	16	1	14.750	14.752	16.000	15.998	1.000	1.100
XP-625-15.500-1000B	15-1/2	16-3/4	1	15.500	15.502	16.750	16.748	1.000	1.100
XP-625-18.000-1000B	18	19-1/4	1	18.000	18.002	19.250	19.248	1.000	1.100
XP-625-18.750-1000B	18-3/4	20	1	18.750	18.752	20.000	19.998	1.000	1.100
XP-625-30.750-1000B	30-3/4	32	1	30.750	30.752	32.000	31.998	1.000	1.100
.687" - C/S				h9	H9	H9	h9		+.010/-.000
XP-687-24.375-687B	24-3/8	25-3/4	11/16	24.375	24.377	25.750	25.748	0.687	0.756
.750" - C/S				h9	H9	H9	h9		+.010/-.000
XP-750-03.500-750B	3-1/2	5	3/4	3.500	3.502	5.000	4.998	0.750	0.825
XP-750-08.000-1250B	8	9-1/2	1-1/4	8.000	8.002	9.500	9.498	1.250	1.375
XP-750-08.500-1125B	8-1/2	10	1-1/8	8.500	8.502	10.000	9.998	1.125	1.238
XP-750-09.000-1250B	9	10-1/2	1-1/4	9.000	9.002	10.500	10.498	1.250	1.375

Compound information available on pages 20-37.

Surface Finish: ISO 4287 & Chamfer Information on pages 7-9.
For ISO tolerance charts, refer to pages 12-13.

MFPSEALS
www.mfpseals.com

X-PAC® Loaded B-Lip - Symmetrical U-Cup

A product of MFP Seals.

PROFILE

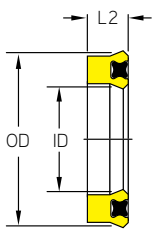

ROD APPLICATION

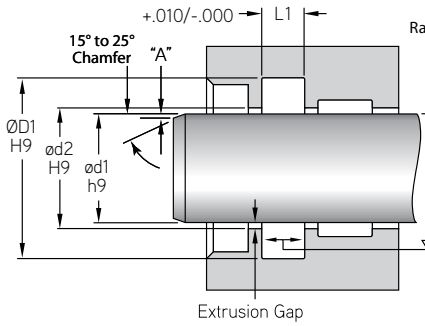

PISTON APPLICATION

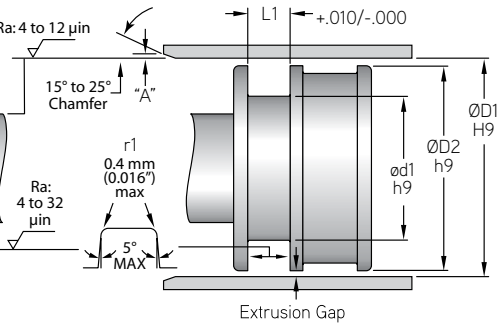

MFP PART NUMBER	NOMINAL SIZE ød1	NOMINAL SIZE ød2	NOMINAL SIZE ØD1	ACTUAL SIZE - ROD OR PISTON APPLICATION ød1	ød2	ØD1	ØD2	L2	L1
.750" - C/S				h9	H9	H9	h9		+.010/-.000
XP-750-09.000-1500B	9	10-1/2	1-1/2	9.000	9.002	10.500	10.498	1.500	1.650
XP-750-10.000-1250B	10	11-1/2	1-1/4	10.000	10.002	11.500	11.498	1.250	1.375
XP-750-10.500-1000B	10-1/2	12	1	10.500	10.502	12.000	11.998	1.000	1.100
XP-750-10.500-1250B	10-1/2	12	1-1/4	10.500	10.502	12.000	11.998	1.250	1.375
XP-750-12.000-1250B	12	13-1/2	1-1/4	12.000	12.002	13.500	13.498	1.250	1.375
XP-750-14.000-1250B	14	15-1/2	1-1/4	14.000	14.002	15.500	15.498	1.250	1.375
XP-750-14.250-1250B	14-1/4	15-3/4	1-1/4	14.250	14.252	15.750	15.748	1.250	1.375
XP-750-14.500-1125B	14-1/2	16	1-1/8	14.500	14.502	16.000	15.998	1.125	1.238
XP-750-16.000-1250B	16	17-1/2	1-1/4	16.000	16.002	17.500	17.498	1.125	1.375
XP-750-17.000-1250B	17	18-1/2	1-1/4	17.000	17.002	18.500	18.498	1.250	1.375
XP-750-18.000-1250B	18	19-1/2	1-1/4	18.000	18.002	19.500	19.498	1.250	1.375
XP-750-18.500-1250B	18-1/2	20	1-1/4	18.500	18.502	20.000	19.998	1.250	1.375
XP-750-20.000-1250B	20	21-1/2	1-1/4	20.000	20.002	21.500	21.498	1.250	1.375

Surface Finish: ISO 4287 & Chamfer Information on pages 7-9.
For ISO tolerance charts, refer to pages 12-13.

Compound information available on pages 20-37.

X-PAC® Loaded Straight-Lip - Symmetrical U-Cup

A product of MFP Seals.

MFPSEALS®
www.mfpseals.com

XP - X-PAC® LOADED STRAIGHT-LIP SYMMETRICAL U-CUP

X-PAC® U-Cups are a very versatile reciprocating seal design, for use up to 350 bar (5,000 psi). The rubber expander creates a compression style seal while still operating as a pressure actuated U-Cup design. The result is better low-pressure sealing and less startup leakage. The primary function of a Straight-Lip X-PAC® is for linear piston applications. MFP Seals' X-PAC® U-Cups feature a knife trimmed sealing lip for increased sealability.

This seal is available in the following compounds: U2145, U2150, U2151, U2162, U4150, H2155, V7675, N6021, N6023, N6034, with an Expander in N6014, V7100 or V7155.

Straight Lip

MFP PART NUMBER

XP-375-01.100-375U2145

SEAL TYPE | CROSS SECTION | ød1 | L2 | COMPOUND

PROFILE

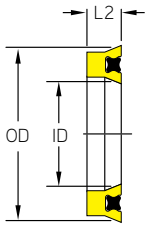

ROD APPLICATION

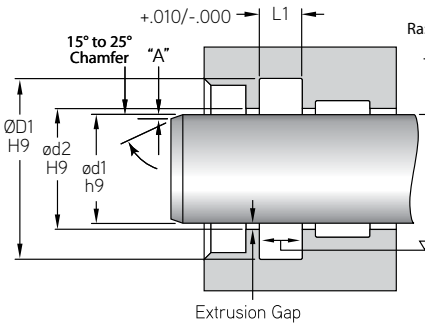

PISTON APPLICATION

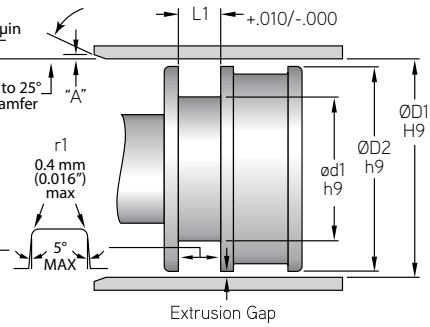

Pressure: 350 bar (5,000 psi) **Max. Velocity:** 0.5 m/s (< 1.6 ft./s)

MAXIMUM EXTRUSION GAP RECOMMENDATION

MFP SERIES	ROD DIAMETER	GROOVE DIAMETER	GROOVE WIDTH	RADIAL CLEARANCE EXTRUSION GAP		
	ød1 h9	**ØD1** H9	**L1** +.010	2300psi	3600psi	5800psi
XP-125	.750 - 2.750	ød1 + .250	.138 - .413	0.008	0.004	-
XP-156	1.375	ød1 + .312	.172	0.014	0.008	-
XP-187	0.625 - 3.750	ød1 + .375	.207 - .413	0.014	0.008	-
XP-250	0.500 - 6.500	ød1 + .500	.275 - .825	0.018	0.010	0.004
XP-312	0.875 - 5.500	ød1 + .624	.344 - .963	0.020	0.012	0.006
XP-375	1.250 - 8.750	ød1 + .750	.413 - .688	0.020	0.012	0.006
XP-500	2.750 - 3.000	ød1 + 1.000	.825	0.024	0.012	0.008

NOTE: The above data are maximum values for extrusion gap.
Material type, pressure, temperature, speed and extrusion gap will affect extrusion resistance.
Maximum values, pressure, speed, temperature and extrusion gap should not be applied continuously nor simultaneously.

Compound information available on pages 20-37.

Surface Finish: ISO 4287 & Chamfer Information on pages 7-9.
For ISO tolerance charts, refer to pages 12-13.

MFPSEALS®
www.mfpseals.com

X-PAC® Loaded Straight-Lip - Symmetrical U-Cup

A product of MFP Seals.

PROFILE

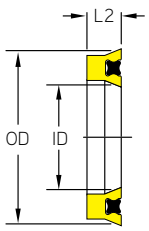

ROD APPLICATION

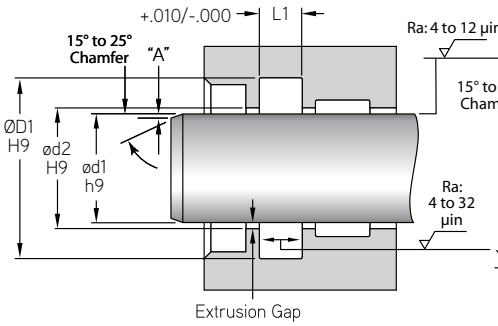

PISTON APPLICATION

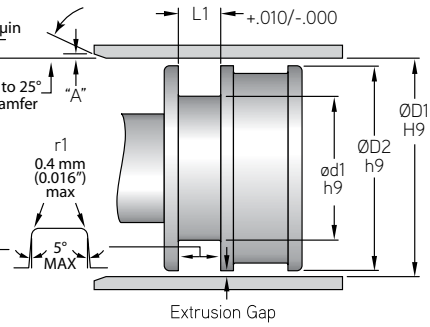

MFP PART NUMBER	PROFILE STYLE	PISTON APPLICATION ød1	ød2	ØD1	ØD2	L2	L1
.125" - C/S		h9	H9	H9	h9		+.010/-.000
XP-125-00.125-125	Straight Lip	0.125	0.126	0.375	0.374	0.125	0.138
XP-125-00.187-125	Straight Lip	0.187	0.188	0.437	0.436	0.125	0.138
XP-125-00.250-125	Straight Lip	0.250	0.251	0.500	0.499	0.125	0.138
XP-125-00.312-125	Straight Lip	0.312	0.313	0.562	0.561	0.125	0.138
XP-125-00.375-125	Straight Lip	0.375	0.376	0.625	0.624	0.125	0.138
XP-125-00.500-125	Straight Lip	0.500	0.501	0.750	0.749	0.125	0.138
XP-125-00.625-250	Straight Lip	0.625	0.626	0.875	0.874	0.250	0.275
XP-125-00.750-125	Straight Lip	0.750	0.751	1.000	0.999	0.125	0.138
XP-125-00.750-250	Straight Lip	0.750	0.751	1.000	0.999	0.250	0.275
XP-125-00.812-125	Straight Lip	0.812	0.813	1.062	1.061	0.125	0.138
XP-125-00.875-125	Straight Lip	0.875	0.876	1.125	1.124	0.125	0.138
XP-125-01.000-125	Straight Lip	1.000	1.001	1.250	1.249	0.125	0.138
XP-125-01.125-125	Straight Lip	1.125	1.126	1.375	1.374	0.125	0.138
XP-125-01.125-187	Straight Lip	1.125	1.126	1.375	1.374	0.187	0.207
XP-125-01.250-125	Straight Lip	1.250	1.251	1.500	1.499	0.125	0.138
XP-125-01.375-125	Straight Lip	1.375	1.376	1.625	1.624	0.125	0.138
XP-125-01.625-125	Straight Lip	1.625	1.626	1.875	1.874	0.125	0.138
XP-125-01.750-125	Straight Lip	1.750	1.751	2.000	1.999	0.125	0.138
XP-125-02.375-125	Straight Lip	2.375	2.376	2.625	2.624	0.125	0.138
XP-125-02.500-125	Straight Lip	2.500	2.501	2.750	2.749	0.125	0.138
.156" - C/S		h9	H9	H9	h9		+.010/-.000
XP-156-00.500-156	Straight Lip	0.500	0.501	0.812	0.811	0.156	0.172
XP-156-00.625-156	Straight Lip	0.625	0.626	0.938	0.937	0.156	0.172
.187" - C/S		h9	H9	H9	h9		+.010/-.000
XP-187-00.250-187	Straight Lip	0.250	0.251	0.625	0.624	0.187	0.207
XP-187-00.625-187	Straight Lip	0.625	0.626	1.000	0.999	0.187	0.207
XP-187-00.687-187	Straight Lip	0.687	0.688	1.063	1.062	0.187	0.207
XP-187-01.000-187	Straight Lip	1.000	1.001	1.375	1.374	0.187	0.207
XP-187-01.125-187	Straight Lip	1.125	1.126	1.500	1.499	0.187	0.207
XP-187-01.250-187	Straight Lip	1.250	1.251	1.625	1.624	0.187	0.207
XP-187-01.500-187	Straight Lip	1.500	1.501	1.875	1.874	0.187	0.207
XP-187-01.500-250	Straight Lip	1.500	1.501	1.875	1.874	0.25	0.275
XP-187-01.625-187	Straight Lip	1.625	1.626	2.000	1.999	0.187	0.207
XP-187-01.625-375	Straight Lip	1.625	1.626	2.000	1.999	0.375	0.413

Surface Finish: ISO 4287 & Chamfer Information on pages 7-9.
For ISO tolerance charts, refer to pages 12-13.

Compound information available on pages 20-37.

X-PAC® Loaded Straight-Lip - Symmetrical U-Cup

A product of MFP Seals.

MFPSEALS®
www.mfpseals.com

PROFILE

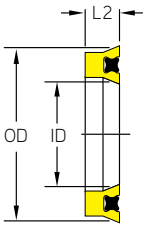

ROD APPLICATION

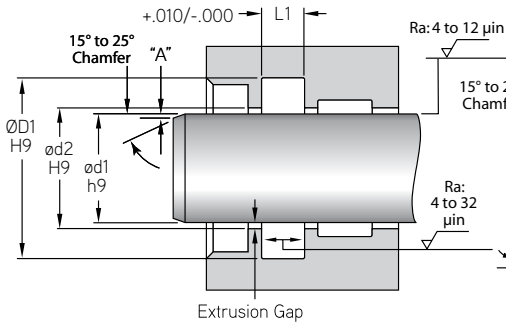

PISTON APPLICATION

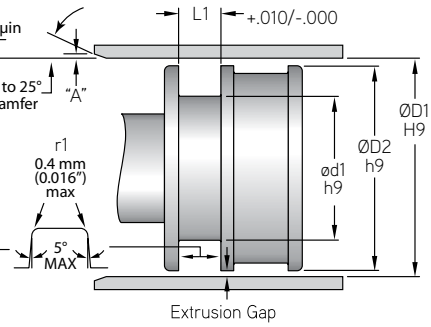

MFP PART NUMBER	PROFILE STYLE	PISTON APPLICATION ød1	ød2	ØD1	ØD2	L2	L1
.187" - C/S		h9	H9	H9	h9		+.010/-.000
XP-187-01.750-187	Straight Lip	1.750	1.751	2.125	2.124	0.187	0.207
XP-187-01.875-187	Straight Lip	1.875	1.876	2.250	2.249	0.187	0.207
XP-187-02.000-187	Straight Lip	2.000	2.001	2.375	2.374	0.187	0.207
XP-187-02.000-250	Straight Lip	2.000	2.001	2.375	2.374	0.25	0.275
XP-187-02.000-375	Straight Lip	2.000	2.001	2.375	2.374	0.375	0.413
XP-187-02.125-187	Straight Lip	2.125	2.126	2.500	2.499	0.187	0.207
XP-187-02.500-187	Straight Lip	2.500	2.501	2.875	2.874	0.187	0.207
XP-187-02.625-187	Straight Lip	2.625	2.626	3.000	2.999	0.187	0.207
XP-187-02.750-187	Straight Lip	2.750	2.751	3.125	3.124	0.187	0.207
XP-187-03.125-187	Straight Lip	3.125	3.126	3.500	3.499	0.187	0.207
XP-187-03.375-187	Straight Lip	3.375	3.376	3.750	3.749	0.187	0.207
XP-187-03.500-187	Straight Lip	3.500	3.501	3.875	3.874	0.187	0.207
XP-187-03.625-187	Straight Lip	3.625	3.626	4.000	3.999	0.187	0.207
XP-187-03.750-187	Straight Lip	3.750	3.751	4.125	4.124	0.187	0.207
XP-187-04.125-187	Straight Lip	4.125	4.126	4.500	4.499	0.187	0.207
XP-187-04.375-187	Straight Lip	4.375	4.376	4.750	4.749	0.187	0.207
XP-187-04.750-187	Straight Lip	4.750	4.751	5.125	5.124	0.187	0.207
XP-187-05.875-187	Straight Lip	5.875	5.876	6.250	6.249	0.187	0.207
.250" - C/S		h9	H9	H9	h9		+.010/-.000
XP-250-00.625-250	Straight Lip	0.625	0.626	1.125	1.124	0.25	0.275
XP-250-00.750-250	Straight Lip	0.750	0.751	1.250	1.249	0.250	0.275
XP-250-01.000-250	Straight Lip	1.000	1.001	1.500	1.499	0.250	0.275
XP-250-01.125-250	Straight Lip	1.125	1.126	1.625	1.264	0.250	0.275
XP-250-01.187-250	Straight Lip	1.187	1.188	1.687	1.686	0.250	0.275
XP-250-01.250-250	Straight Lip	1.250	1.251	1.750	1.749	0.250	0.275
XP-250-01.500-250	Straight Lip	1.500	1.501	2.000	1.999	0.25	0.275
XP-250-01.500-375	Straight Lip	1.500	1.501	2.000	1.999	0.375	0.413
XP-250-01.750-375	Straight Lip	1.750	1.751	2.250	2.249	0.375	0.413
XP-250-02.000-250	Straight Lip	2.000	2.001	2.500	2.499	0.25	0.275
XP-250-02.000-375	Straight Lip	2.000	2.001	2.500	2.499	0.375	0.413
XP-250-02.250-250	Straight Lip	2.250	2.251	2.750	2.749	0.250	0.275
XP-250-02.500-250	Straight Lip	2.500	2.501	3.000	2.999	0.250	0.275
XP-250-02.500-375	Straight Lip	2.500	2.501	3.000	2.999	0.375	0.413

Compound information available on pages 20-37.

Surface Finish: ISO 4287 & Chamfer Information on pages 7-9.
For ISO tolerance charts, refer to pages 12-13.

MFPSEALS®
www.mfpseals.com

X-PAC® Loaded Straight-Lip - Symmetrical U-Cup

A product of MFP Seals.

PROFILE

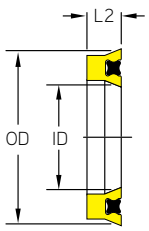

ROD APPLICATION

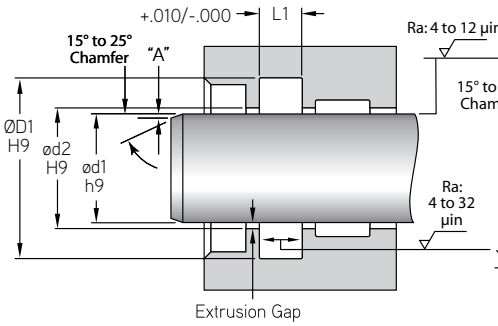

PISTON APPLICATION

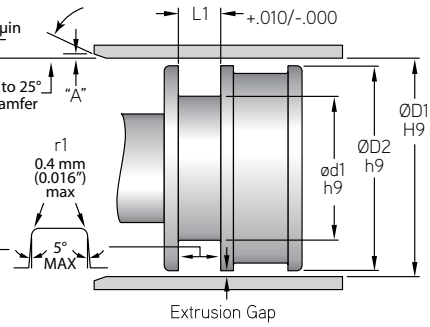

MFP PART NUMBER	PROFILE STYLE	PISTON APPLICATION ød1	ød2	ØD1	ØD2	L2	L1
.250" - C/S		h9	H9	H9	h9		+.010/-.000
XP-250-02.750-250	Straight Lip	2.750	2.751	3.250	3.249	0.250	0.275
XP-250-03.000-250	Straight Lip	3.000	3.001	3.500	3.499	0.250	0.275
XP-250-03.000-375	Straight Lip	3.000	3.001	3.500	3.499	0.375	0.413
XP-250-03.250-375	Straight Lip	3.250	3.251	3.750	3.749	0.375	0.413
XP-250-03.500-250	Straight Lip	3.500	3.501	4.000	3.999	0.250	0.275
XP-250-04.000-250	Straight Lip	4.000	4.001	4.500	4.499	0.250	0.275
XP-250-04.000-375	Straight Lip	4.000	4.001	4.500	4.499	0.375	0.413
XP-250-04.500-250	Straight Lip	4.500	4.501	5.000	4.999	0.250	0.275
XP-250-04.750-250	Straight Lip	4.750	4.751	5.250	5.249	0.250	0.275
XP-250-04.750-562	Straight Lip	4.750	4.751	5.250	5.249	0.562	0.619
XP-250-05.000-250	Straight Lip	5.000	5.001	5.500	5.499	0.250	0.275
XP-250-05.000-375	Straight Lip	5.000	5.001	5.500	5.499	0.375	0.413
XP-250-05.500-250	Straight Lip	5.500	5.501	6.000	5.999	0.250	0.275
XP-250-05.500-375	Straight Lip	5.500	5.501	6.000	5.999	0.375	0.413
XP-250-05.500-625	Straight Lip	5.500	5.501	6.000	5.999	0.625	0.688
XP-250-06.000-375	Straight Lip	6.000	6.001	6.500	6.499	0.375	0.413
XP-250-06.500-562	Straight Lip	6.500	6.501	7.000	6.999	0.562	0.619
XP-250-07.000-375	Straight Lip	7.000	7.001	7.500	7.499	0.375	0.413
XP-250-07.500-250	Straight Lip	7.500	7.501	8.000	7.999	0.250	0.275
XP-250-07.750-250	Straight Lip	7.750	7.751	8.250	8.249	0.250	0.275
XP-250-08.000-375	Straight Lip	8.000	8.001	8.500	8.499	0.375	0.413
XP-250-08.500-250	Straight Lip	8.500	8.501	9.000	8.999	0.250	0.275
XP-250-09.000-250	Straight Lip	9.000	9.001	9.500	9.499	0.250	0.275
.312" - C/S		h9	H9	H9	h9		+.010/-.000
XP-312-01.125-312	Straight Lip	1.125	1.126	1.750	1.749	0.312	0.344
XP-312-01.187-312	Straight Lip	1.187	1.188	1.812	1.813	0.312	0.344
XP-312-01.250-312	Straight Lip	1.250	1.251	1.875	1.874	0.312	0.344
XP-312-02.375-312	Straight Lip	2.375	2.376	3.000	2.999	0.312	0.344
XP-312-02.500-312	Straight Lip	2.500	2.501	3.125	3.124	0.312	0.344
XP-312-03.625-312	Straight Lip	3.625	3.626	4.250	4.249	0.312	0.344
XP-312-05.375-312	Straight Lip	5.375	5.376	6.000	5.999	0.312	0.344
XP-312-06.375-312	Straight Lip	6.375	6.376	7.000	6.999	0.312	0.344
XP-312-07.375-312	Straight Lip	7.375	7.376	8.000	7.999	0.312	0.344

Surface Finish: ISO 4287 & Chamfer Information on pages 7-9.
For ISO tolerance charts, refer to pages 12-13.

Compound information available on pages 20-37.

X-PAC® Loaded Straight-Lip - Symmetrical U-Cup

A product of MFP Seals.

MFPSEALS®
www.mfpseals.com

PROFILE

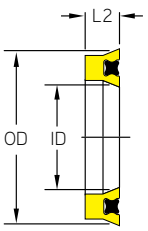

ROD APPLICATION

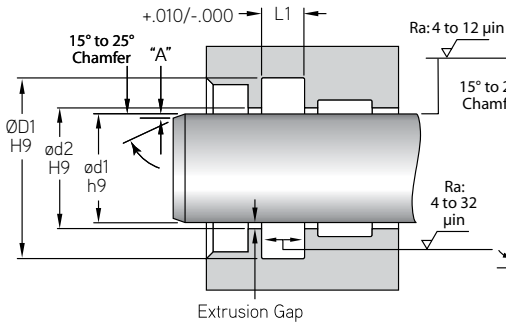

PISTON APPLICATION

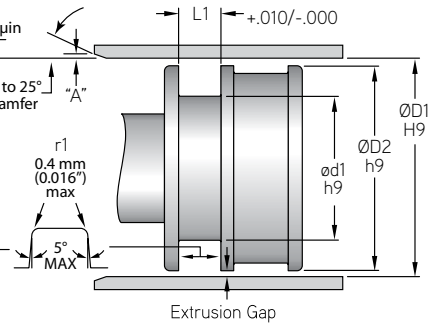

MFP PART NUMBER	PROFILE STYLE	PISTON APPLICATION ød1	ød2	ØD1	ØD2	L2	L1
.375" - C/S		h9	H9	H9	h9		+.010/-.000
XP-375-00.625-375	Straight Lip	0.625	0.626	1.375	1.374	0.375	0.413
XP-375-01.000-375	Straight Lip	1.000	1.001	1.750	1.749	0.375	0.413
XP-375-01.250-375	Straight Lip	1.250	1.251	2.000	1.999	0.375	0.413
XP-375-01.500-375	Straight Lip	1.500	1.501	2.250	2.249	0.375	0.413
XP-375-01.562-375	Straight Lip	1.562	1.563	2.312	2.311	0.375	0.413
XP-375-01.625-375	Straight Lip	1.625	1.626	2.375	2.374	0.375	0.413
XP-375-02.000-375	Straight Lip	2.000	2.001	2.750	2.749	0.375	0.413
XP-375-02.500-375	Straight Lip	2.500	2.501	3.250	3.249	0.375	0.413
XP-375-04.000-375	Straight Lip	4.000	4.001	4.750	4.749	0.375	0.413
XP-375-04.250-500	Straight Lip	4.250	4.251	5.000	4.999	0.500	0.550
XP-375-04.375-375	Straight Lip	4.375	4.376	5.125	5.124	0.375	0.413
XP-375-04.500-375	Straight Lip	4.500	4.501	5.250	5.249	0.375	0.413
XP-375-04.500-500	Straight Lip	4.500	4.501	5.250	5.249	0.500	0.550
XP-375-05.000-375	Straight Lip	5.000	5.001	5.750	5.749	0.375	0.413
XP-375-05.000-625	Straight Lip	5.000	5.001	5.750	5.749	0.625	0.688
XP-375-05.250-500	Straight Lip	5.250	5.251	6.000	5.999	0.500	0.550
XP-375-05.250-625	Straight Lip	5.250	5.251	6.000	5.999	0.625	0.688
XP-375-05.750-625	Straight Lip	5.750	5.751	6.500	6.499	0.625	0.688
XP-375-06.000-625	Straight Lip	6.000	6.001	6.750	6.749	0.625	0.688
XP-375-08.000-375	Straight Lip	8.000	8.001	8.750	8.749	0.375	0.413
XP-375-08.500-375	Straight Lip	8.500	8.501	9.250	9.249	0.375	0.413
XP-375-09.250-375	Straight Lip	9.250	9.251	10.000	9.999	0.375	0.413
XP-375-10.250-625	Straight Lip	10.250	10.251	11.000	10.999	0.625	0.688
XP-375-11.250-375	Straight Lip	11.250	11.251	12.000	11.999	0.375	0.413
XP-375-11.250-625	Straight Lip	11.250	11.251	12.000	11.999	0.625	0.688
XP-375-13.250-375	Straight Lip	13.250	13.251	14.000	13.999	0.375	0.413
XP-375-14.000-375	Straight Lip	14.000	14.001	14.750	14.749	0.375	0.413
XP-375-15.000-375	Straight Lip	15.000	15.001	15.750	15.749	0.375	0.413
XP-375-19.500-375	Straight Lip	19.500	19.501	20.250	20.249	0.375	0.413
.500" - C/S		h9	H9	H9	h9		+.010/-.000
XP-500-02.000-500	Straight Lip	2.000	2.001	3.000	2.999	0.500	0.550
XP-500-02.250-500	Straight Lip	2.250	2.251	3.250	3.249	0.500	0.550
XP-500-06.000-750	Straight Lip	6.000	6.001	7.000	6.999	0.750	0.825

Compound information available on pages 20-37.

Surface Finish: ISO 4287 & Chamfer Information on pages 7-9.
For ISO tolerance charts, refer to pages 12-13.

MFPSEALS®
www.mfpseals.com

X-PAC® Loaded Straight-Lip - Symmetrical U-Cup

A product of MFP Seals.

PROFILE

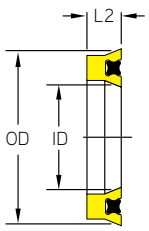

ROD APPLICATION

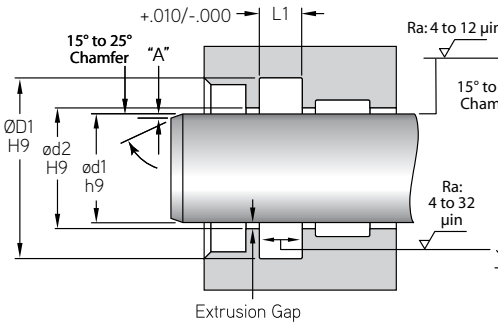

PISTON APPLICATION

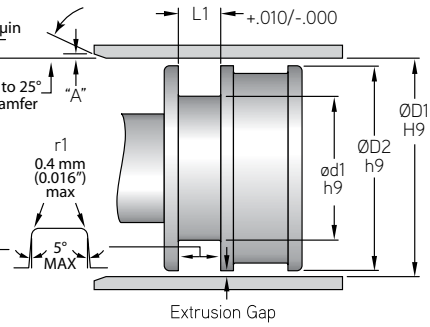

MFP PART NUMBER	PROFILE STYLE	PISTON APPLICATION ød1	ød2	ØD1	ØD2	L2	L1
.500" - C/S		h9	H9	H9	h9		+.010/-.000
XP-500-09.000-500	Straight Lip	9.000	9.001	10.000	9.999	0.500	0.550
XP-500-09.000-750	Straight Lip	9.000	9.001	10.000	9.999	0.750	0.825
XP-500-10.000-500	Straight Lip	10.000	10.001	11.000	10.999	0.500	0.550
XP-500-11.000-500	Straight Lip	11.000	11.001	12.000	11.999	0.500	0.550
XP-500-12.500-750	Straight Lip	12.500	12.501	13.500	13.499	0.750	0.825
XP-500-13.250-500	Straight Lip	13.250	13.251	14.250	14.249	0.500	0.550
XP-500-15.000-500	Straight Lip	15.000	15.001	16.000	15.999	0.500	0.550
XP-500-15.000-750	Straight Lip	15.000	15.001	16.000	15.999	0.750	0.825
XP-500-17.500-750	Straight Lip	17.500	17.501	18.500	18.499	0.750	0.825
XP-500-18.000-500	Straight Lip	18.000	18.001	19.000	18.999	0.500	0.550
XP-500-21.000-500	Straight Lip	21.000	21.001	22.000	21.999	0.500	0.550
XP-500-22.000-500	Straight Lip	22.000	22.001	23.000	22.999	0.500	0.550
XP-500-22.500-750	Straight Lip	22.500	22.501	23.500	23.4999	0.750	0.825
XP-500-23.500-500	Straight Lip	23.500	23.501	24.500	24.499	0.500	0.550
XP-500-26.500-500	Straight Lip	26.500	26.501	27.500	27.499	0.500	0.550
XP-500-27.000-500	Straight Lip	27.000	27.001	28.000	27.999	0.500	0.550
XP-500-28.500-500	Straight Lip	28.500	28.501	29.500	29.499	0.500	0.550
XP-500-31.000-500	Straight Lip	31.000	31.001	32.000	31.999	0.500	0.550
XP-500-32.000-500	Straight Lip	32.000	32.001	33.000	32.999	0.500	0.550
XP-500-36.000-500	Straight Lip	36.000	36.001	37.000	36.999	0.500	0.550
XP-500-40.000-500	Straight Lip	40.000	40.001	41.000	40.999	0.500	0.550
.625" - C/S		h9	H9	H9	h9		+.010/-.000
XP-625-12.750-625	Straight Lip	12.750	12.751	14.000	13.999	0.625	0.688
XP-625-13.750-1000	Straight Lip	13.750	13.751	15.000	14.999	1.000	1.1
XP-625-24.000-625	Straight Lip	24.000	24.001	25.250	25.249	0.625	0.688
.750" - C/S		h9	H9	H9	h9		+.010/-.000
XP-750-08.500-750	Straight Lip	8.500	8.501	10.000	9.999	0.750	0.825
XP-750-09.500-750	Straight Lip	9.500	9.501	11.000	10.999	0.750	0.825
XP-750-10.500-750	Straight Lip	10.500	10.501	12.000	11.999	0.750	0.825
XP-750-14.000-750	Straight Lip	14.000	14.001	15.500	15.499	0.750	0.825

Surface Finish: ISO 4287 & Chamfer Information on pages 7-9.
For ISO tolerance charts, refer to pages 12-13.

Compound information available on pages 20-37.

XPYS Symmetrical (2 PC.) U-Cup

A product of MFP Seals.

MFPSEALS®
www.mfpseals.com

XPYS - SYMMETRICAL (2 PC.) U-CUP

MFP Seals' XPYS seal has a unique Nitrile Y-Ring Expander/U-Cup that loads a X-Pac® Straight-Lip base which acts as a secondary sealing lip. This X-Pac® base provides excellent stability in high pressure and low temperature, medium to heavy-duty applications. Typically used for Rod applications, the XPYS has excellent extrusion resistance and low compression set.

BASE COMPOUNDS	EXPANDER COMPOUNDS
U2162	N6001 (Standard 70 Duro NBR)
U2151	N6015 (Standard 80 Duro NBR)
U4150	N6021 (Low Temp 80 Duro HNBR)
H2155	N6022 (Low Temp 70 Duro NBR)
	N6023 (88 Duro HNBR)

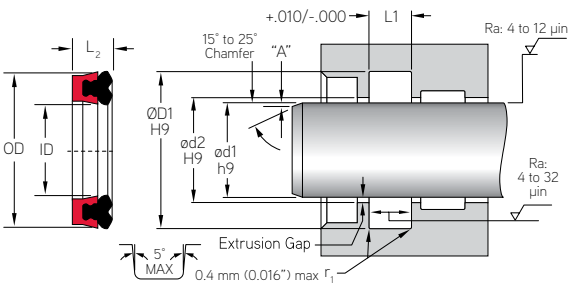

L2 dimension is for reference only. Please contact MFP Seals Engineering for assistance.

MFP PART NUMBER

XPYS-125-00.250-250U2151/N6001

SEAL TYPE | CROSS SECTION | ød1 | L2 | BASE COMPOUND | EXPANDER COMPOUND

Pressure: 400 bar (5,800 psi) **Max. Velocity:** 0.5 m/s (< 1.6 ft./s)

MFP PART NUMBER	ROD APPLICATION ød1	ød2	ØD1	L2	L1
.125" CROSS SECTION	h9	H9	H9	Reference*	+.010/-.000
XPYS-125-00.250-250	0.250	0.251	0.500	0.250	0.275
XPYS-125-00.375-250	0.375	0.376	0.625	0.250	0.275
XPYS-125-00.500-250	0.500	0.501	0.750	0.250	0.275
XPYS-125-00.750-187	0.750	0.751	1.000	0.187	0.206
XPYS-125-01.000-250	1.000	1.001	1.250	0.250	0.275
XPYS-125-01.250-250	1.250	1.251	1.500	0.250	0.275
.187" CROSS SECTION	h9	H9	H9	Reference*	+.010/-.000
XPYS-187-01.000-312	1.000	1.001	1.374	0.312	0.344
XPYS-187-01.250-312	1.250	1.251	1.624	0.312	0.344
XPYS-187-01.375-312	1.375	1.376	1.875	0.312	0.344
XPYS-187-01.500-312	1.500	1.501	1.875	0.312	0.344
XPYS-187-01.500-375	1.500	1.501	1.875	0.375	0.413
XPYS-187-01.625-312	1.625	1.626	2.000	0.312	0.344
XPYS-187-01.750-375	1.750	1.751	2.125	0.375	0.413
XPYS-187-02.000-312	2.000	2.001	2.375	0.312	0.344
XPYS-187-02.000-375	2.000	2.001	2.375	0.375	0.413
.250" CROSS SECTION	h9	H9	H9	Reference*	+.010/-.000
XPYS-250-01.375-375	1.375	1.376	1.875	0.375	0.413
XPYS-250-01.500-375	1.500	1.501	2.000	0.375	0.413
XPYS-250-01.500-562	1.500	1.501	2.000	0.562	0.619
XPYS-250-01.750-375	1.750	1.751	2.250	0.375	0.413
XPYS-250-02.000-375	2.000	2.001	2.500	0.375	0.413
XPYS-250-02.000-562	2.000	2.001	2.500	0.562	0.619
XPYS-250-02.250-375	2.250	2.251	2.750	0.375	0.413
XPYS-250-02.500-375	2.500	2.501	3.000	0.375	0.413
XPYS-250-02.500-562	2.500	2.501	3.000	0.562	0.619
XPYS-250-02.750-375	2.750	2.751	3.250	0.375	0.413

Compound information available on pages 20-37.

Surface Finish: ISO 4287 & Chamfer Information on pages 7-9.
For ISO tolerance charts, refer to pages 12-13.

MFPSEALS®
www.mfpseals.com

XPYS Symmetrical (2 PC.) U-Cup

A product of MFP Seals.

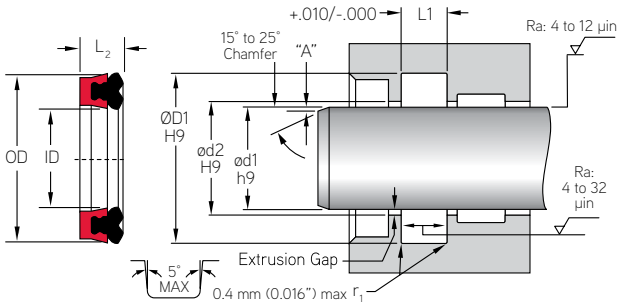

MFP PART NUMBER	ROD APPLICATION ød1	ød2	ØD1	L2	L1
.250" CROSS SECTION	h9	H9	H9	Reference*	+.010/-.000
XPYS-250-03.000-375	3.000	3.001	3.500	0.375	0.413
XPYS-250-03.000-562	3.000	3.001	3.500	0.562	0.619
XPYS-250-03.500-375	3.500	3.501	4.000	0.375	0.413
XPYS-250-04.000-375	4.000	4.001	4.500	0.375	0.413
XPYS-250-04.000-562	4.000	4.001	4.500	0.562	0.619
XPYS-250-04.500-375	4.500	4.501	5.000	0.375	0.413
XPYS-250-05.000-375	5.000	5.001	5.500	0.375	0.413
XPYS-250-05.000-562	5.000	5.001	5.500	0.562	0.619
XPYS-250-05.500-375	5.500	5.501	6.000	0.375	0.413
XPYS-250-05.500-562	5.500	5.501	6.000	0.562	0.619
XPYS-250-05.500-750	5.500	5.501	6.000	0.750	0.825
XPYS-250-06.000-562	6.000	6.001	6.500	0.562	0.619
XPYS-250-07.000-562	7.000	7.001	7.500	0.562	0.619
XPYS-250-08.000-562	8.000	8.001	8.500	0.562	0.619
.375" CROSS SECTION	h9	H9	H9	Reference*	+.010/-.000
XPYS-375-03.625-625	3.625	3.626	4.375	0.625	0.688
XPYS-375-05.000-625	5.000	5.001	5.750	0.625	0.688
XPYS-375-06.000-625	6.000	6.001	6.750	0.625	0.688
.500" CROSS SECTION	h9	H9	H9	Reference*	+.010/-.000
XPYS-500-07.000-750	7.000	7.001	8.000	0.750	0.825

Surface Finish: ISO 4287 & Chamfer Information on pages 7-9.
For ISO tolerance charts, refer to pages 12-13.

Compound information available on pages 20-37.

RTL - Asymmetrical Rod Seal U-Cup

A product of MFP Seals.

MFPSEALS
www.mfpseals.com

RTL ASYMMETRICAL ROD SEAL U-CUP

MFP Seals' RTL Rod Seal U-Cup is an asymmetrical design cup seal for use in hydraulic applications. The twin lip design offers increased seal stability while the knife-trimmed primary lip provides superior sealing ability. The design was enhanced using finite element analysis giving you the best product on the market. Produced from our U2151 compound, the seal offers extremely low compression set and excellent extrusion resistance.

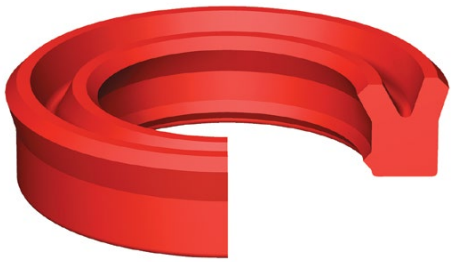

The standard compound for this seal is U2151. It is also available in compounds U2150, U4150, and H2155.

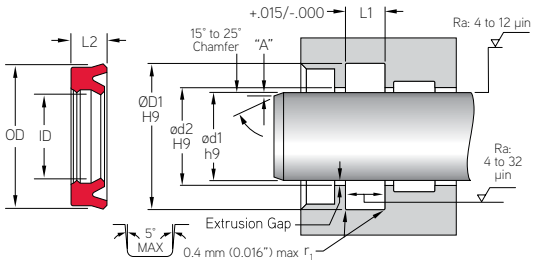

MFP PART NUMBER

RTL-125-00.625-187U2151

SEAL TYPE | C/S | ød1 | L2 | COMPOUND

Pressure: 400 bar (5,800 psi) **Max. Velocity:** 0.5 m/s (< 1.6 ft./s)

MAXIMUM EXTRUSION GAP RECOMMENDATION

MFP SERIES	ROD DIAMETER	GROOVE DIAMETER	GROOVE WIDTH	RADIAL CLEARANCE EXTRUSION GAP		
	ød1 h9	**ØD1** H9	**L1** +.015	2300psi	3600psi	5800psi
RTL-125	0.500 - 1.500	ød1 + .250	.206 - .275	0.008	0.004	-
RTL-156	0.187 - 1.375	ød1 + .312	0.24	0.011	0.006	-
RTL-187	1.000 - 4.000	ød1 + .375	.206 - .413	0.014	0.008	-
RTL-218	2.500 - 3.000	ød1 + .437	0.312	0.016	0.009	0.002
RTL-250	1.250 - 5.500	ød1 + .500	.275 - .618	0.018	0.010	0.004
RTL-312	3.000 - 5.500	ød1 + .625	.343 - .688	0.020	0.012	0.006
RTL-375	4.000 - 8.000	ød1 + .750	.550 - .688	0.020	0.012	0.006

NOTE: The above data are maximum values for extrusion gap.
Material type, pressure, temperature, speed and extrusion gap will affect extrusion resistance.
Maximum values, pressure, speed, temperature and extrusion gap should not be applied continuously nor simultaneously.

MFP PART NUMBER	ROD APPLICATION				
	ød1	**ød2**	**ØD1**	**L2**	**L1**
.125" CROSS SECTION	h9	H9	H9		+.015/-.000
RTL-125-00.500-187	0.500	0.501	0.750	0.187	0.206
RTL-125-00.625-187	0.625	0.626	0.875	0.187	0.206
RTL-125-00.625-250	0.625	0.626	0.875	0.250	0.275
RTL-125-00.750-125	0.750	0.751	1.000	0.125	0.275
RTL-125-00.750-250	0.750	0.751	1.000	0.250	0.275
RTL-125-00.875-250	0.875	0.876	1.125	0.250	0.275
RTL-125-01.000-250	1.000	1.001	1.250	0.250	0.275
RTL-125-01.125-250	1.125	1.126	1.375	0.250	0.275

Compound information available on pages 20-37.

Surface Finish: ISO 4287 & Chamfer Information on pages 7-9.
For ISO tolerance charts, refer to pages 12-13.

MFPSEALS®
www.mfpseals.com

RTL - Asymmetrical Rod Seal U-Cup

A product of MFP Seals.

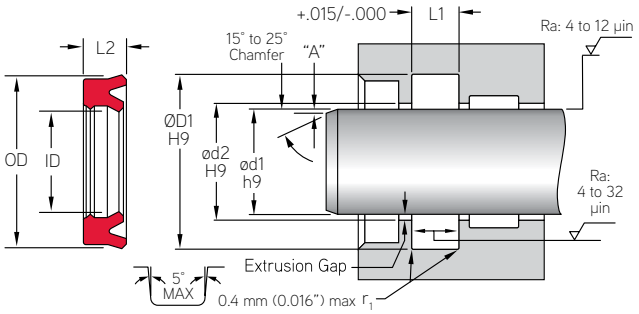

MFP PART NUMBER	ød1	ød2	ØD1	L2	L1
	ROD APPLICATION				
.125" CROSS SECTION	h9	H9	H9		+.015/-.000
RTL-125-01.250-250	1.250	1.251	1.500	0.250	0.275
RTL-125-01.375-250	1.375	1.376	1.625	0.250	0.275
RTL-125-01.500-250	1.500	1.501	1.750	0.250	0.275
.156" CROSS SECTION	h9	H9	H9		+.015/-.000
RTL-156.01.000-219	1.000	1.001	1.312	0.218	0.240
RTL-156.01.375-219	1.375	1.376	1.687	0.218	0.240
.187" CROSS SECTION	h9	H9	H9		+.015/-.000
RTL-187-00.187-312	0.187	0.188	0.562	0.312	0.343
RTL-187-01.000-187	1.000	1.001	1.375	0.187	0.206
RTL-187-01.000-312	1.000	1.001	1.375	0.312	0.343
RTL-187-01.125-312	1.125	1.126	1.500	0.312	0.343
RTL-187-01.250-187	1.250	1.251	1.625	0.187	0.206
RTL-187-01.250-250	1.250	1.251	1.625	0.250	0.275
RTL-187-01.250-312	1.250	1.251	1.625	0.312	0.343
RTL-187-01.250-375	1.250	1.251	1.625	0.375	0.413
RTL-187-01.312-312	1.312	1.313	1.687	0.312	0.343
RTL-187-01.375-187	1.375	1.376	1.750	0.187	0.206
RTL-187-01.375-312	1.375	1.376	1.750	0.312	0.343
RTL-187-01.500-250	1.500	1.501	1.875	0.250	0.275
RTL-187-01.500-312	1.500	1.501	1.875	0.312	0.343
RTL-187-01.500-375	1.500	1.501	1.875	0.375	0.413
RTL-187-01.625-312	1.625	1.626	2.000	0.312	0.343
RTL-187-01.750-250	1.750	1.751	2.125	0.250	0.275
RTL-187-01.750-312	1.750	1.751	2.125	0.312	0.343
RTL-187-01.750-375	1.750	1.751	2.125	0.375	0.413
RTL-187-02.000-250	2.000	2.001	2.375	0.250	0.275
RTL-187-02.000-312	2.000	2.001	2.375	0.312	0.343
RTL-187-02.000-375	2.000	2.001	2.375	0.375	0.413
RTL-187-02.125-312	2.125	2.126	2.500	0.312	0.343
RTL-187-02.250-335	2.250	2.251	2.625	0.250	0.275
RTL-187-02.250-375	2.250	2.251	2.625	0.375	0.413
RTL-187-02.500-375	2.500	2.501	2.875	0.375	0.413
RTL-187-02.625-312	2.625	2.626	3.000	0.312	0.343
RTL-187-02.625-375	2.625	2.626	3.000	0.375	0.413
RTL-187-02.750-312	2.750	2.751	3.125	0.312	0.343
RTL-187-02.750-375	2.750	2.751	3.125	0.375	0.413
RTL-187-03.000-375	3.000	3.001	3.375	0.375	0.413
RTL-187-03.375-312	3.375	3.376	3.750	0.312	0.343
RTL-187-03.500-375	3.500	3.501	3.875	0.375	0.413

Surface Finish: ISO 4287 & Chamfer Information on pages 7-9.
For ISO tolerance charts, refer to pages 12-13.

Compound information available on pages 20-37.

RTL - Asymmetrical Rod Seal U-Cup

A product of MFP Seals.

MFPSEALS®
www.mfpseals.com

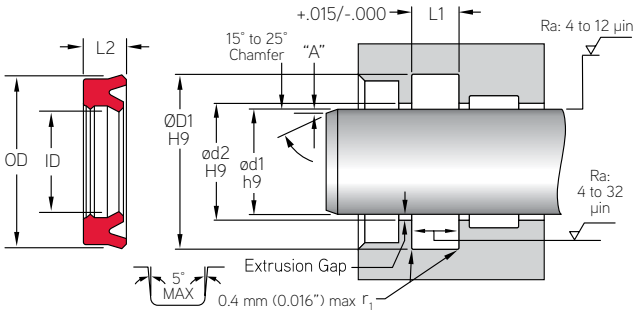

MFP PART NUMBER	ROD APPLICATION ød1	ød2	ØD1	L2	L1
.218" CROSS SECTION	h9	H9	H9		+.015/-.000
RTL-187-04.000-375	4.000	4.001	4.375	0.375	0.413
RTL-218-02.500-281	2.500	2.501	2.937	0.281	0.312
RTL-218-03.000-281	3.000	3.001	3.437	0.281	0.312
.250" CROSS SECTION	h9	H9	H9		+.015/-.000
RTL-250-01.250-375	1.250	1.251	1.750	0.375	0.413
RTL-250-01.375-375	1.375	1.376	1.875	0.375	0.413
RTL-250-01.500-250	1.500	1.501	2.000	0.250	0.275
RTL-250-01.500-375	1.500	1.501	2.000	0.375	0.413
RTL-250-01.750-250	1.750	1.751	2.250	0.250	0.275
RTL-250-01.750-375	1.750	1.751	2.250	0.375	0.413
RTL-250-01.875-375	1.875	1.876	2.375	0.375	0.413
RTL-250-02.000-250	2.000	2.001	2.500	0.250	0.275
RTL-250-02.000-375	2.000	2.001	2.500	0.375	0.413
RTL-250-02.250-375	2.250	2.251	2.750	0.375	0.413
RTL-250-02.375-375	2.375	2.376	2.875	0.375	0.413
RTL-250-02.500-375	2.500	2.501	3.000	0.375	0.413
RTL-250-02.750-375	2.750	2.751	3.250	0.375	0.413
RTL-250-03.000-375	3.000	3.001	3.500	0.375	0.413
RTL-250-03.375-375	3.375	3.376	3.875	0.375	0.413
RTL-250-03.500-312	3.500	3.501	4.000	0.312	0.343
RTL-250-03.500-375	3.500	3.501	4.000	0.375	0.413
RTL-250-04.000-330	4.000	4.001	4.500	0.330	0.362
RTL-250-04.000-375	4.000	4.001	4.500	0.375	0.413
RTL-250-04.500-375	4.500	4.501	5.000	0.375	0.413
RTL-250-04.500-562	4.500	4.501	5.000	0.562	0.618
RTL-250-04.750-562	4.750	4.751	5.250	0.562	0.618
RTL-250-05.000-375	5.000	5.001	5.500	0.375	0.413
RTL-250-05.000-562	5.000	5.001	5.500	0.562	0.618
RTL-250-05.500-375	5.500	5.501	6.000	0.375	0.413
RTL-250-05.500-562	5.500	5.501	6.000	0.562	0.618
.312" CROSS SECTION	h9	H9	H9		+.015/-.000
RTL-312-03.000-500	3.000	3.001	3.625	0.500	0.550
RTL-312-03.500-500	3.500	3.501	4.125	0.500	0.550
RTL-312-04.000-375	4.000	4.001	4.625	0.375	0.413
RTL-312-04.000-500	4.000	4.001	4.625	0.500	0.550
RTL-312-04.500-625	4.500	4.501	5.125	0.625	0.688
RTL-312-05.250-625	5.250	5.251	5.875	0.625	0.688
RTL-312-05.500-312	5.500	5.501	6.125	0.312	0.343

Compound information available on pages 20-37.

Surface Finish: ISO 4287 & Chamfer Information on pages 7-9.
For ISO tolerance charts, refer to pages 12-13.

MFPSEALS®
www.mfpseals.com

RTL - Asymmetrical Rod Seal U-Cup

A product of MFP Seals.

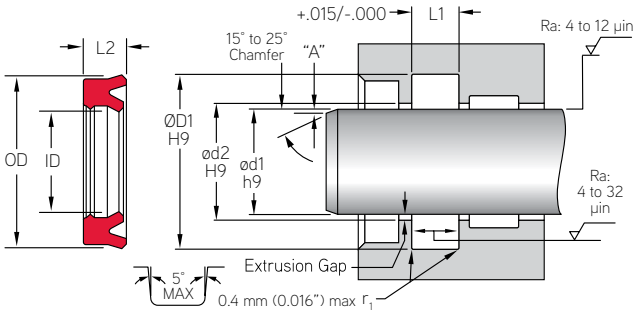

MFP PART NUMBER	ROD APPLICATION ød1	ød2	ØD1	L2	L1
.375" CROSS SECTION	h9	H9	H9		+.015/-.000
RTL-375-04.000-625	4.000	4.001	4.750	0.625	0.688
RTL-375-04.500-625	4.500	4.501	5.250	0.625	0.688
RTL-375-05.000-500	5.000	5.001	5.750	0.500	0.550
RTL-375-05.000-625	5.000	5.001	5.750	0.625	0.688
RTL-375-05.500-625	5.500	5.501	6.250	0.625	0.688
RTL-375-06.000-625	6.000	6.001	6.750	0.625	0.688
RTL-375-07.000-625	7.000	7.001	7.750	0.625	0.688
RTL-375-08.000-625	8.000	8.001	8.625	0.625	0.688

Surface Finish: ISO 4287 & Chamfer Information on pages 7-9.
For ISO tolerance charts, refer to pages 12-13.

Compound information available on pages 20-37.

MFPSEALS®
www.mfpseals.com

PTFE ENVELOPE GASKETS

Milled or Split, Ring and Full Face.

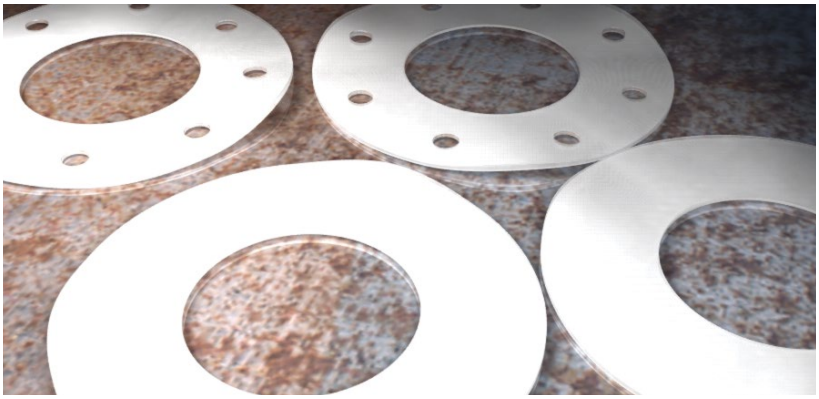

Protect Your System From Contamination!

MFP Seals manufactures both Ring and Full Face Envelope Gaskets from T1000 (Virgin PTFE) rod stock. Our envelopes are available in milled and slit styles. PTFE envelope gaskets are an effective means by which compression gasket materials are blocked from entering the system in food processing and chemical industries where contamination is not allowed.

At low bolt loads, our PTFE envelope gaskets provide an effective seal, are highly deformable, display excellent creep resistance and are resistant to solvents and corrosives. The gaskets are used in conjunction with a wide range of filler materials, designed to exceed the specifications of your application.

Milled Style

Slit Style

MFP Seals' Milled Envelope Gaskets feature a square shoulder I.D., allowing unrestricted flow in the pipe flange. The envelope is milled from the O.D. to approx. 1/32" of the inner diameter. By machining the inner cut, gasket filler materials fit more precisely.

Available in a wide range of sizes, the Slit Style Envelope Gasket is a more popular design, and are available in a wide range of sizes. The PTFE disk is split, creating two flaps of PTFE material, while maintaining a connection at the inner diameter (I.D.). This forms an envelope for the filler gasket. Because of the way it is made, greater clearance is necessary between the I.D. of the filler material and the envelope's ID, (as compared to a milled envelope gasket).

Material Facts
T1000 (Virgin PTFE)

Properties	Method	Typical Value
PHYSICAL - MECHANICAL		
Density (g/cm³)	ASTM D792	2.14 - 2.18
Hardness Shore D (points)	ASTM D2240	51 - 60
Tensile Strength CD (MPa)	ISO 527	≥ 20
Elongation at Break CD (%)	ISO 527	>200
Compressive Strength at 1% deformation CD (psi)	ASTM D695	580 - 725
Deformation under load at room temp. after 24 hours at 13.7 N/mm² CD (%)	ASTM D621	14 - 17
Permanent deformation as above after 24 hours of rest at room temp. CD (%)	ASTM D621	7 - 8
Permanent deformation as above after 24 hours of rest at room temp. CD (%)	ASTM D621	7 - 8
Impact strength Izod (J/m)	ASTM D256	153
TRIBIOLOGICAL		
Dynamic Coefficient of Friction	ASTM D1894 ASTM D3702	0.06
Wear factor K	ASTM D3702	2.900
PV limit at 3 m/min	N/mm²· m/min	2.4
at 30 m/min		4.2
at 300 m/min		5.7
THERMAL		
Service Temperature (min to max)	°C	-200 to +260
	°F	-328 to +500
Thermal expansion coefficient (linear) 25 - 100°C (10-5in/in/°F)	ASTM D696	6.625 - 7.206
ELECTRICAL		
Dielectric Strength (specimen 0.5 mm thick) (KV/mm)	ASTM D149	≥ 40
Dielectric Constant at 60 Hz and 106 Hz	ASTM D150	2.05 - 2.10
Volume Resistivity (Ω · cm)	ASTM D257	1018
Surface Resistivity (Ω)	ASTM D257	1017

CD = Cross Direction

The data we are herewith providing are all based on laboratory testing and are proposed to technical designers as possible and useful advice. Deviations from the values indicated may occur, but they do not constitute themselves either detriment of quality or reason for rejection.

PROMOTIONAL MEDIA

Give MFP Seals a call and order your T1000 PTFE Envelope Gaskets today!

MFPSEALS®
www.mfpseals.com

RU - Asymmetrical Rod Seal U-Cup

A product of MFP Seals.

RU ASYMMETRICAL ROD SEAL U-CUP

MFP Seals' RU Rod Seal U-Cup is an asymmetrical design cup seal for use in hydraulic applications. The knife-trimmed primary lip provides superior sealing ability. The design was enhanced using finite element analysis giving you the best product on the market.

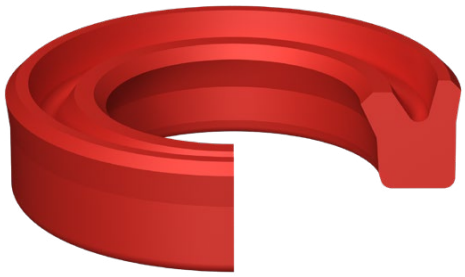

The standard compound for this seal is U2151. It is also available in compounds: U2150, U2162, U4150, and H2155.

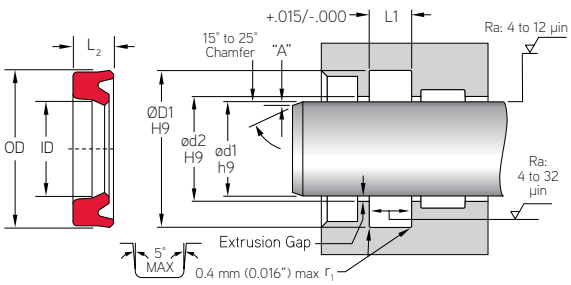

MFP PART NUMBER

RU-125-01.312-187U2151

SEAL TYPE | CROSS SECTION | ød1 | L2 | COMPOUND

Pressure:	Max. Velocity:

MFP PART NUMBER	ROD APPLICATION				
	ød1	ød2	ØD1	L1	L2
.125" C/S	h9	H9	H9	+.010/-.000	
RU-125-01.312-187	0.312	0.313	0.562	0.207	0.187
RU-156-00.750-250	0.750	0.751	1.062	0.275	0.250
RU-187-00.875-312	0.875	0.876	1.250	0.344	0.312
RU-187-01.000-312	1.000	1.001	1.375	0.344	0.312

Surface Finish: ISO 4287 & Chamfer Information on pages 7-9.
For ISO tolerance charts, refer to pages 12-13.

Compound information available on pages 20-37.

SRS - Serrated Rod Seal U-Cup

A product of MFP Seals.

MFPSEALS®
www.mfpseals.com

SRS SERRATED ROD SEAL U-CUP

MFP Seals' SRS Rod Seal U-Cup is an asymmetrical design cup seal for use in hydraulic applications. The SRS features a serrated rod wiping surface for maximum surface contact with minimal resistance. The design was enhanced using finite element analysis giving you the best product on the market.

The standard compound for this seal is U2162. It is also available in U2150, U2151, and U4150.

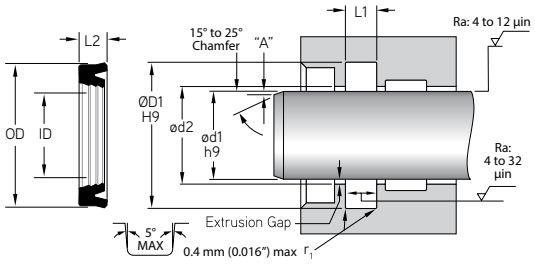

MFP PART NUMBER

SRS-187-01.750-218U2162

SEAL TYPE | C/S | ød1 | L1 | COMPOUND

Pressure: 350 bar (5,000 psi) **Max. Velocity:** 0.5 m/s (< 1.6 ft./s)

	ROD APPLICATION			
MFP PART NUMBER	**ød1**	**ØD1**	**L2**	**L1**
TOLERANCE	h9	H9		+.010/-.000
SRS-125-00.500-209	0.500	0.750	0.209	0.230
SRS-125-00.625-170	0.625	0.875	0.170	0.187
SRS-125-00.625-209	0.625	0.875	0.209	0.230
SRS-125-01.000-250	1.000	1.250	0.250	0.275
SRS-156-01.000-232	1.000	1.312	0.232	0.250
SRS-156-01.375-232	1.375	1.687	0.232	0.250
SRS-187-01.375-312	1.375	1.750	0.312	0.344
SRS-187-01.750-272	1.750	2.125	0.272	0.281
SRS-187-01.750-380	1.750	2.125	0.380	0.410
SRS-187-02.000-272	2.000	2.375	0.272	0.281
SRS-187-02.000-380	2.000	2.375	0.380	0.410
SRS-187-02.500-380	2.500	2.875	0.380	0.410
SRS-218-02.500-290	2.500	2.938	0.290	0.312
SRS-187-03.000-380	3.000	3.375	0.380	0.410
SRS-218-03.000-290	3.000	3.438	0.290	0.312
SRS-187-03.500-380	3.500	3.875	0.380	0.410
SRS-250-03.500-327	3.500	4.000	0.327	0.355
SRS-187-04.000-380	4.000	4.375	0.380	0.410
SRS-250-04.000-327	4.000	4.500	0.327	0.355
SRS-250-04.500-327	4.500	5.000	0.327	0.355
SRS-281-05.000-352	5.000	5.562	0.352	0.390
SRS-312-05.500-380	5.500	6.125	0.380	0.410

Compound information available on pages 20-37.

Surface Finish: ISO 4287 & Chamfer Information on pages 7-9.
For ISO tolerance charts, refer to pages 12-13.

MFPSEALS®
www.mfpseals.com

XPAR - X-PAC® Loaded Rod Seal U-Cup with Anti-Extrusion Ring

A product of MFP Seals.

XPAR - X-PAC® LOADED U-CUP WITH ANTI-EXTRUSION RING

XPAR B-Lip X-PAC® U-Cup is a versatile reciprocating seal for linear rod applications, up to 400 bar (5,800 psi). The rubber expander creates a compression style seal while still operating as a pressure actuated U-Cup design. The result is better low-pressure sealing and less startup leakage. The XPAR X-PAC® has an Anti-Extrusion Ring to prevent seal extrusion. MFP Seals' X-PAC® U-Cups feature a knife trimmed sealing lip for increased sealability.

The standard compound for this seal is U2151, with an N6014 Expander and M1001 Anti-Extrusion Ring.

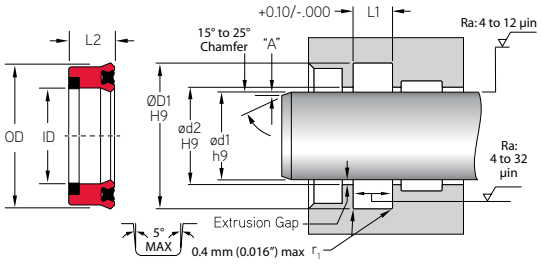

MFP PART NUMBER

XPAR-187-01.000-375BU2151

SEAL TYPE | CROSS SECTION | ød1 | L2 | PROFILE STYLE | COMPOUND

Pressure: 400 bar (5,800 psi) **Max. Velocity:** 0.5 m/s (< 1.6 ft./s)

MFP BASE PART NUMBER	PROFILE STYLE	ROD APPLICATION ød1	ød2	ØD1	L1	L2
.187" - CROSS SECTION WIDTH		h9	H9	H9	+.010/-.000	
XPAR-187-01.000-375B	B Lip	1.000	1.001	1.375	0.413	0.375
XPAR-187-01.250-375B	B Lip	1.250	1.251	1.625	0.413	0.375
XPAR-187-01.375-375B	B Lip	1.375	1.376	1.750	0.413	0.375
XPAR-187-01.500-375B	B Lip	1.500	1.501	1.875	0.413	0.375
XPAR-187-01.750-375B	B Lip	1.750	1.751	2.125	0.413	0.375
XPAR-187-02.000-375B	B Lip	2.000	2.001	2.375	0.413	0.375
XPAR-187-02.250-375B	B Lip	2.250	2.251	2.625	0.413	0.375
XPAR-187-02.375-375B	B Lip	2.375	2.376	2.750	0.413	0.375
XPAR-187-02.500-375B	B Lip	2.500	2.501	2.875	0.413	0.375
.250" - CROSS SECTION WIDTH		h9	H9	H9	+.010/-.000	
XPAR-250-01.500-375B	B Lip	1.500	1.501	2.000	0.413	0.375
XPAR-250-01.750-375B	B Lip	1.750	1.751	2.250	0.413	0.375
XPAR-250-02.000-375B	B Lip	2.000	2.001	2.500	0.413	0.375
XPAR-250-02.250-375B	B Lip	2.250	2.251	2.750	0.413	0.375
XPAR-250-02.500-375B	B Lip	2.500	2.501	3.000	0.413	0.375
XPAR-250-02.750-375B	B Lip	2.750	2.751	3.250	0.413	0.375
XPAR-250-03.000-375B	B Lip	3.000	3.001	3.500	0.413	0.375
XPAR-250-03.250-375B	B Lip	3.250	3.251	3.750	0.413	0.375
XPAR-250-03.500-375B	B Lip	3.500	3.501	4.000	0.413	0.375
XPAR-250-03.750-375B	B Lip	3.750	3.751	4.250	0.413	0.375
XPAR-250-04.000-375B	B Lip	4.000	4.001	4.500	0.413	0.375

Surface Finish: ISO 4287 & Chamfer Information on pages 7-9.
For ISO tolerance charts, refer to pages 12-13.

Compound information available on pages 20-37.

XPR - X-PAC® Loaded Rod Seal U-Cup, Twin-Lip

A product of MFP Seals.

MFPSEALS®
www.mfpseals.com

XPR - X-PAC® LOADED B-LIP, TWIN-LIP, SYMMETRICAL U-CUP

XPR B-Lip X-PAC® U-Cup is a versatile reciprocating seal for linear rod applications, up to 400 bar (5,800 psi). The rubber expander creates a compression style seal while still operating as a pressure actuated U-Cup design. The result is better low-pressure sealing and less startup leakage. The XPR X-PAC® features a Twin-Lip design which offers increased seal stability and superior sealing ability. MFP Seals' X-PAC® U-Cups feature a knife trimmed sealing lip for increased sealing ability.

The standard compound for this seal is U2151, with an N6014 X-Ring Expander. It is also available in compounds U2150, U4150, and H2155.

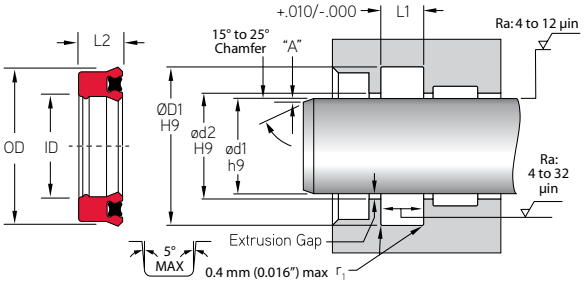

MFP PART NUMBER

XPR-125-00.750-187BU2151

SEAL TYPE | CROSS SECTION | ød1 | L2 | PROFILE STYLE | COMPOUND

Pressure: 400 bar (5,800 psi) **Max. Velocity:** 0.5 m/s (< 1.6 ft./s)

MFP PART NUMBER	ROD APPLICATION				
	ød1	ød2	ØD1	L1	L2
.125" C/S	h9	H9	H9	+.010/-.000	+.015/-.000
XPR-125-00.750-187B	0.750	0.751	1.000	0.207	0.187
XPR-125-00.750-250B	0.750	0.751	1.000	0.275	0.250
XPR-125-00.875-250B	0.875	0.876	1.125	0.275	0.250
XPR-125-01.000-250B	1.000	1.001	1.250	0.275	0.250
XPR-125-01.250-250B	1.250	1.251	1.500	0.275	0.250
XPR-125-01.500-250B	1.500	1.501	1.750	0.275	0.250
.187" C/S	h9	H9	H9	+.010/-.000	+.015/-.000
XPR-187-01.000-287B	1.000	1.001	1.375	0.316	0.287
XPR-187-01.250-312B	1.250	1.251	1.625	0.344	0.312
XPR-187-01.500-375B	1.500	1.501	1.875	0.413	0.375
XPR-187-01.750-375B	1.750	1.751	2.125	0.413	0.375
.2507" C/S	h9	H9	H9	+.010/-.000	+.015/-.000
XPR-250-01.125-250B	1.125	1.126	1.625	0.275	0.250
XPR-250-01.750-375B	1.750	1.751	2.250	0.413	0.375
XPR-250-02.000-375B	2.000	2.001	2.500	0.413	0.375
XPR-250-02.250-375B	2.250	2.251	2.750	0.413	0.375
XPR-250-02.500-375B	2.500	2.501	3.000	0.413	0.375
XPR-250-02.750-375B	2.750	2.751	3.250	0.413	0.375

Compound information available on pages 20-37.

Surface Finish: ISO 4287 & Chamfer Information on pages 7-9.
For ISO tolerance charts, refer to pages 12-13.

MFPSEALS
www.mfpseals.com

XPRA - X-PAC® Loaded B-Lip Rod Seal U-Cup with Twin-Lip & Anti-Extrusion Ring

A product of MFP Seals.

XPRA - X-PAC® LOADED B-LIP U-CUP WITH ANTI-EXTRUSION RING

XPRA B-Lip X-PAC® U-Cup is a versatile reciprocating seal for linear rod applications, up to 690 bar (10,000 psi). The rubber expander creates a compression style seal while still operating as a pressure actuated U-Cup design. The result is enhanced low pressure sealing. The XPRA X-PAC® offers Twin-Lip design for seal stability as well as an Anti-Extrusion Ring to assist with side loads and stop extrusion under extreme pressure spikes. MFP Seals' X-PAC® U-Cups feature a knife trimmed sealing lip for increased sealability.

The standard compound for this seal is U2151, with an N6014 X-Ring Expander, and M1000 Anti-Extrusion Ring. It is also available in compounds U2150, U4150, and H2155. An M1001 Anti-Extrusion Ring is also available.

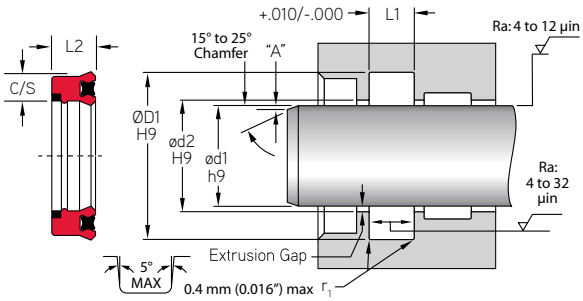

MFP PART NUMBER

XPRA-187-01.500-312BU2151

SEAL TYPE | CROSS SECTION | ød1 | L2 | PROFILE STYLE | COMPOUND

Pressure: 690 bar (10,000 psi)* **Max. Velocity:** 0.5 m/s (< 1.6 ft./s)

*With proper gap and guide elements, contact MFP Seals Engineering Department for gland design assistance.

MAXIMUM EXTRUSION GAP RECOMMENDATION

MFP SERIES	ROD DIAMETER	GROOVE DIAMETER	GROOVE WIDTH	RADIAL CLEARANCE EXTRUSION GAP			
	ød1 h9	**ØD1** H9	**L1** +.010	2300psi	3600psi	5800psi	10000psi
XPRA-187	1.500 - 2.000	ød1 + .375	.312 - .375	0.020	0.012	0.008	0.005
XPRA-250	1.750 - 3.500	ød1 + .500	0.375	0.025	0.018	0.012	0.007
XPRA-312	3.000 - 3.500	ød1 + .625	0.500	0.035	0.028	0.016	0.010
XPRA-375	3.000	ød1 + .750	0.625	0.035	0.028	0.016	0.010

NOTE: The above data are maximum values for extrusion gap.
Material type, pressure, temperature, speed and extrusion gap will affect extrusion resistance.
Maximum values, pressure, speed, temperature and extrusion gap should not be applied continuously nor simultaneously.

MFP PART NUMBER	NOMINAL SIZE			ACTUAL SIZE - ROD OR PISTON APPLICATION				
	ID	OD	HT	ød1	ød2	ØD1	L1	L2
.187" - C/S				h9	H9	H9	+.010/-.000	
XPRA-187-01.250-250B	1 1/4	1 5/8	1/4	1.125	1.126	1.625	0.275	0.250
XPRA-187-01.500-250B	1 1/2	1 7/8	1/4	1.500	1.501	1.875	0.275	0.250
XPRA-187-01.500-312B	1 1/2	1 7/8	5/16	1.500	1.501	1.875	0.344	0.312
XPRA-187-01.750-375B	1 3/4	2 1/8	3/8	1.750	1.751	2.125	0.413	0.375
XPRA-187-02.000-375B	2	1 7/8	3/8	2.000	2.001	2.375	0.413	0.375

Surface Finish: ISO 4287 & Chamfer Information on pages 7-9.
For ISO tolerance charts, refer to pages 12-13.

Compound information available on pages 20-37.

XPRA - X-PAC® Loaded B-Lip Rod Seal U-Cup with Twin-Lip & Anti-Extrusion Ring

A product of MFP Seals.

MFPSEALS®
www.mfpseals.com

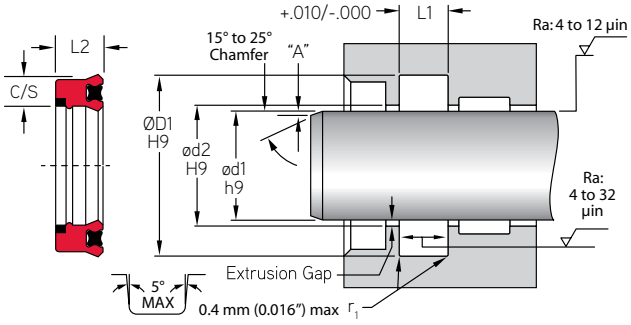

MFP PART NUMBER	NOMINAL SIZE ID	OD	HT	ACTUAL SIZE - ROD OR PISTON APPLICATION ød1	ød2	ØD1	L1	L2
.250" - C/S				h9	H9	H9	+.010/-.000	
XPRA-250-01.500-375B	1 1/2	2	3/8	1.500	1.501	2.000	0.413	0.375
XPRA-250-01.750-375B	1 3/4	2 1/4	3/8	1.750	1.751	2.250	0.413	0.375
XPRA-250-02.000-375B	2	2 1/2	3/8	2.000	2.001	2.500	0.413	0.375
XPRA-250-02.250-375B	2 1/4	2 3/4	3/8	2.250	2.251	2.750	0.413	0.375
XPRA-250-02.500-375B	2 1/2	3	3/8	2.500	2.501	3.000	0.413	0.375
XPRA-250-02.750-375B	2 3/4	3 1/4	3/8	2.750	2.751	3.250	0.413	0.375
XPRA-250-03.000-375B	3	3 1/2	3/8	3.000	3.001	3.500	0.413	0.375
XPRA-250-03.500-375B	3 1/2	4	3/8	3.500	3.501	4.000	0.413	0.375
XPRA-250-03.625-375B	3 5/8	4 1/8	3/8	3.625	3.626	4.125	0.413	0.375
XPRA-250-04.000-375B	4	4 1/2	3/8	4.000	4.001	4.500	0.413	0.375
XPRA-250-04.000-562B	4	4 1/2	9/16	4.000	4.001	4.500	0.619	0.562
XPRA-250-05.000-562B	5	5 1/2	9/16	5.000	5.001	5.500	0.619	0.562
.312" - C/S				h9	H9	H9	+.010/-.000	
XPRA-312-02.500-500B	2 1/2	3 1/8	1/2	2.500	2.501	3.125	0.550	0.500
XPRA-312-03.000-500B	3	3 5/8	1/2	3.000	3.001	3.625	0.550	0.500
XPRA-312-03.500-500B	3 1/2	3 1/8	1/2	3.500	3.501	4.125	0.550	0.500
XPRA-312-04.000-562B	4	4 5/8	9/16	4.000	4.001	4.625	0.619	0.562
XPRA-312-04.500-625B	4 1/2	5 1/8	9/16	4.500	4.501	5.125	0.688	0.625
.375" - C/S				h9	H9	H9	+.010/-.000	
XPRA-375-03.000-625B	3	3 3/4	5/8	3.000	3.001	3.750	0.688	0.625

Other sizes are available, but may require tooling and additional lead times.

Contact the MFP Seals' Engineering Department for more information.

**10,000 psi achieved with max E-gap of .006", contact MFP Engineering for E-Gap information and Gland Design Assistance.*

Compound information available on pages 20-37.

Surface Finish: ISO 4287 & Chamfer Information on pages 7-9.
For ISO tolerance charts, refer to pages 12-13.

MFPSEALS®
www.mfpseals.com

PUC - Asymmetrical Piston U-Cup

A product of MFP Seals.

PUC - ASYMMETRICAL PISTON U-CUP

MFP Seals' PUC Asymmetrical Piston U-Cup is designed for linear piston applications. The PUC features a knife trimmed sealing lip for increased sealing ability. The design was enhanced using finite element analysis giving you the best product on the market. Produced from our U2151 compound the seal offers extremely low compression set and excellent extrusion resistance.

The standard compound for this seal is U2151. It is also available in compounds: U2145, U2150, U2162, U4150 and H2155.

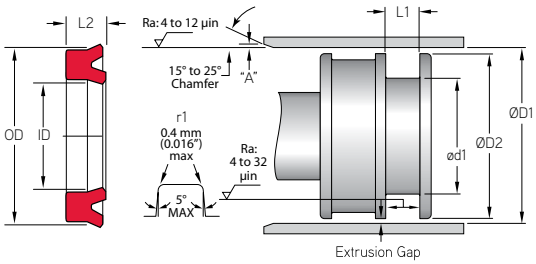

MFP PART NUMBER

PUC-2000x1500-375U2151

SEAL TYPE | ØD1 | ød1 | L2 | COMPOUND

Pressure: 400 bar (5,800 psi) **Max. Velocity:** 0.5 m/s (< 1.6 ft./s)

	PISTON APPLICATION			
MFP PART NUMBER	**ØD1**	**ød1**	**L2**	**L1**
TOLERANCE	h9	H9		+.010/-.000
PUC-0750X0375X312	0.750	0.375	0.312	0.343
PUC-1125X0750X312	1.125	0.750	0.312	0.343
PUC-1187X0812X250	1.187	0.812	0.250	0.275
PUC-1187X0812X312	1.187	0.812	0.312	0.343
PUC-1500X1125X250	1.500	1.125	0.250	0.275
PUC-1500X1187X156	1.500	1.187	0.156	0.206
PUC-1500X1250X250	1.500	1.250	0.250	0.275
PUC-1625X1125X312	1.625	1.125	0.312	0.343
PUC-1750X1500X250	1.750	1.500	0.250	0.275
PUC-2000X1375X500	2.000	1.375	0.500	0.550
PUC-2000X1500X375	2.000	1.500	0.375	0.413
PUC-2000X1625X187	2.000	1.625	0.187	0.207
PUC-2000X1625X312	2.000	1.625	0.312	0.343
PUC-2000X1625X375	2.000	1.625	0.375	0.413
PUC-2250X1750X375	2.250	1.750	0.375	0.413
PUC-2250X1875X375	2.250	1.875	0.375	0.413
PUC-2265X1625X375	2.265	1.625	0.375	0.413
PUC-2500X1625X500	2.500	1.625	0.500	0.550
PUC-2500X1875X500	2.500	1.875	0.500	0.550
PUC-2500X2000X250	2.500	2.000	0.250	0.275
PUC-2500X2000X375	2.500	2.000	0.375	0.413

Surface Finish: ISO 4287 & Chamfer Information on pages 7-9.
For ISO tolerance charts, refer to pages 12-13.

Compound information available on pages 20-37.

PUC - Asymmetrical Piston U-Cup

A product of MFP Seals.

MFPSEALS®
www.mfpseals.com

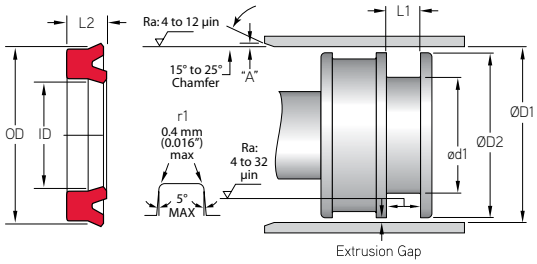

MFP PART NUMBER	PISTON APPLICATION ØD1	ød1	L2	L1
TOLERANCE	h9	H9		+.010/-.000
PUC-2500X2125X187	2.500	2.125	0.187	0.206
PUC-2500X2125X250	2.500	2.125	0.250	0.275
PUC-2500X2125X312	2.500	2.125	0.312	0.343
PUC-2500X2125X375	2.500	2.125	0.375	0.413
PUC-3000X2250X455	3.000	2.250	0.455	0.500
PUC-3000X2375X500	3.000	2.375	0.500	0.550
PUC-3000X2500X250	3.000	2.500	0.250	0.275
PUC-3000X2500X375	3.000	2.500	0.375	0.413
PUC-3000X2625X375	3.000	2.625	0.375	0.413
PUC-3250X2468X437	3.250	2.468	0.437	0.481
PUC-3250X2625X500	3.250	2.625	0.500	0.550
PUC-3250X2750X250	3.250	2.750	0.250	0.275
PUC-3250X2750X375	3.250	2.750	0.375	0.413
PUC-3250X2812X218	3.250	2.812	0.218	0.241
PUC-3250X2875X250	3.250	2.875	0.250	0.275
PUC-3500X2750X500	3.500	2.750	0.500	0.550
PUC-3500X2750X625	3.500	2.750	0.625	0.688
PUC-3500X2875X312	3.500	2.875	0.312	0.343
PUC-3500X2875X500	3.500	2.875	0.500	0.550
PUC-3500X3000X250	3.500	3.000	0.250	0.275
PUC-3500X3000X375	3.500	3.000	0.375	0.413
PUC-3500X3125X375	3.500	3.125	0.375	0.413
PUC-3750X3000X500	3.750	3.000	0.500	0.550
PUC-3750X3250X375	3.750	3.250	0.375	0.413
PUC-4000X3000X500	4.000	3.000	0.500	0.550
PUC-4000X3250X375	4.000	3.250	0.375	0.413
PUC-4000X3250X500	4.000	3.250	0.500	0.550
PUC-4000X3250X625	4.000	3.250	0.625	0.688
PUC-4000X3375X500	4.000	3.375	0.500	0.550
PUC-4000X3500X250	4.000	3.500	0.250	0.275
PUC-4000X3500X312	4.000	3.500	0.312	0.343
PUC-4000X3500X375	4.000	3.500	0.375	0.413
PUC-4000X3625X375	4.000	3.625	0.375	0.413
PUC-4250X3750X375	4.250	3.750	0.375	0.413
PUC-4500X4000X250	4.500	4.000	0.250	0.275
PUC-4500X4000X375	4.500	4.000	0.375	0.413

Compound information available on pages 20-37.

Surface Finish: ISO 4287 & Chamfer Information on pages 7-9.
For ISO tolerance charts, refer to pages 12-13.

MFPSEALS®
www.mfpseals.com

PUC - Asymmetrical Piston U-Cup

A product of MFP Seals.

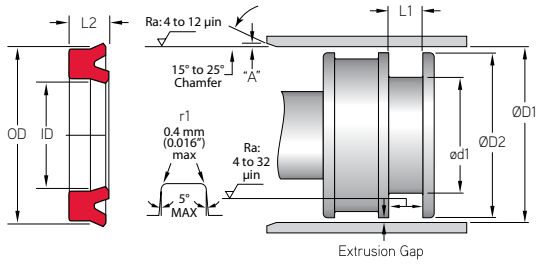

MFP PART NUMBER	PISTON APPLICATION ØD1	ød1	L2	L1
TOLERANCE	h9	H9		+.010/-.000
PUC-5000X4500X375	5.000	4.500	0.375	0.413
PUC-4500X4750X625	4.500	4.750	0.625	0.688
PUC-4750X4379X275	4.750	4.379	0.275	0.275
PUC-5000X4250X375	5.000	4.250	0.375	0.413
PUC-5000X4250X500	5.000	4.250	0.500	0.550
PUC-5000X4250X625	5.000	4.250	0.625	0.688
PUC-5000X4500X250	5.000	4.500	0.250	0.275
PUC-5000X4500X375	5.000	4.500	0.375	0.413
PUC-5000X4500X562	5.000	4.500	0.562	0.618
PUC-5250X4500X500	5.250	4.500	0.500	0.550
PUC-5500X4750X625	5.500	4.750	0.625	0.688
PUC-5750X5250X375	5.750	5.250	0.375	0.413
PUC-6000X5250X375	6.000	5.250	0.375	0.413
PUC-6000X5250X500	6.000	5.250	0.500	0.550
PUC-6000X5250X625	6.000	5.250	0.625	0.688
PUC-6000X5437X281	6.000	5.437	0.281	0.309
PUC-6000X5500X250	6.000	5.500	0.250	0.275
PUC-6000X5500X375	6.000	5.500	0.375	0.413
PUC-6000X5500X562	6.000	5.500	0.562	0.618
PUC-6250X5750X562	6.250	5.750	0.562	0.618
PUC-6500X6000X375	6.500	6.000	0.375	0.413
PUC-7000X6250X375	7.000	6.250	0.375	0.413
PUC-7000X6250X500	7.000	6.250	0.500	0.550
PUC-7000X6250X625	7.000	6.250	0.625	0.688
PUC-7000X6500X250	7.000	6.500	0.250	0.275
PUC-7000X6500X375	7.000	6.500	0.375	0.413
PUC-8000X7250X625	8.000	7.250	0.625	0.688
PUC-8000X7500X250	8.000	7.500	0.250	0.275
PUC-8000X7500X375	8.000	7.500	0.375	0.413
PUC-8750X8250X375	8.750	8.250	0.375	0.413
PUC-9000X8000X750	9.000	8.000	0.750	0.825
PUC-9500X9000X375	9.500	9.000	0.375	0.413

Surface Finish: ISO 4287 & Chamfer Information on pages 7-9.
For ISO tolerance charts, refer to pages 12-13.

Compound information available on pages 20-37.

PUE - Asymmetrical Piston U-Cup with Anti-Extrusion Ring

A product of MFP Seals.

MFPSEALS
www.mfpseals.com

PUE - ASYMMETRICAL PISTON U-CUP WITH ANTI-EXTRUSION RING

MFP Seals' PUE Asymmetrical Piston U-Cup with Anti-Extrusion Ring is designed for linear piston applications. The PUE features a knife trimmed sealing lip for increased sealing ability. The design was enhanced using finite element analysis giving you the best product on the market. Produced from our U2151 compound the seal offers extremely low compression set and excellent extrusion resistance.

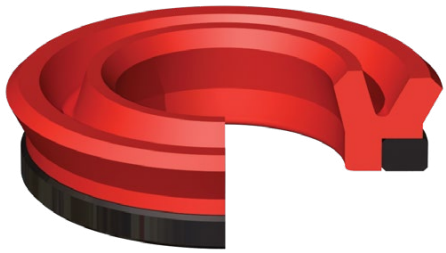

The standard compound for this seal is U2151 with an M1001 Anti-Extrusion Ring. It is also available in compounds U2150, U2162, U4150 and H2155.

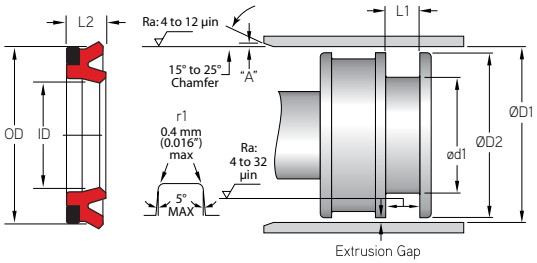

MFP PART NUMBER

PUE-3000X2500X375U2151

SEAL TYPE | ØD1 | ød1 | L2 | COMPOUND

Pressure: 400 bar (5,800 psi) **Max. Velocity:** 0.5 m/s (< 1.6 ft./s)

This seal may handle pressures in excess of 400 bar (5,800 psi) - Contact MFP Seals to discuss specific applications.

	PISTON APPLICATION			
MFP PART NUMBER	ØD1	ød1	L2	L1
TOLERANCE	h9	H9		+.010/-.000
PUE-3000X2500X375	3.000	2.500	0.375	0.413
PUE-3500X3000X375	3.500	3.000	0.375	0.413
PUE-4000X3500X375	4.000	3.500	0.375	0.413

Compound information available on pages 20-37.

Surface Finish: ISO 4287 & Chamfer Information on pages 7-9.
For ISO tolerance charts, refer to pages 12-13.

MFPSEALS®
www.mfpseals.com

PCD - Double Acting Piston Cup

A product of MFP Seals.

PCD - DOUBLE ACTING PISTON CUP

Single unit, double cup. Piston type packing replaces multi-part assemblies. Homogeneous rubber is bonded to a metal disc, only one part required - the most practical piston cup available for pneumatic or low pressure hydraulics.

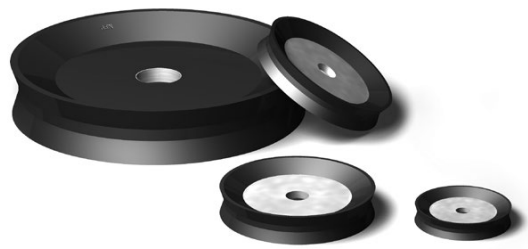

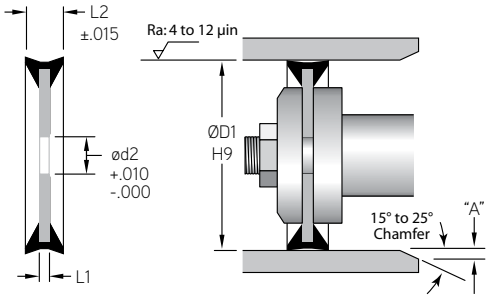

MFP PART NUMBER

PCD-150N8097

SEAL TYPE — ØD1 — COMPOUND

N8097 / Carbon Steel

	PISTON APPLICATION			
MFP PART NUMBER	**ØD1**	**ød2**	**L1**	**L2**
TOLERANCE	H9	+.010/-.000		+.015/-.015
PCD-100	1.000	0.250	0.093	0.375
PCD-112	1.125	0.250	0.093	0.500
PCD-118	1.250	0.250	0.093	0.500
PCD-125	1.250	0.250	0.093	0.500
PCD-137	1.375	0.250	0.093	0.500
PCD-150	1.500	0.250	0.093	0.500
PCD-175	1.750	0.250	0.093	0.500
PCD-200	2.000	0.375	0.125	0.563
PCD-225	2.250	0.375	0.125	0.563
PCD-250	2.500	0.375	0.125	0.563
PCD-300	3.000	0.500	0.125	0.563
PCD-325	3.250	0.500	0.125	0.625
PCD-350	3.500	0.500	0.188	0.750
PCD-400	4.000	0.500	0.188	0.750
PCD-425	4.250	0.500	0.188	0.750
PCD-450	4.500	0.750	0.188	0.750
PCD-500	5.000	0.750	0.250	0.937
PCD-550	5.500	0.750	0.250	0.937
PCD-600	6.000	0.750	0.250	0.937
PCD-650	6.500	0.750	0.250	0.937
PCD-700	7.000	1.250	0.250	1.000
PCD-800	8.000	0.750	0.250	1.031

Surface Finish: ISO 4287 & Chamfer Information on pages 7-9.
For ISO tolerance charts, refer to pages 12-13.

Compound information available on pages 20-37.

PCF - Fabric & Rubber Piston Cup

A product of MFP Seals.

MFPSEALS®
www.mfpseals.com

PCF - FABRIC & RUBBER PISTON CUP

Fabric & Rubber Piston Cups prevent extrusion in medium pressure installations under 1,000 PSI.
There is less chance of overtightening the inside follower plate, which can be a problem with rubber cups. All Fabric & Rubber Cups are supplied solid, with no precut hole.

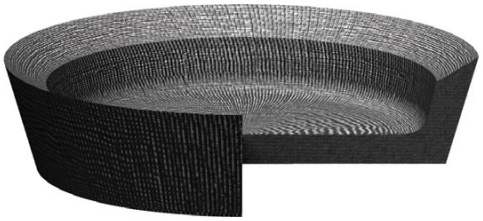

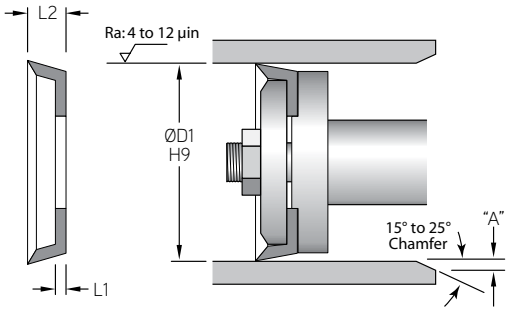

MFP PART NUMBER

PCF-175M1009

SEAL TYPE — ØD1 — COMPOUND

M1009 - FABRIC & RUBBER

MFP PART NUMBER	PISTON APPLICATION ØD1	L1	L2
TOLERANCE	H9		
PCF-050	0.500	0.125	0.500
PCF-075	0.750	0.125	0.500
PCF-087	0.875	0.094	0.375
PCF-093	0.938	0.125	0.500
PCF-100	1.000	0.125	0.500
PCF-112	1.125	0.125	0.500
PCF-125	1.250	0.125	0.500
PCF-137	1.375	0.125	0.500
PCF-150	1.500	0.125	0.500
PCF-162	1.625	0.125	0.500
PCF-175	1.750	0.125	0.500
PCF-187	1.875	0.125	0.500
PCF-200	2.000	0.125	0.500
PCF-212	2.125	0.125	0.500
PCF-225	2.250	0.125	0.500
PCF-237	2.375	0.125	0.500
PCF-250	2.500	0.125	0.500
PCF-262	2.625	0.125	0.500
PCF-275	2.750	0.125	0.500
PCF-287	2.875	0.125	0.500
PCF-300	3.000	0.156	0.625
PCF-312	3.125	0.156	0.625
PCF-325	3.250	0.156	0.625
PCF-337	3.375	0.156	0.625

Compound information available on pages 20-37.

Surface Finish: ISO 4287 & Chamfer Information on pages 7-9.
For ISO tolerance charts, refer to pages 12-13.

MFPSEALS®
www.mfpseals.com

PCF - Fabric & Rubber Piston Cup

A product of MFP Seals.

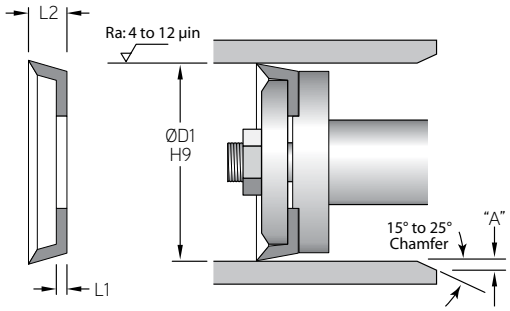

MFP PART NUMBER	PISTON APPLICATION ØD1	L1	L2
TOLERANCE	H9		
PCF-350	3.500	0.156	0.625
PCF-362	3.625	0.156	0.625
PCF-375	3.750	0.156	0.750
PCF-387	3.875	0.156	0.625
PCF-400	4.000	0.156	0.625
PCF-425	4.250	0.156	0.625
PCF-450	4.500	0.156	0.625
PCF-462	4.625	0.156	0.625
PCF-475	4.750	0.156	0.625
PCF-487	4.875	0.156	0.625
PCF-500	5.000	0.188	0.750
PCF-525	5.250	0.188	0.750
PCF-550	5.500	0.188	0.750
PCF-575	5.750	0.188	0.750
PCF-587	5.875	0.188	0.750
PCF-600	6.000	0.188	0.750
PCF-625	6.250	0.188	0.750
PCF-637	6.375	0.188	0.750
PCF-650	6.500	0.188	0.750
PCF-675	6.750	0.188	0.750
PCF-700	7.000	0.188	0.750
PCF-725	7.250	0.188	1.000
PCF-750	7.500	0.188	1.000
PCF-800	8.000	0.188	1.000
PCF-850	8.500	0.188	1.000
PCF-900	9.000	0.188	0.750
PCF-950	9.500	0.188	1.000
PCF-975	9.750	0.188	1.000
PCF-1000	10.000	0.188	1.000
PCF-1025	10.250	0.188	1.000
PCF-1100	11.000	0.188	1.000
PCF-1200	12.000	0.188	1.000
PCF-1225	12.250	0.188	1.000
PCF-1400	14.000	0.250	1.250
PCF-1600	16.000	0.250	1.500

Surface Finish: ISO 4287 & Chamfer Information on pages 7-9.
For ISO tolerance charts, refer to pages 12-13.

Compound information available on pages 20-37.

CGLR - (3 PC.) Capped Asymmetrical Rod Seal

A product of MFP Seals.

MFPSEALS®
www.mfpseals.com

CGLR - (3 P.C.) CAPPED ASYMMETRICAL ROD SEAL

CGLR Rod Seals are designed for effective sealing in both high and low pressure environments. They are designed to handle temperature extremes, a variety of fluids and larger than normal extrusion gaps. The CGLR's design separates the sealing function from anti-extrusion creating a single-acting, unidirectional seal that has long life under high pressure. The CGLR is designed to retrofit MIL-G-5514/AS4716 and AS4832 glands.

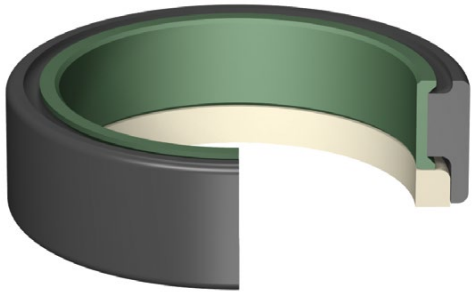

The standard compounds for this seal are: N6020 Energizer, T5100 Cap, and an M1000 Backup.

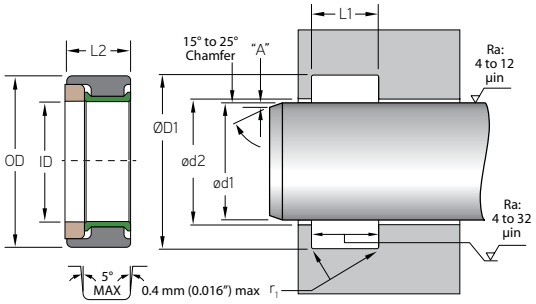

MFP PART NUMBER

CGLR-216-2N6020/T5100P

- SEAL TYPE: CGLR
- O-Ring DASH#: 216
- 1 - SINGLE BACK-UP RING GROOVE; 2 - TWO BACK-UP RING GROOVE: 2
- ENERGIZER COMPOUND: N6020
- CAP COMPOUND: T5100
- BACK-UP RING COMPOUND P = M1000: P

Pressure: 550 bar (8,000 psi) **Max. Velocity:** < 1.5 m/s (< 5 ft./s)

Contact your MFP Seals Sales Representative for available sizes.

Compound information available on pages 20-37.

Surface Finish: ISO 4287 & Chamfer Information on pages 7-9.
For ISO tolerance charts, refer to pages 12-13.

MFPSEALS®
www.mfpseals.com

CGTR - (4 PC.) Capped GT Rod Seal

A product of MFP Seals.

CAPPED GT - (4 PC.) ROD SEAL

The CGTR Capped GT Rod Seal is a heavy duty double-acting assembly. Each CGTR consists of an elastomeric expander, filled PTFE cap seal, and two anti-extrusion rings. Capped GT Rod Seals have excellent sealability; extrusion and wear resistance.

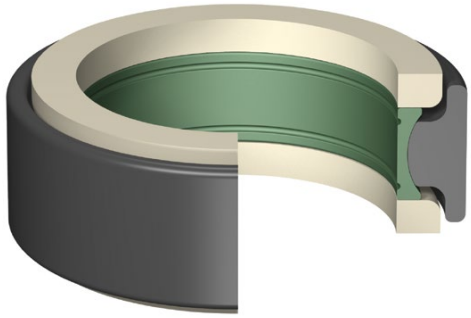

The standard compounds for this seal are: N6023 Energizer, T5100 Cap, and M1001 Backup Rings.

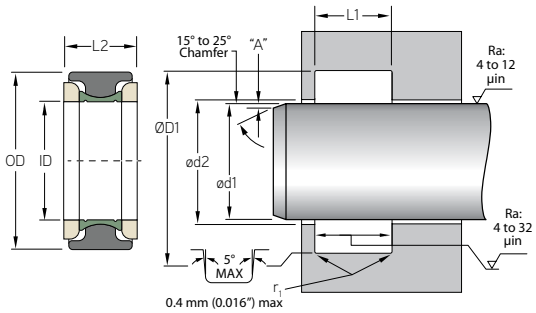

MFP PART NUMBER

CGTR-300N6023/T5100P

- CGTR: SEAL TYPE
- 300: O-Ring DASH#
- N6023: ENERGIZER COMPOUND
- T5100: CAP COMPOUND
- P: BACK-UP RING COMPOUND P = M1000

Pressure: 500 bar (7,500 psi) **Max. Velocity:** 1.5 m/s (5 ft./s)

Contact your MFP Seals Sales Representative for available sizes.

CRX Rod Seal® - (2 P.C.)

A product of MFP Seals.

MFPSEALS®
www.mfpseals.com

CRX ROD SEAL - (2 P.C.)

MFP Seals' CRX double-acting rod seals are designed to directly interchange with T-Seals, O-Rings and X-Rings, in AS568 O-Ring grooves without Back-Up. The urethane sealing surface produces a positive seal from vacuum to high pressure, due to a narrow single line seal contact area.

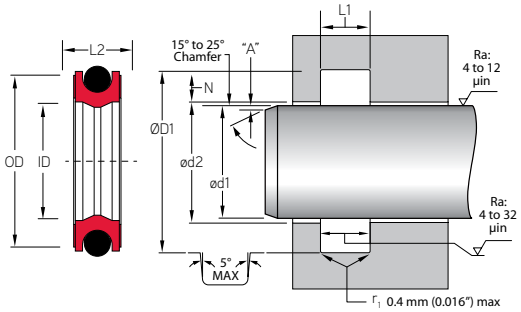

The standard compound for this seal is U2151, with an N6001 O-Ring Expander. It is also available in compounds U2145, U2150, U2162 and U4150.

MFP PART NUMBER

CRX-218U2151

SEAL TYPE — SIZE PER O-Ring DASH — COMPOUND

Pressure: 400 bar (5,800 psi) **Max. Velocity:** 0.5 m/s (< 1.6 ft./s)

MAXIMUM EXTRUSION GAP RECOMMENDATION

e-max at 80°C (175°F) for pressures

Radial Depth (Inch)	SERIES	PSI (BAR)		
N (NOMINAL)		2300 (160)	3600 (250)	5000 (344)
0.125	2	0.008	0.006	–
0.187	3	0.012	0.008	0.004
0.250	4	0.014	0.01	0.006

NOTE: The above data are maximum values for extrusion gap. Material type, pressure, temperature, speed and extrusion gap will affect extrusion resistance. Maximum values, pressure, speed, temperature and extrusion gap should not be applied continuously nor simultaneously.

MFP PART NUMBER	ROD APPLICATION				
	ød1	ØD1	ød2	L1	OR Groove
CRX-210	0.750	1.000	0.753	0.180	OR-210
CRX-212	0.875	1.125	0.878	0.180	OR-212
CRX-214	1.000	1.250	1.003	0.180	OR-214
CRX-215	1.062	1.312	1.065	0.180	OR-215
CRX-216	1.125	1.375	1.128	0.180	OR-216
CRX-218	1.250	1.500	1.253	0.180	OR-218
CRX-220	1.375	1.625	1.378	0.180	OR-220
CRX-222	1.500	1.750	1.503	0.180	OR-222
CRX-325	1.500	1.875	1.503	0.280	OR-325
CRX-326	1.625	2.000	1.628	0.280	OR-326
CRX-327	1.750	2.125	1.753	0.280	OR-327
CRX-329	2.000	2.375	2.003	0.280	OR-329
CRX-330	2.125	2.500	2.128	0.280	OR-330
CRX-331	2.250	2.625	2.253	0.280	OR-331
CRX-333	2.500	2.875	2.503	0.280	OR-333

Compound information available on pages 20-37.

Surface Finish: ISO 4287 & Chamfer Information on pages 7-9.
For ISO tolerance charts, refer to pages 12-13.

MFPSEALS®
www.mfpseals.com

CRX Rod Seal® - (2 P.C.)

A product of MFP Seals.

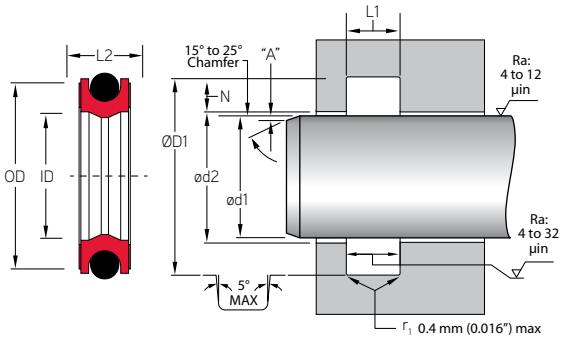

MFP PART NUMBER	ROD APPLICATION ød1	ØD1	ød2	L1	OR Groove
CRX-335	2.750	3.125	2.753	0.280	OR-335
CRX-337	3.000	3.375	3.003	0.280	OR-337
CRX-339	3.250	3.625	3.253	0.280	OR-339
CRX-341	3.500	3.875	3.503	0.280	OR-341
CRX-343	3.750	4.125	3.753	0.280	OR-343
CRX-345	4.000	4.375	4.003	0.280	OR-345
CRX-349	4.500	4.875	4.503	0.280	OR-349
CRX-431	5.250	5.750	5.254	0.370	OR-431
CRX-437	6.000	6.500	6.004	0.370	OR-437

Surface Finish: ISO 4287 & Chamfer Information on pages 7-9.
For ISO tolerance charts, refer to pages 12-13.

Compound information available on pages 20-37.

GT Ring - (3 PC.) Rod Seal

A product of MFP Seals.

MFPSEALS®
www.mfpseals.com

GT RING - (3 PC.) ROD SEAL

GT Rings are an excellent direct replacement for O-Rings and X-Rings. GT Rings help eliminate rolling or spiraling in long stroke or dry rod conditions. Designed for installation in standard commercial O-Ring grooves, GT-Rings are also available for grooves cut for one or two backup rings. Each GT-Ring consists of the T-shaped rubber sealing ring and the two anti-extrusion rings.

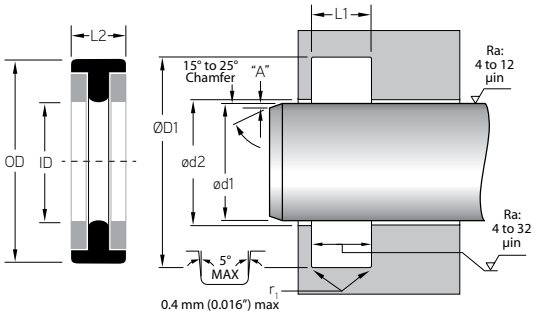

MFP PART NUMBER

GTR-037N6001
SEAL TYPE — SIZE — COMPOUND

GTR-037N6001-1
SEAL TYPE — SIZE — COMPOUND — 1 BU-Ring

GTR-037N6001-2
SEAL TYPE — SIZE — COMPOUND — 2 BU-Rings

Seal - N6001 ***Anti-Extrusion Rings - M1001***

Pressure: 700 bar (10,000 psi) **Max. Velocity:** 0.5 m/s (1.5 ft/s)

	ROD APPLICATION						
				GROOVE WIDTH			
MFP PART NUMBER	ød1	ØD1	ød2	NO BACKUP	1 BACKUP	2 BACKUP	OR SIZE
TOLERANCE	h9	H9	H9	+0.005/-0.000	+0.005/-0.000	+0.005/-0.000	
GTR-037	0.375	0.617	0.378	0.188	0.235	0.304	204
GTR-050	0.500	0.742	0.503	0.188	0.235	0.304	206
GTR-056	0.562	0.804	0.565	0.188	0.235	0.304	207
GTR-062	0.625	0.867	0.628	0.188	0.235	0.304	208
GTR-068	0.687	0.929	0.690	0.188	0.235	0.304	209
GTR-075	0.750	0.992	0.753	0.188	0.235	0.304	210
GTR-087	0.875	1.117	0.878	0.188	0.235	0.304	212
GTR-100	1.000	1.242	1.003	0.188	0.235	0.304	214
GTR-106	1.062	1.304	1.065	0.188	0.235	0.304	215
GTR-112	1.125	1.367	1.128	0.188	0.235	0.304	216
GTR-118	1.187	1.429	1.190	0.188	0.235	0.304	217
GTR-125	1.250	1.492	1.253	0.188	0.235	0.304	218
GTR-137	1.375	1.617	1.378	0.188	0.235	0.304	220
GTR-143	1.437	1.679	1.440	0.188	0.235	0.304	221
GTR-150	1.500	1.742	1.503	0.188	0.235	0.304	222
GTR-151	1.500	1.870	1.503	0.281	0.344	0.424	325
GTR-162	1.625	1.995	1.628	0.281	0.344	0.424	326
GTR-175	1.750	2.120	1.753	0.281	0.344	0.424	327
GTR-187	1.875	2.245	1.878	0.281	0.344	0.424	328

Compound information available on pages 20-37.

Surface Finish: ISO 4287 & Chamfer Information on pages 7-9.
For ISO tolerance charts, refer to pages 12-13.

MFPSEALS®
www.mfpseals.com

GT Ring - (3 PC.) Rod Seal

A product of MFP Seals.

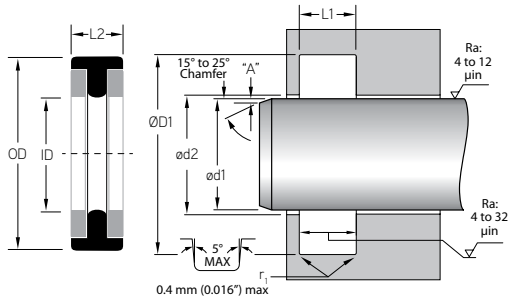

MFP PART NUMBER	ROD APPLICATION						
				GROOVE WIDTH			
	ød1	ØD1	ød2	NO BACKUP	1 BACKUP	2 BACKUP	OR SIZE
TOLERANCE	h9	H9	H9	+0.005/-0.000	+0.005/-0.000	+0.005/-0.000	
GTR-200	2.000	2.370	2.003	0.281	0.344	0.424	329
GTR-212	2.125	2.495	2.128	0.281	0.344	0.424	330
GTR-225	2.250	2.620	2.253	0.281	0.344	0.424	331
GTR-237	2.375	2.745	2.378	0.281	0.344	0.424	332
GTR-250	2.500	2.870	2.503	0.281	0.344	0.424	333
GTR-262	2.625	2.995	2.628	0.281	0.344	0.424	334
GTR-275	2.750	3.120	2.753	0.281	0.344	0.424	335
GTR-287	2.875	3.245	2.878	0.281	0.344	0.424	336
GTR-300	3.000	3.370	3.003	0.281	0.344	0.424	337
GTR-312	3.125	3.495	3.128	0.281	0.344	0.424	338
GTR-325	3.250	3.620	3.253	0.281	0.344	0.424	339
GTR-337	3.375	3.745	3.378	0.281	0.344	0.424	340
GTR-350	3.500	3.870	3.503	0.281	0.344	0.424	341
GTR-362	3.625	3.995	3.628	0.281	0.344	0.424	342
GTR-375	3.750	4.120	3.753	0.281	0.344	0.424	343
GTR-387	3.875	4.245	3.878	0.281	0.344	0.424	344
GTR-400	4.000	4.370	4.003	0.281	0.344	0.424	345
GTR-425	4.250	4.620	4.253	0.281	0.344	0.424	347
GTR-437	4.375	4.745	4.378	0.281	0.344	0.424	348
GTR-450	4.500	4.870	4.503	0.281	0.344	0.424	349
GTR-500	5.000	5.474	5.004	0.375	0.475	0.579	429
GTR-525	5.250	5.724	5.254	0.375	0.475	0.579	431
GTR-550	5.500	5.974	5.504	0.375	0.475	0.579	433
GTR-600	6.000	6.474	6.004	0.375	0.475	0.579	437
GTR-750	7.500	7.974	7.504	0.375	0.475	0.579	443
GTR-800	8.000	8.474	8.004	0.375	0.475	0.579	445
GTR-900	9.000	9.474	9.004	0.375	0.475	0.579	447

Surface Finish: ISO 4287 & Chamfer Information on pages 7-9.
For ISO tolerance charts, refer to pages 12-13.

Compound information available on pages 20-37.

RS10 - (2 PC.) Rotary Rod Seal

A product of MFP Seals.

MFPSEALS
www.mfpseals.com

RS10 - (2 P.C.) ROTARY ROD SEAL

MFP Seals' RS10 rotary shaft seal is used in light to medium duty oscillating applications. The RS10 design is ideal because of its low friction and long wear capabilities. Commonly used in swivel joints & machine tool applications.

The standard compounds for this seal is T5100, with an N6001 expander.

For increased chemical and temperature resistance, other compounds are available (See pages 26-37).

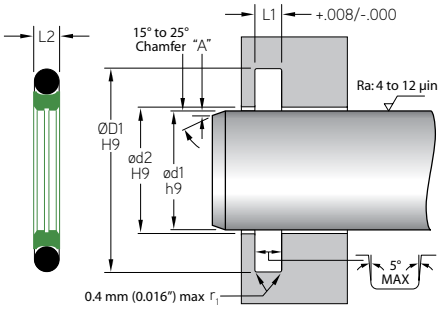

MFP PART NUMBER

RS10-0312x0T5100N

SEAL TYPE | ød1 | EXPANDER SERIES | COMPOUND | EXPANDER COMPOUND

Pressure: 200 bar (3,000 psi) **Max. Velocity:** 0.5 m/s (< 1.6 ft./s)

MFP PART NUMBER	ROD APPLICATION ød1	ØD1	L1	ød2	O-Ring DASH NO.
TOLERANCE	h9	H9	+.008/-.000	H9	
RS10-0500X0	0.500	0.693	0.087	0.501	-015
RS10-0562X0	0.562	0.756	0.087	0.564	-016
RS10-0625X0	0.625	0.818	0.087	0.626	-017
RS10-0687X0	0.687	0.881	0.087	0.689	-018
RS10-0750X0	0.750	0.943	0.087	0.751	-019
RS10-0812X0	0.812	1.006	0.087	0.814	-020
RS10-0875X0	0.875	1.068	0.087	0.876	-021
RS10-0937X0	0.937	1.131	0.087	0.939	-022
RS10-1000X0	1.000	1.193	0.087	1.001	-023
RS10-1125X0	1.125	1.318	0.087	1.126	-025
RS10-1250X0	1.250	1.443	0.087	1.251	-027
RS10-1375X0	1.375	1.568	0.087	1.376	-028
RS10-1500X1	1.500	1.795	0.126	1.501	-130
RS10-1625X1	1.625	1.920	0.126	1.626	-132
RS10-1750X1	1.750	2.045	0.126	1.751	-134
RS10-1875X1	1.875	2.170	0.126	1.876	-135
RS10-2000X1	2.000	2.295	0.126	2.001	-137
RS10-2125X1	2.125	2.420	0.126	2.126	-139
RS10-2250X1	2.250	2.545	0.126	2.251	-141
RS10-2375X1	2.375	2.670	0.126	2.376	-143
RS10-2500X1	2.500	2.795	0.126	2.501	-145
RS10-2625X1	2.625	2.920	0.126	2.626	-147
RS10-2750X1	2.750	3.045	0.126	2.751	-149
RS10-2875X1	2.875	3.170	0.126	2.876	-150

Compound information available on pages 20-37.

Surface Finish: ISO 4287 & Chamfer Information on pages 7-9.
For ISO tolerance charts, refer to pages 12-13.

MFPSEALS®
www.mfpseals.com

RS10 - (2 PC.) Rotary Rod Seal

A product of MFP Seals.

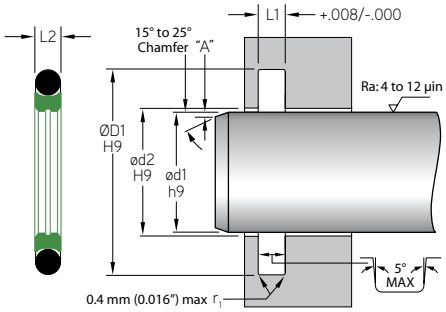

MFP PART NUMBER	ROD APPLICATION ød1	ØD1	L1	ød2	O-Ring DASH NO.
TOLERANCE	h9	H9	+.008/-.000	H9	
RS10-3000X2	3.000	3.433	0.165	3.001	-235
RS10-3125X2	3.125	3.558	0.165	3.126	-236
RS10-3250X2	3.250	3.683	0.165	3.251	-237
RS10-3375X2	3.375	3.808	0.165	3.376	-238
RS10-3500X2	3.500	3.933	0.165	3.501	-239
RS10-3625X2	3.625	4.058	0.165	3.626	-240
RS10-3750X2	3.750	4.183	0.165	3.751	-241
RS10-3875X2	3.875	4.308	0.165	3.876	-242
RS10-4000X2	4.000	4.433	0.165	4.001	-243
RS10-4125X2	4.125	4.558	0.165	4.126	-244
RS10-4250X2	4.250	4.683	0.165	4.251	-245
RS10-4375X2	4.375	4.808	0.165	4.376	-246
RS10-4500X2	4.500	4.933	0.165	4.501	-247
RS10-4625X2	4.625	5.058	0.165	4.626	-248
RS10-4750X2	4.750	5.183	0.165	4.751	-249
RS10-4875X2	4.875	5.308	0.165	4.876	-250
RS10-5000X2	5.000	5.433	0.165	5.001	-251
RS10-5125X2	5.125	5.558	0.165	5.126	-252
RS10-5250X2	5.250	5.683	0.165	5.251	-253
RS10-5375X2	5.375	5.808	0.165	5.376	-254
RS10-5500X2	5.500	5.933	0.165	5.501	-255
RS10-5625X2	5.625	6.058	0.165	5.626	-256
RS10-5750X2	5.750	6.183	0.165	5.751	-257
RS10-5875X2	5.875	6.308	0.165	5.876	-258
RS10-6000X3	6.000	6.610	0.248	6.002	-362
RS10-6250X3	6.250	6.860	0.248	6.252	-363
RS10-6500X3	6.500	7.110	0.248	6.502	-364
RS10-6750X3	6.750	7.360	0.248	6.752	-365
RS10-7000X3	7.000	7.610	0.248	7.002	-365
RS10-7250X3	7.250	7.860	0.248	7.252	-366
RS10-7500X3	7.500	8.110	0.248	7.502	-367
RS10-7750X3	7.750	8.360	0.248	7.752	-368
RS10-8000X3	8.000	8.610	0.248	8.002	-369
RS10-8250X3	8.250	8.860	0.248	8.252	-370
RS10-8500X3	8.500	9.110	0.248	8.502	-371

Surface Finish: ISO 4287 & Chamfer Information on pages 7-9.
For ISO tolerance charts, refer to pages 12-13.

Compound information available on pages 20-37.

RS10 - (2 PC.) Rotary Rod Seal

A product of MFP Seals.

MFPSEALS®
www.mfpseals.com

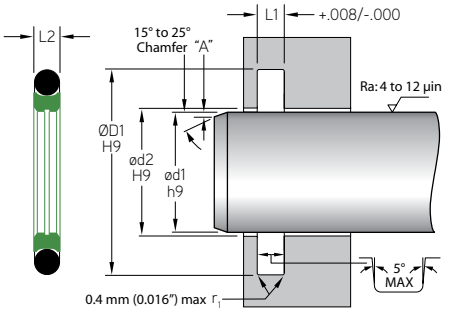

MFP PART NUMBER	ROD APPLICATION ød1	ØD1	L1	ød2	O-Ring DASH NO.
TOLERANCE	h9	H9	+.008/-.000	H9	
RS10-8750X3	8.750	9.360	0.248	8.752	-372
RS10-9000X3	9.000	9.610	0.248	9.002	-373
RS10-9250X3	9.250	9.860	0.248	9.252	-374
RS10-9500X3	9.500	10.110	0.248	9.502	-375
RS10-9750X3	9.750	10.360	0.248	9.752	-376
RS10-10000X3	10.000	10.610	0.248	10.002	-377
RS10-10500X3	10.500	11.110	0.248	10.502	-378
RS10-11000X3	11.000	11.610	0.248	11.002	-379
RS10-11500X3	11.500	12.110	0.248	11.502	-380
RS10-12000X4	12.000	12.827	0.319	12.002	-453
RS10-12500X4	12.500	13.327	0.319	12.502	-454
RS10-13000X4	13.000	13.827	0.319	13.002	-455
RS10-13500X4	13.500	14.327	0.319	13.502	-456
RS10-14000X4	14.000	14.827	0.319	14.002	-457
RS10-14500X4	14.500	15.327	0.319	14.502	-458
RS10-15000X4	15.000	15.827	0.319	15.002	-459
RS10-15500X4	15.500	16.327	0.319	15.502	-460
RS10-16000X4	16.000	16.827	0.319	16.002	-461
RS10-16500X4	16.500	17.327	0.319	16.502	-462
RS10-17000X4	17.000	17.827	0.319	17.002	-463
RS10-17500X4	17.500	18.327	0.319	17.502	-464
RS10-18000X4	18.000	18.827	0.319	18.002	-465
RS10-18500X4	18.500	19.327	0.319	18.502	-466
RS10-19000X4	19.000	19.827	0.319	19.002	-467
RS10-19500X4	19.500	20.327	0.319	19.502	-468
RS10-20000X4	20.000	20.827	0.319	20.002	-469

Compound information available on pages 20-37.

Surface Finish: ISO 4287 & Chamfer Information on pages 7-9.
For ISO tolerance charts, refer to pages 12-13.

RETURN TO INDEX

MFPSEALS®
www.mfpseals.com

Capped GT - (4 PC.) Piston Seal

A product of MFP Seals.

CAPPED GT - (4 PC.) PISTON SEAL

Capped GT Rings are a heavy duty double-acting assembly. Each piston set consists of a rubber expander, filled PTFE Seal, and two Nylon® anti-extrusion rings. Capped GT Rings have excellent sealability; extrusion and wear resistance.

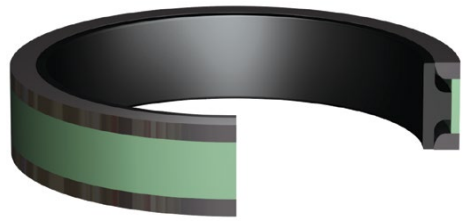

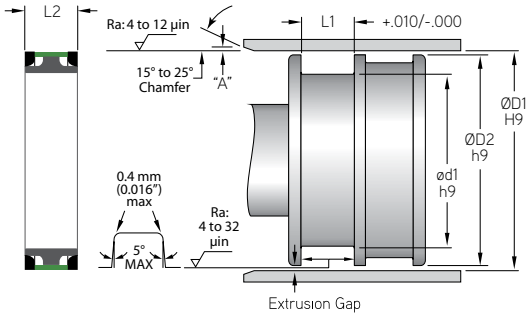

MFP PART NUMBER

CGT-300N6023/T5100A

- SEAL TYPE: CGT
- SIZE: 300
- EXPANDER COMPOUND: N6023
- CAP COMPOUND: T5100
- BACK-UP RING COMPOUND A = M1001

Energizer - N6001, N6015, N6021, N6022 & N6023
Cap - T5100
Back-Up Rings - M1001

Pressure: 500 bar (7,500 psi) **Max. Velocity:** 1.5 m/s (5 ft./s)

	PISTON APPLICATION			
MFP PART NUMBER	**ØD1**	**ØD2**	**ød1**	**L1**
TOLERANCE	H9	h9	h9	+.010/-.000
CGT-100	1.000	0.999	0.628	0.424
CGT-150	1.500	1.499	1.128	0.424
CGT-175	1.750	1.749	1.378	0.424
CGT-200	2.000	1.999	1.628	0.424
CGT-225	2.250	2.249	1.878	0.424
CGT-250	2.500	2.499	2.128	0.424
CGT-275	2.750	2.749	2.378	0.424
CGT-300	3.000	2.998	2.522	0.579
CGT-325	3.250	3.248	2.772	0.579
CGT-350	3.500	3.498	3.022	0.579
CGT-375	3.750	3.748	3.272	0.579
CGT-400	4.000	3.998	3.522	0.579
CGT-425	4.250	4.248	3.772	0.579
CGT-450	4.500	4.498	4.022	0.579
CGT-475	4.750	4.748	4.272	0.579
CGT-500	5.000	4.998	4.272	0.750
CGT-525	5.250	5.248	4.522	0.750
CGT-537	5.375	5.373	4.647	0.750
CGT-550	5.500	5.497	4.772	0.750
CGT-555	5.500	5.497	5.020	0.579
CGT-575	5.750	5.747	5.022	0.750
CGT-600	6.000	5.997	5.272	0.750

Surface Finish: ISO 4287 & Chamfer Information on pages 7-9.
For ISO tolerance charts, refer to pages 12-13.

Compound information available on pages 20-37.

Capped GT - (4 PC.) Piston Seal

A product of MFP Seals.

MFPSEALS®
www.mfpseals.com

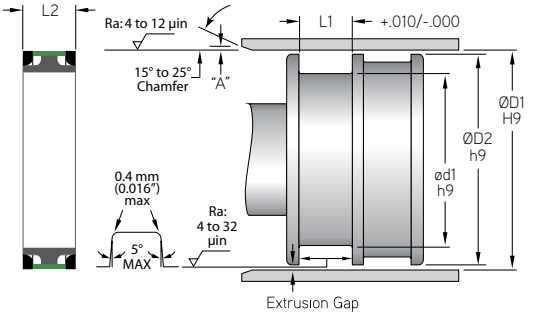

	PISTON APPLICATION			
MFP PART NUMBER	**ØD1**	**ØD2**	**ød1**	**L1**
TOLERANCE	H9	h9	h9	+.010/-.000
CGT-625	6.250	6.247	5.522	0.750
CGT-650	6.500	6.497	5.772	0.750
CGT-655	6.500	6.497	6.020	0.579
CGT-675	6.750	6.747	6.022	0.750
CGT-700	7.000	6.997	6.272	0.750
CGT-725	7.250	7.247	6.522	0.750
CGT-750	7.500	7.497	6.772	0.750
CGT-775	7.750	7.747	7.022	0.750
CGT-800	8.000	7.996	7.272	0.750
CGT-825	8.250	8.246	7.522	0.750
CGT-850	8.500	8.496	7.772	0.750
CGT-875	8.750	8.746	8.022	0.750
CGT-900	9.000	8.996	8.272	0.750
CGT-950	9.500	9.496	8.772	0.750
CGT-1000	10.000	9.996	9.272	0.750
CGT-1050	10.500	10.496	9.772	0.750
CGT-1100	11.000	10.996	10.272	0.750
CGT-1150	11.500	11.496	10.772	0.750
CGT-1200	12.000	11.996	11.272	0.750
CGT-1250	12.500	12.496	11.772	0.750
CGT-1300	13.000	12.996	12.272	0.750
CGT-1350	13.500	13.495	12.772	0.750
CGT-1400	14.000	13.995	13.272	0.750
CGT-1500	15.000	14.995	14.272	0.750
CGT-1600	16.000	15.995	15.272	0.750

Compound information available on pages 20-37.

Surface Finish: ISO 4287 & Chamfer Information on pages 7-9.
For ISO tolerance charts, refer to pages 12-13.

MFPSEALS®
www.mfpseals.com

Narrow Capped GT - (4 PC.) Piston Seal

A product of MFP Seals.

NARROW CAPPED GT - (4 PC.) PISTON SEAL

Narrow Capped GT Rings are a heavy duty double-acting assembly. They are designed the same as Capped GT Rings, but are made to special sizes found in OEM cylinders, including Caterpillar®. Each piston set consists of a rubber expander, filled PTFE seal, and two Nylon® anti-extrusion rings. Narrow Capped GT Rings have excellent sealability; extrusion and wear resistance.

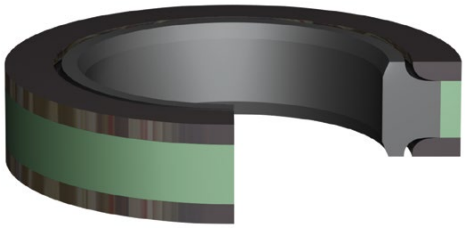

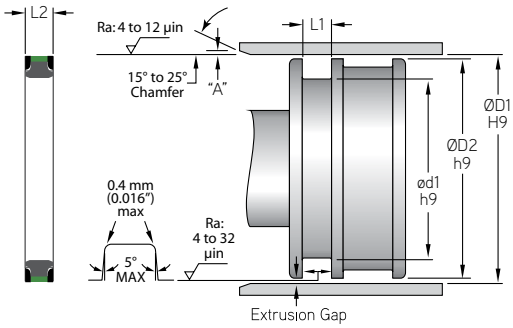

MFP PART NUMBER

NCGT-450N6023/T5100A

- SEAL TYPE: NCGT
- SIZE: 450
- EXPANDER COMPOUND: N6023
- CAP COMPOUND: T5100
- BACK-UP RING COMPOUND A = M1001

Energizer - N6001, N6015, N6021, N6022 & N6023
Cap - T5100
Back-Up Rings - M1001

Pressure: 500 bar (7,500 psi) **Max. Velocity:** 1.5 m/s (5 ft./s)

MFP PART NUMBER	PISTON APPLICATION ØD1	ØD2	ød1	L1
TOLERANCE	H9	h9	h9	
NCGT-450	4.500	4.497	3.909	0.492
NCGT-500	5.000	4.996	4.094	0.630
NCGT-550	5.500	5.496	4.594	0.630
NCGT-600	6.000	5.996	5.094	0.630
NCGT-625	6.250	6.246	5.344	0.630
NCGT-650	6.500	6.496	5.594	0.630
NCGT-700	7.000	6.996	6.094	0.630
NCGT-725	7.250	7.246	6.344	0.630
NCGT-750	7.500	7.496	6.594	0.630
NCGT-775	7.750	7.746	6.844	0.630
NCGT-825	8.250	8.246	7.344	0.630
NCGT-850	8.500	8.496	7.594	0.630
NCGT-1000	10.000	9.996	8.898	0.689
NCGT-1050	10.500	10.496	9.398	0.689
NCGT-1150	11.500	11.496	10.398	0.689

Surface Finish: ISO 4287 & Chamfer Information on pages 7-9.
For ISO tolerance charts, refer to pages 12-13.

Compound information available on pages 20-37.

CPX Piston Seal® - (2 P.C.)

A product of MFP Seals.

MFPSEALS®
www.mfpseals.com

CPX PISTON SEAL® - (2 P.C.)

MFP Seals' CPX Piston Seal® is a double-acting piston seal designed to directly interchange with T-Seals, O-Rings and X-Rings. The urethane sealing surface produces a positive seal from vacuum to high pressure, due to a narrow single line seal contact area.

The standard compound for this seal is U2151, with an N6001 O-Ring Expander. It is also available in compounds U2145, U2150, U2162, & U4150.

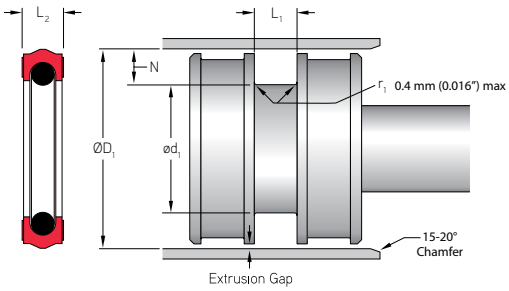

MFP PART NUMBER

CPX-222U2151

SEAL TYPE — SIZE PER AS568D — COMPOUND

CPX-222-2U2151

ADD -2 FOR WIDE BASE

Pressure: 400 bar (5,800 psi) **Max. Velocity:** 0.5 m/s (< 1.6 ft./s)

MAXIMUM EXTRUSION GAP RECOMMENDATION

e-max at 80°C (175°F) for pressures

Radial Depth (Inch)	SERIES	PSI (BAR)		
N (NOMINAL)		2300 (160)	3600 (250)	5000 (344)
0.125	2	0.008	0.006	–
0.187	3	0.012	0.008	0.004
0.250	4	0.014	0.01	0.006

NOTE: The above data are maximum values for extrusion gap. Material type, pressure, temperature, speed and extrusion gap will affect extrusion resistance. Maximum values, pressure, speed, temperature and extrusion gap should not be applied continuously nor simultaneously.

MFP PART NUMBER	PISTON APPLICATION ØD1	PISTON APPLICATION ØD2	ød1	GROOVE WIDTH: STANDARD (NO BACKUP)	GROOVE WIDTH: WIDE BASE (2 BACKUP)
TOLERANCE	H9	h9	h9	+0.005/-0.000	+0.005/-0.000
CPX-214	1.250	1.248	1.008	0.187	–
CPX-216	1.375	1.373	1.133	0.187	–
CPX-218	1.500	1.498	1.258	0.187	–
CPX-220	1.625	1.623	1.383	0.187	–
CPX-222	1.750	1.748	1.508	0.187	0.304
CPX-224	2.000	1.998	1.758	0.187	–
CPX-326	2.000	1.998	1.630	0.281	0.424
CPX-328	2.250	2.248	1.880	0.281	–
CPX-330	2.500	2.498	2.130	0.281	0.424
CPX-332	2.750	2.748	2.380	0.281	0.424
CPX-334	3.000	2.998	2.630	0.281	0.424
CPX-338	3.500	3.498	3.130	0.281	0.424
CPX-340	3.750	3.748	3.380	0.281	–
CPX-342	4.000	3.998	3.630	0.281	0.424
CPX-346	4.500	4.498	4.130	0.281	–
CPX-350	5.000	4.998	4.630	0.281	–
CPX-425	5.000	4.998	4.526	0.375	–
CPX-427	5.250	5.248	4.776	0.375	–
CPX-429	5.500	5.498	5.026	0.375	–
CPX-433	6.000	5.998	5.526	0.375	–
CPX-437	6.500	6.498	6.026	0.375	–
CPX-440	7.250	7.248	6.776	0.375	–
CPX-443	8.000	7.998	7.526	0.375	–

Compound information available on pages 20-37.

Surface Finish: ISO 4287 & Chamfer Information on pages 7-9.
For ISO tolerance charts, refer to pages 12-13.

MFPSEALS®
www.mfpseals.com

GT Ring - (3 PC.) Piston Seal

A product of MFP Seals.

GT RING - (3 PC.) PISTON SEAL

GT Rings are an excellent direct replacement for O-Rings or X-Rings, and help eliminate rolling or spiraling in long stroke or dry rod conditions. Designed for installation in standard commercial O-Ring grooves, GT-Rings are also available for grooves cut for one or two backup rings. Each GT-Ring consists of the T-shaped rubber sealing ring and the two anti-extrusion rings.

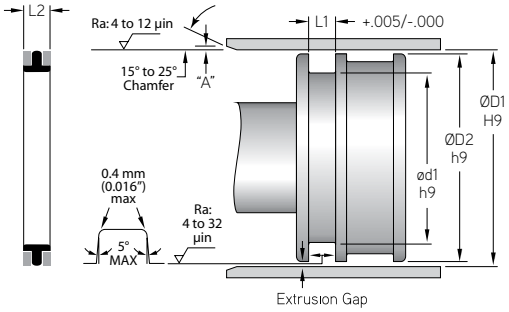

MFP PART NUMBER

GTP-037N6001
SEAL TYPE — SIZE — COMPOUND

GTP-037N6001-1
SEAL TYPE — SIZE — COMPOUND — 1 BU-Ring

GTP-037N6001-2
SEAL TYPE — SIZE — COMPOUND — 2 BU-Rings

Seal - N6001 ***Anti-Extrusion Rings - M1001***

Pressure: 700 bar (10,000 psi) **Max. Velocity:** 0.5 m/s (< 1.6 ft./s)

	PISTON APPLICATION						
				L1 - GROOVE WIDTH			
MFP PART NUMBER	ØD1	ød1	ØD2	NO BACKUP	1 BACKUP	2 BACKUP	OR SIZE
TOLERANCE	H9	h9	h9	+0.005/-0.000	+0.005/-0.000	+0.005/-0.000	
GTP-037	0.375	0.199	0.373	0.141	0.183	0.245	106
GTP-043	0.437	0.261	0.435	0.141	0.183	0.245	108
GTP-050	0.500	0.324	0.498	0.141	0.183	0.245	109
GTP-056	0.562	0.320	0.559	0.188	0.235	0.304	203
GTP-062	0.625	0.383	0.622	0.188	0.235	0.304	204
GTP-068	0.687	0.445	0.684	0.188	0.235	0.304	205
GTP-075	0.750	0.508	0.747	0.188	0.235	0.304	206
GTP-081	0.812	0.570	0.809	0.188	0.235	0.304	207
GTP-087	0.875	0.633	0.872	0.188	0.235	0.304	208
GTP-093	0.937	0.695	0.934	0.188	0.235	0.304	209
GTP-100	1.000	0.758	0.997	0.188	0.235	0.304	210
GTP-106	1.062	0.820	1.059	0.188	0.235	0.304	211
GTP-112	1.125	0.883	1.122	0.188	0.235	0.304	212
GTP-118	1.187	0.945	1.184	0.188	0.235	0.304	213
GTP-125	1.250	1.008	1.247	0.188	0.235	0.304	214
GTP-131	1.312	1.070	1.309	0.188	0.235	0.304	215
GTP-137	1.375	1.133	1.372	0.188	0.235	0.304	216
GTP-143	1.437	1.195	1.434	0.188	0.235	0.304	217
GTP-150	1.500	1.258	1.497	0.188	0.235	0.304	218
GTP-156	1.562	1.320	1.559	0.188	0.235	0.304	219

Surface Finish: ISO 4287 & Chamfer Information on pages 7-9.
For ISO tolerance charts, refer to pages 12-13.

Compound information available on pages 20-37.

GT Ring - (3 PC.) Piston Seal

A product of MFP Seals.

MFPSEALS®
www.mfpseals.com

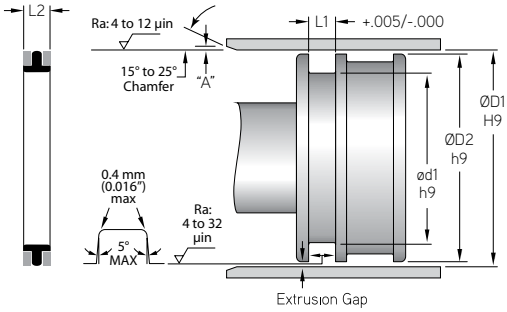

	PISTON APPLICATION						
				L1 - GROOVE WIDTH			
MFP PART NUMBER	ØD1	ød1	ØD2	NO BACKUP	1 BACKUP	2 BACKUP	OR SIZE
TOLERANCE	H9	h9	h9	+0.005/-0.000	+0.005/-0.000	+0.005/-0.000	
GTP-162	1.625	1.383	1.622	0.188	0.235	0.304	220
GTP-168	1.687	1.445	1.684	0.188	0.235	0.304	221
GTP-175	1.750	1.508	1.747	0.188	0.235	0.304	222
GTP-187	1.875	1.505	1.872	0.281	0.344	0.424	325
GTP-200	2.000	1.630	1.997	0.281	0.344	0.424	326
GTP-212	2.125	1.755	2.122	0.281	0.344	0.424	327
GTP-225	2.250	1.880	2.247	0.281	0.344	0.424	328
GTP-237	2.375	2.005	2.372	0.281	0.344	0.424	329
GTP-250	2.500	2.130	2.497	0.281	0.344	0.424	330
GTP-262	2.625	2.255	2.622	0.281	0.344	0.424	331
GTP-275	2.750	2.380	2.747	0.281	0.344	0.424	332
GTP-287	2.875	2.505	2.872	0.281	0.344	0.424	333
GTP-300	3.000	2.630	2.997	0.281	0.344	0.424	334
GTP-312	3.125	2.755	3.122	0.281	0.344	0.424	335
GTP-325	3.250	2.880	3.247	0.281	0.344	0.424	336
GTP-337	3.375	3.005	3.372	0.281	0.344	0.424	337
GTP-350	3.500	3.130	3.497	0.281	0.344	0.424	338
GTP-362	3.625	3.255	3.622	0.281	0.344	0.424	339
GTP-375	3.750	3.380	3.747	0.281	0.344	0.424	340
GTP-387	3.875	3.505	3.872	0.281	0.344	0.424	341
GTP-400	4.000	3.630	3.997	0.281	0.344	0.424	342
GTP-412	4.125	3.755	4.122	0.281	0.344	0.424	343
GTP-425	4.250	3.880	4.247	0.281	0.344	0.424	344
GTP-437	4.375	4.005	4.372	0.281	0.344	0.424	345
GTP-450	4.500	4.130	4.497	0.281	0.344	0.424	346
GTP-462	4.625	4.255	4.622	0.281	0.344	0.424	347
GTP-475	4.750	4.380	4.747	0.281	0.344	0.424	348
GTP-487	4.875	4.505	4.872	0.281	0.344	0.424	349
GTP-500	5.000	4.630	4.997	0.281	0.344	0.424	350
GTP-512	5.125	4.651	5.121	0.375	0.475	0.579	426
GTP-525	5.250	4.776	5.246	0.375	0.475	0.579	427
GTP-537	5.375	4.901	5.371	0.375	0.475	0.579	428
GTP-550	5.500	5.026	5.496	0.375	0.475	0.579	429
GTP-562	5.625	5.151	5.621	0.375	0.475	0.579	430

Compound information available on pages 20-37.

Surface Finish: ISO 4287 & Chamfer Information on pages 7-9.
For ISO tolerance charts, refer to pages 12-13.

MFPSEALS®
www.mfpseals.com

GT Ring - (3 PC.) Piston Seal

A product of MFP Seals.

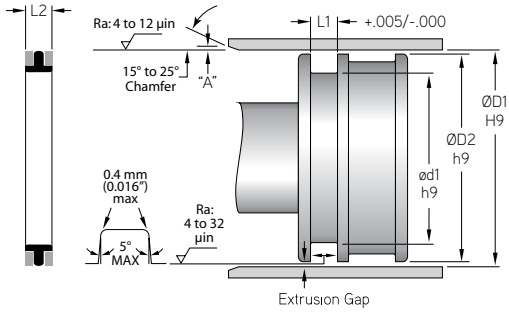

	PISTON APPLICATION						
				L1 - GROOVE WIDTH			
MFP PART NUMBER	ØD1	ød1	ØD2	NO BACKUP	1 BACKUP	2 BACKUP	OR SIZE
TOLERANCE	H9	h9	h9	+0.005/-0.000	+0.005/-0.000	+0.005/-0.000	
GTP-575	5.750	5.276	5.746	0.375	0.475	0.579	431
GTP-587	5.875	5.401	5.871	0.375	0.475	0.579	432
GTP-600	6.000	5.526	5.996	0.375	0.475	0.579	433
GTP-612	6.125	5.651	6.121	0.375	0.475	0.579	434
GTP-625	6.250	5.776	6.246	0.375	0.475	0.579	435
GTP-650	6.500	6.026	6.496	0.375	0.475	0.579	437
GTP-675	6.750	6.276	6.746	0.375	0.475	0.579	438
GTP-700	7.000	6.526	6.996	0.375	0.475	0.579	439
GTP-725	7.250	6.776	7.246	0.375	0.475	0.579	440
GTP-750	7.500	7.026	7.496	0.375	0.475	0.579	441
GTP-775	7.750	7.276	7.746	0.375	0.475	0.579	442
GTP-800	8.000	7.526	7.996	0.375	0.475	0.579	443
GTP-825	8.250	7.776	8.246	0.375	0.475	0.579	444
GTP-850	8.500	8.026	8.496	0.375	0.475	0.579	445
GTP-900	9.000	8.526	8.996	0.375	0.475	0.579	446
GTP-950	9.500	9.026	9.496	0.375	0.475	0.579	447
GTP-1000	10.000	9.526	9.996	0.375	0.475	0.579	448
GTP-1050	10.500	10.026	10.496	0.375	0.475	0.579	449
GTP-1100	11.000	10.526	10.996	0.375	0.475	0.579	450
GTP-1150	11.500	11.026	11.496	0.375	0.475	0.579	451
GTP-1200	12.000	11.526	11.996	0.375	0.475	0.579	452

Surface Finish: ISO 4287 & Chamfer Information on pages 7-9.
For ISO tolerance charts, refer to pages 12-13.

Compound information available on pages 20-37.

HPX Piston Seal™ - (2 P.C.)

A product of MFP Seals.

MFPSEALS®
www.mfpseals.com

HPX PISTON SEAL™ - (2 P.C.)

MFP Seals' compact HPX Piston Seal™ is designed to fit AS568 standard O-Ring grooves. The HPX seal is composed of a Hytrel® seal with an NBR elastomeric energizer, design for light to medium duty hydraulic applications.

The standard compound for this seal is H2155, with an NBR expander. It is also available in U2150, with an NBR expander.

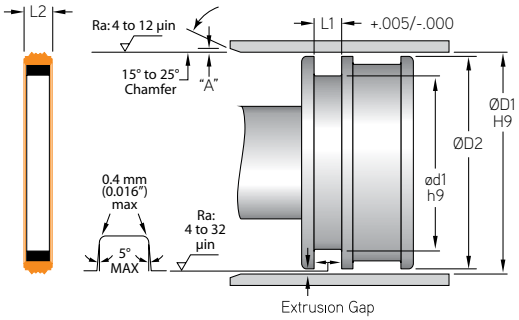

MFP PART NUMBER

HPX-218H2155

SEAL TYPE — SIZE PER O-Ring DASH — COMPOUND

Pressure: 350 bar (5,000 psi) **Max. Velocity:** 1.0 m/s (3 ft./s)

	FITS STANDARD AS568 O-RING GROOVE			
MFP PART NUMBER	ØD1	ØD2	ød1	L1
TOLERANCE	H9	h9	h9	+0.005/-0.000
HPX-218	1.500	1.498	1.258	0.187
HPX-222	1.750	1.748	1.508	0.187
HPX-326	2.000	1.998	1.630	0.281
HPX-330	2.500	2.498	2.130	0.281
HPX-334	3.000	2.998	2.630	0.281
HPX-338	3.500	3.498	3.130	0.281
HPX-342	4.000	3.998	3.630	0.281
HPX-350	5.000	4.998	4.630	0.281

	FITS O-RING GROOVE DESIGNED FOR TWO BACK-UP RINGS			
MFP PART NUMBER	ØD1	ØD2	ød1	L1
TOLERANCE	H9	h9	h9	+0.005/-0.000
HPX-218-2	1.500	1.498	1.258	0.275
HPX-326-2	2.000	1.998	1.630	0.410
HPX-330-2	2.500	2.498	2.130	0.410
HPX-334-2	3.000	2.998	2.630	0.410
HPX-338-2	3.500	3.498	3.130	0.410
HPX-342-2	4.000	3.998	3.630	0.410
HPX-425-2	5.000	4.998	4.528	0.538
HPX-433-2	6.000	5.998	5.528	0.538

Compound information available on pages 20-37.

Surface Finish: ISO 4287 & Chamfer Information on pages 7-9.
For ISO tolerance charts, refer to pages 12-13.

MFPSEALS®
www.mfpseals.com

PSA (5 P.C.) Piston Seal

A product of MFP Seals.

PSA - (5 PC.) PISTON SEAL

MFP Seals' PSA (5 PC.) piston seal is used for bi-directional sealing. Composed of an elastomeric seal profile with back-up rings and guide rings. This compact seal design can be used on a closed or split piston.

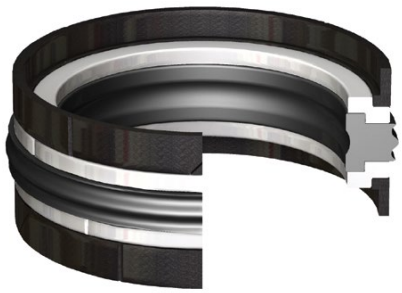

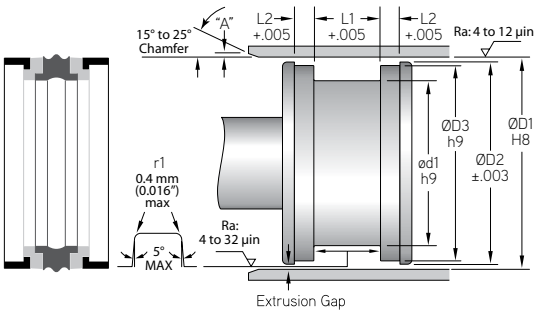

MFP PART NUMBER

PSA-1500X1000X0625X150

SEAL TYPE | ØD1 | ØD3 | ød1 | L2

Piston Seal - NBR80
Back-Up Rings - Polyester Elastomer
Guide Rings - POM

Pressure: 400 bar (5,800 psi) **Max. Velocity:** 0.5 m/s (< 1.6 ft./s)

	PISTON APPLICATION					
MFP PART NUMBER	**ØD1**	**ød1**	**ØD2**	**ØD3**	**L1**	**L2**
TOLERANCE	H8	h9	+.003/-.003	h9	+0.005/-0.000	+0.005/-0.000
PSA-2000X1375X0750X250	2.000	1.375	1.948	1.820	0.750	0.250
PSA-2500X1875X0750X250	2.500	1.875	2.446	2.319	0.750	0.250
PSA-2500X2125X0437X150	2.500	2.125	2.446	2.327	0.437	0.150
PSA-3000X2250X0937X250	3.000	2.250	2.933	2.770	0.937	0.250
PSA-3250X2500X0937X250	3.250	2.500	3.185	3.021	0.937	0.250
PSA-3500X2750X0937X250	3.500	2.750	3.434	3.271	0.937	0.250
PSA-4000X3250X0937X250	4.000	3.250	3.940	3.770	0.937	0.250
PSA-5000X4000X1250X375	5.000	4.000	4.920	4.728	1.250	0.375
PSA-5500X4500X1250X250	5.500	4.500	5.402	5.213	1.250	0.250
PSA-6000X5000X1250X375	6.000	5.000	5.902	5.709	1.250	0.375
PSA-7000X6000X1250X375	7.000	6.000	6.910	6.713	1.250	0.375
PSA-8000X7000X1250X375	8.000	7.000	7.920	7.723	1.250	0.375

Surface Finish: ISO 4287 & Chamfer Information on pages 7-9.
For ISO tolerance charts, refer to pages 12-13.

Compound information available on pages 20-37.

PSQ - (3 PC.) Piston Seal

A product of MFP Seals.

MFPSEALS®
www.mfpseals.com

PSQ - (3 P.C.) PISTON SEAL

The PSQ is a double acting piston seal that combines low friction sealing with increased stability and superior leak control. This three piece seal assembly is ideal for accumulators and stabilizers.

Vented PSQ piston seals are also available upon request.

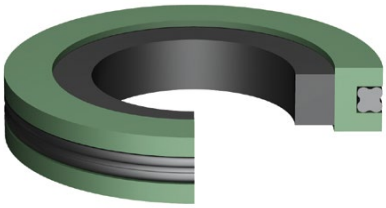

The standard compounds for this seal are T5100 Piston Seal, N6017 Square Ring, with an N6014 X-Ring Expander.

For increased chemical and temperature resistance, other compounds are available (See pages 20-37).

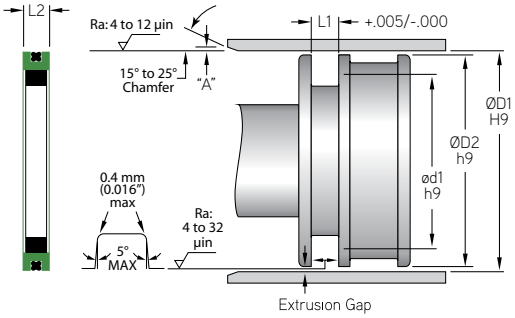

MFP PART NUMBER

PSQ-01.500T5100N

SEAL TYPE | ØD1 | COMPOUND | EXPANDER & X-RING COMPOUND

Pressure: 400 bar (5,800 psi) **Max. Velocity:** 3.0 m/s (9 ft./s)

MFP PART NUMBER	PISTON APPLICATION ØD1	ød1	L1	ØD2	X-RING DASH NO.	SQUARE RING DASH NO.
TOLERANCE	H9	h9	+0.005/-0.000	h9		
PSQ-01.500	1.500	0.884	0.288	1.499	-125	-316
PSQ-02.000	2.000	1.384	0.288	1.999	-133	-324
PSQ-02.250	2.250	1.634	0.288	2.249	-136	-326
PSQ-02.500	2.500	1.884	0.288	2.499	-140	-328
PSQ-02.750	2.750	2.134	0.288	2.749	-145	-330
PSQ-03.000	3.000	2.384	0.288	2.999	-148	-332
PSQ-03.250	3.250	2.634	0.288	3.249	-151	-334
PSQ-03.500	3.500	2.884	0.288	3.499	-152	-336
PSQ-03.750	3.750	3.134	0.288	3.749	-153	-338
PSQ-04.000	4.000	3.384	0.288	3.999	-154	-340
PSQ-04.250	4.250	3.634	0.288	4.249	-155	-342
PSQ-04.500	4.500	3.884	0.288	4.499	-156	-344
PSQ-04.750	4.750	4.134	0.288	4.749	-157	-346
PSQ-05.000	5.000	4.384	0.288	4.998	-158	-348
PSQ-05.250	5.250	4.634	0.288	5.248	-159	-350
PSQ-05.500	5.500	4.660	0.375	5.498	-252	-426
PSQ-05.750	5.750	4.910	0.375	5.748	-254	-428
PSQ-06.000	6.000	5.160	0.375	5.998	-256	-430
PSQ-06.500	6.500	5.660	0.375	6.498	-259	-434
PSQ-07.000	7.000	6.160	0.375	6.998	-261	-437
PSQ-07.500	7.500	6.660	0.375	7.498	-263	-439
PSQ-08.000	8.000	7.160	0.375	7.998	-265	-441
PSQ-09.000	9.000	8.160	0.375	8.998	-269	-445
PSQ-10.000	10.000	9.160	0.375	9.998	-273	-447

Compound information available on pages 20-37.

Surface Finish: ISO 4287 & Chamfer Information on pages 7-9.
For ISO tolerance charts, refer to pages 12-13.

MFPSEALS
www.mfpseals.com

PT - (2 PC.) Piston Seal

A product of MFP Seals.

PT - (2 PC.) PISTON SEAL

PT - (2 PC.) Piston Seal rings are made with reinforced PTFE and are supplied with an O-Ring expander. A heavier version of the square or midsize style, the rectangular ring is more stable, and able to seal at elevated pressures. MFP Seals' proprietary T5100 filled PTFE rings add additional strength and life compared to other filled PTFE seals.

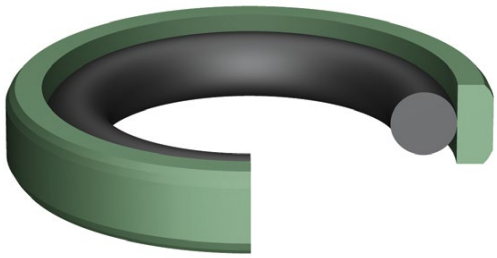

The standard compound for this seal is T5100, with an N6001 O-Ring Expander.

For increased chemical and temperature resistance, other compounds are available (See pages 20-37).

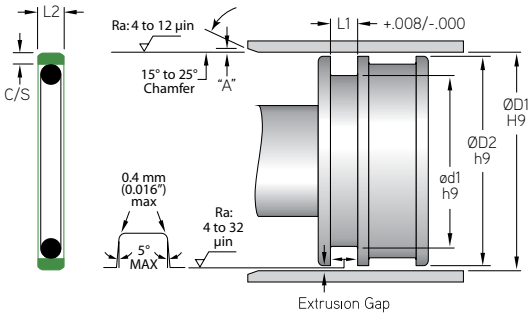

MFP PART NUMBER

PT12-02000-T5100N

SEAL TYPE — ØD1 — COMPOUND

Pressure: 250 bar (3,625 psi) **Max. Velocity:** 4.0 m/s (13 ft./s)

MFP PART NUMBER	PISTON APPLICATION ØD1	ØD2	ød1	L1	L2	SEAL C/S	EXPANDER
TOLERANCE	H9	h9	h9	+.008/-.000			
PT12-02000	2.000	1.999	1.567	.165	.156	.104	OR-222
PT12-02500	2.500	2.499	2.067	.165	.156	.104	OR-226
PT12-02750	2.750	2.749	2.317	.165	.156	.104	OR-228
PT12-03000	3.000	2.999	2.567	.165	.156	.104	OR-230
PT13-03250	3.250	3.249	2.640	.248	.238	.138	OR-334
PT13-03500	3.500	3.499	2.890	.248	.238	.138	OR-336
PT13-04000	4.000	3.999	3.390	.248	.238	.138	OR-340
PT13-04250	4.250	4.249	3.640	.248	.238	.138	OR-342
PT13-04500	4.500	4.499	3.890	.248	.238	.138	OR-344
PT13-05000	5.000	4.999	4.390	.248	.238	.138	OR-348
PT14-05500	5.500	5.499	4.673	.319	.305	.193	OR-426
PT14-06000	6.000	5.999	5.173	.319	.305	.193	OR-430
PT14-06500	6.500	6.499	5.673	.319	.305	.193	OR-434
PT14-07000	7.000	6.999	6.173	.319	.305	.193	OR-437
PT14-07500	7.500	7.499	6.673	.319	.305	.193	OR-439
PT14-08000	8.000	7.999	7.173	.319	.305	.193	OR-441
PT14-09500	9.500	9.499	8.673	.319	.305	.193	OR-446
PT14-10000	10.000	9.999	9.173	.319	.305	.193	OR-447

Surface Finish: ISO 4287 & Chamfer Information on pages 7-9.
For ISO tolerance charts, refer to pages 12-13.

Compound information available on pages 20-37.

PUP - (2 PC.) Piston Seal

A product of MFP Seals.

MFPSEALS®
www.mfpseals.com

PUP - (2 P.C.) PISTON SEAL

The PUP is a bi-directional piston seal for use in medium to heavy hydraulic applications. A centerline-divot in the cap creates a reservoir that retains fluid from each cycle, which reduces breakaway and friction. Designed to retrofit o-ring grooves, in linear applications, this seal can also be used as a low-speed rotary seal. This two-part seal consists of a Urethane cap and Nitrile expander.

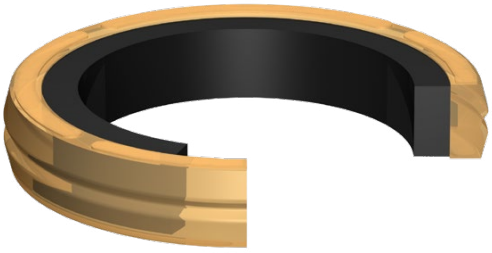

The standard compounds for the Piston Seal are U2161 and U4160, with an N6001 Expander. Other compounds are available.

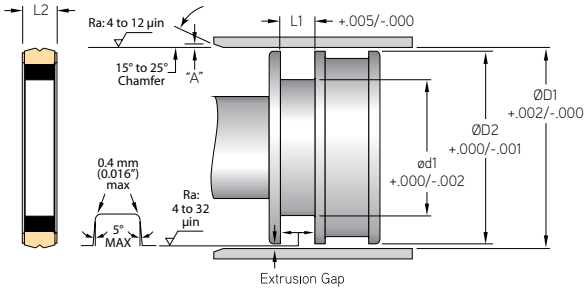

MFP PART NUMBER

PUP-210U4160N

SEAL TYPE | ØD1 | CAP | EXPANDER

U2161 & U4160 - Pressure: 482 bar (7,000 psi) **Max. Velocity:** 0.5 m/s (<1.6 ft./s)

	PISTON APPLICATION			
MFP PART NUMBER	ØD1	ØD2	ød1	L1
TOLERANCE	+.002/-.000	+.000/-.001	+.000/-.002	+0.005/-0.000
PUP-210	1.000	0.997	0.758	0.187
PUP-218	1.500	1.497	1.258	0.187
PUP-220	1.625	1.622	1.383	0.187
PUP-222	1.750	1.747	1.508	0.187
PUP-326	2.000	1.997	1.630	0.281
PUP-328	2.250	2.247	1.880	0.281
PUP-330	2.500	2.497	2.130	0.281
PUP-332	2.750	2.747	2.380	0.281
PUP-334	3.000	2.997	2.630	0.281
PUP-336	3.250	3.247	2.880	0.281
PUP-338	3.500	3.497	3.130	0.281
PUP-340	3.750	3.747	3.380	0.281
PUP-342	4.000	3.997	3.630	0.281
PUP-344	4.250	4.247	3.880	0.281
PUP-346	4.500	4.497	4.130	0.281
PUP-348	4.750	4.747	4.380	0.281
PUP-350	5.000	4.997	4.630	0.281
PUP-427	5.250	5.248	4.778	0.375
PUP-429	5.500	5.498	5.028	0.375
PUP-431	5.750	5.748	5.278	0.375
PUP-433	6.000	5.998	5.528	0.375
PUP-437	6.500	6.498	6.028	0.375
PUP-439	7.000	6.998	6.528	0.375
PUP-441	7.500	7.498	7.028	0.375
PUP-443	8.000	7.998	7.528	0.375

Compound information available on pages 20-37.

Surface Finish: ISO 4287 & Chamfer Information on pages 7-9.
For ISO tolerance charts, refer to pages 12-13.

MFP SEALS
www.mfpseals.com

RS11 - (2 PC.) Rotary Piston Seal

A product of MFP Seals.

RS11 - (2 P.C.) ROTARY PISTON SEAL

MFP Seals' RS11 rotary piston seal is used in light to medium duty oscillating applications. The RS11 design is ideal because of its low friction and long wear capabilities.

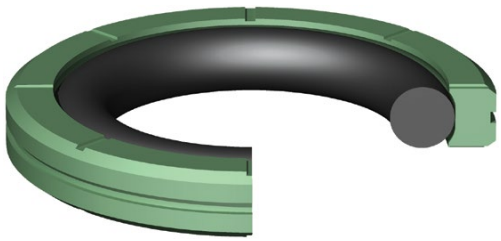

The standard compound for this seal is T5100 Piston Seal, with an N6001 O-Ring expander.

For increased chemical and temperature resistance, other compounds are available (See pages 20-37).

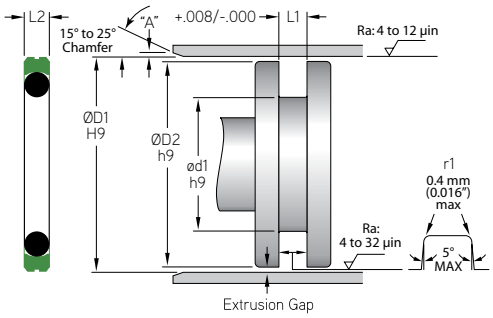

MFP PART NUMBER

RS11-0375x0T5100N

SEAL TYPE | ØD1 | EXPANDER SERIES | COMPOUND | EXPANDER COMPOUND

Pressure: 200 bar (3,000 psi) **Max. Velocity:** 1.0 m/s (3 ft./s)

MFP PART NUMBER	PISTON APPLICATION ØD1	ød1	L1	ØD2	O-Ring DASH NO.
TOLERANCE	H9	h9	+.008/-.000	h9	
RS11-0500X0	0.500	0.307	0.087	0.499	-011
RS11-0563X0	0.563	0.370	0.087	0.562	-012
RS11-0625X0	0.625	0.432	0.087	0.624	-013
RS11-0688X0	0.688	0.495	0.087	0.687	-014
RS11-0750X0	0.750	0.557	0.087	0.749	-015
RS11-0813X0	0.813	0.620	0.087	0.812	-016
RS11-0875X0	0.875	0.682	0.087	0.874	-017
RS11-0937X0	0.938	0.745	0.087	0.937	-018
RS11-1000X0	1.000	0.807	0.087	0.999	-019
RS11-1125X0	1.125	0.932	0.087	1.124	-021
RS11-1250X0	1.250	1.057	0.087	1.249	-023
RS11-1375X0	1.375	1.182	0.087	1.374	-025
RS11-1500X1	1.500	1.205	0.126	1.499	-123
RS11-1625X1	1.625	1.330	0.126	1.624	-125
RS11-1750X1	1.750	1.455	0.126	1.749	-127
RS11-1875X1	1.875	1.580	0.126	1.874	-129
RS11-2000X1	2.000	1.705	0.126	1.999	-131
RS11-2125X1	2.125	1.830	0.126	2.124	-133
RS11-2250X1	2.250	1.955	0.126	2.249	-135
RS11-2375X1	2.375	2.080	0.126	2.374	-137
RS11-2500X1	2.500	2.205	0.126	2.499	-139
RS11-2625X1	2.625	2.330	0.126	2.624	-141
RS11-2750X1	2.750	2.455	0.126	2.749	-143
RS11-2875X1	2.875	2.580	0.126	2.874	-145

Surface Finish: ISO 4287 & Chamfer Information on pages 7-9.
For ISO tolerance charts, refer to pages 12-13.

Compound information available on pages 20-37.

RS11 - (2 PC.) Rotary Piston Seal

A product of MFP Seals.

MFPSEALS®
www.mfpseals.com

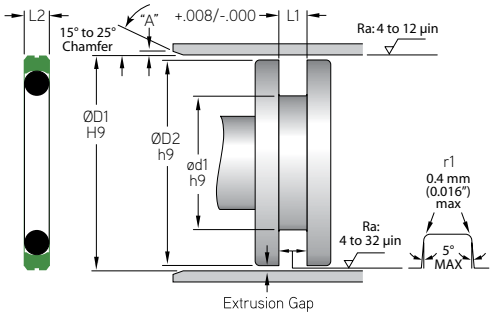

MFP PART NUMBER	PISTON APPLICATION ØD1	ød1	L1	ØD2	O-Ring DASH NO.
TOLERANCE	H9	h9	+.008/-.000	h9	
RS11-3000X2	3.000	2.567	0.165	2.999	-230
RS11-3125X2	3.125	2.692	0.165	3.124	-231
RS11-3250X2	3.250	2.817	0.165	3.249	-232
RS11-3375X2	3.375	2.942	0.165	3.374	-233
RS11-3500X2	3.500	3.067	0.165	3.499	-234
RS11-3625X2	3.625	3.192	0.165	3.624	-235
RS11-3750X2	3.750	3.317	0.165	3.749	-236
RS11-3875X2	3.875	3.442	0.165	3.874	-237
RS11-4000X2	4.000	3.567	0.165	3.999	-238
RS11-4125X2	4.125	3.692	0.165	4.124	-239
RS11-4250X2	4.250	3.817	0.165	4.249	-240
RS11-4375X2	4.375	3.942	0.165	4.374	-241
RS11-4500X2	4.500	4.067	0.165	4.499	-242
RS11-4625X2	4.625	4.192	0.165	4.624	-243
RS11-4750X2	4.750	4.317	0.165	4.749	-244
RS11-4875X2	4.875	4.442	0.165	4.874	-245
RS11-5000X2	5.000	4.567	0.165	4.999	-246
RS11-5125X2	5.125	4.692	0.165	5.124	-247
RS11-5250X2	5.250	4.817	0.165	5.249	-248
RS11-5375X2	5.375	4.942	0.165	5.374	-249
RS11-5500X2	5.500	5.067	0.165	5.499	-250
RS11-5625X2	5.625	5.192	0.165	5.624	-251
RS11-5750X2	5.750	5.317	0.165	5.749	-252
RS11-5875X2	5.875	5.442	0.165	5.874	-253
RS11-6000X3	6.000	5.390	0.248	5.999	-355
RS11-6250X3	6.250	5.640	0.248	6.249	-357
RS11-6500X3	6.500	5.890	0.248	6.499	-359
RS11-6750X3	6.750	6.140	0.248	6.749	-361
RS11-7000X3	7.000	6.390	0.248	6.999	-362
RS11-7250X3	7.250	6.640	0.248	7.248	-363
RS11-7500X3	7.500	6.890	0.248	7.498	-364
RS11-7750X3	7.750	7.140	0.248	7.748	-365
RS11-8000X3	8.000	7.390	0.248	7.998	-366
RS11-8250X3	8.250	7.640	0.248	8.248	-367
RS11-8500X3	8.500	7.890	0.248	8.498	-368

Compound information available on pages 20-37.

Surface Finish: ISO 4287 & Chamfer Information on pages 7-9.
For ISO tolerance charts, refer to pages 12-13.

MFPSEALS®
www.mfpseals.com

RS11 - (2 PC.) Rotary Piston Seal

A product of MFP Seals.

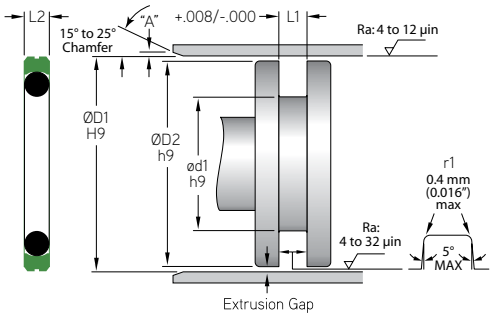

MFP PART NUMBER	PISTON APPLICATION ØD1	ød1	L1	ØD2	O-Ring DASH NO.
TOLERANCE	H9	h9	+.008/-.000	h9	
RS11-8750X3	8.750	8.140	0.248	8.748	-369
RS11-9000X3	9.000	8.390	0.248	8.998	-370
RS11-9250X3	9.250	8.640	0.248	9.248	-371
RS11-9500X3	9.500	8.890	0.248	9.498	-372
RS11-9750X3	9.750	9.140	0.248	9.748	-373
RS11-10000X3	10.000	9.390	0.248	9.998	-374
RS11-10500X3	10.500	9.890	0.248	10.498	-376
RS11-11000X3	11.000	10.390	0.248	10.998	-377
RS11-11500X3	11.500	10.890	0.248	11.498	-378
RS11-12000X4	12.000	11.173	0.319	11.998	-451
RS11-12500X4	12.500	11.673	0.319	12.498	-452
RS11-13000X4	13.000	12.173	0.319	12.998	-453
RS11-13500X4	13.500	12.673	0.319	13.498	-454
RS11-14000X4	14.000	13.173	0.319	13.998	-455
RS11-14500X4	14.500	13.673	0.319	14.498	-456
RS11-15000X4	15.000	14.173	0.319	14.998	-457
RS11-15500X4	15.500	14.673	0.319	15.498	-458
RS11-16000X4	16.000	15.173	0.319	15.998	-459
RS11-16500X4	16.500	15.673	0.319	16.498	-460
RS11-17000X4	17.000	16.173	0.319	16.998	-461
RS11-17500X4	17.500	16.673	0.319	17.498	-462
RS11-18000X4	18.000	17.173	0.319	17.998	-463
RS11-18500X4	18.500	17.673	0.319	18.498	-464
RS11-19000X4	19.000	18.173	0.319	18.998	-465
RS11-19500X4	19.500	18.673	0.319	19.498	-466
RS11-20000X4	20.000	19.173	0.319	19.998	-467

Surface Finish: ISO 4287 & Chamfer Information on pages 7-9.
For ISO tolerance charts, refer to pages 12-13.

Compound information available on pages 20-37.

Step Cut - (2 PC.) Piston Seal

A product of MFP Seals.

MFPSEALS®
www.mfpseals.com

STEP CUT - (2 PC.) PISTON SEAL

Nylon® Step Cut Piston Rings are double acting seals which are easy to install and work well when travelling over ports. Oval expander included.

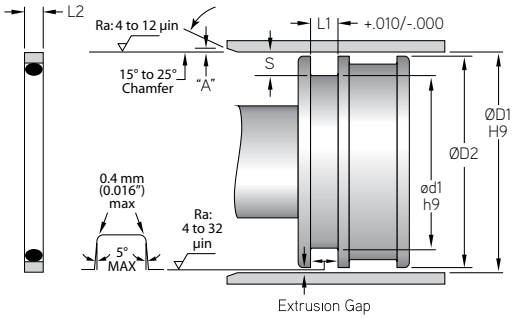

Also available with an optional square expander.

MFP PART NUMBER

SCP-2000-282M1005/N6001

SEAL TYPE | ØD1 | GLAND HEIGHT | COMPOUND | EXPANDER

Pressure: 690 bar (10,000 psi) **Max. Velocity:** 1.0 m/s (3 ft./s)

	PISTON APPLICATION				
MFP PART NUMBER	ØD1	ød1	S	L2	L1
TOLERANCE	H9	h9			+.010/–.000
SCP-2000-282	2.000	1.462	.269	.274	.282
SCP-2250-282	2.250	1.712	.269	.274	.282
SCP-2500-282	2.500	1.962	.269	.274	.282
SCP-2500-312	2.500	1.908	.296	.306	.312
SCP-2750-282	2.750	2.212	.269	.274	.282
SCP-3000-282	3.000	2.442	.279	.274	.282
SCP-3000-312	3.000	2.408	.296	.306	.312
SCP-3250-282	3.250	2.692	.279	.274	.282
SCP-3500-282	3.500	2.942	.279	.274	.282
SCP-3500-312	3.500	2.908	.296	.306	.312
SCP-3750-282	3.750	3.192	.279	.274	.282
SCP-4000-282	4.000	3.442	.279	.274	.282
SCP-4000-312	4.000	3.408	.296	.306	.312
SCP-4250-282	4.250	3.692	.279	.274	.282
SCP-4500-282	4.500	3.942	.279	.274	.282
SCP-4500-312	4.500	3.908	.296	.306	.312
SCP-4500-377	4.500	3.740	.380	.370	.377
SCP-4750-282	4.750	4.192	.279	.274	.282
SCP-5000-282	5.000	4.442	.279	.274	.282
SCP-5000-377	5.000	4.240	.380	.370	.377
SCP-5250-377	5.250	4.490	.380	.370	.377
SCP-5500-377	5.500	4.740	.380	.370	.377
SCP-6000-377	6.000	5.240	.380	.370	.377
SCP-6500-377	6.500	5.740	.380	.370	.377
SCP-7000-377	7.000	6.240	.380	.370	.377
SCP-7500-377	7.500	6.740	.380	.370	.377
SCP-8000-377	8.000	7.240	.380	.370	.377
SCP-8500-377	8.500	7.740	.380	.370	.377
SCP-9000-377	9.000	8.124	.438	.370	.377
SCP-9500-377	9.500	8.624	.438	.370	.377
SCP-10000-377	10.000	9.124	.438	.370	.377
SCP-12000-377	12.000	11.124	.438	.370	.377

Compound information available on pages 20-37.

Surface Finish: ISO 4287 & Chamfer Information on pages 7-9.
For ISO tolerance charts, refer to pages 12-13.

MFPSEALS®
www.mfpseals.com

TPR - Rectangular (2 PC.) Piston Seal

A product of MFP Seals.

TPR - RECTANGULAR (2 PC.) PISTON SEAL

TPR Rectangular PTFE rings are made with reinforced PTFE and are supplied with an O-Ring expander. A heavier version of the square or midsize style, the rectangular ring is more stable, and able to seal at elevated pressures. MFP Seals' proprietary T5100 filled PTFE rings add additional strength and life compared to other filled PTFE seals.

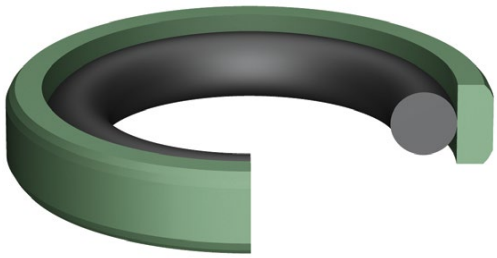

This seal is available in Filled PTFE: T5100, T1125, and T1075, with an N6001, V7100 or V7155 O-Ring Expander.

For increased chemical and temperature resistance, other compounds are available (See pages 20-37).

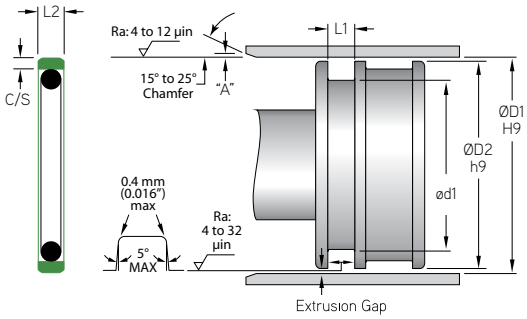

MFP PART NUMBER

MFP-TPR-100T5100N

SEAL TYPE — ØD1 — COMPOUND — EXPANDER COMPOUND

Pressure: 250 bar (3,625 psi) **Max. Velocity:** 4.0 m/s (13 ft./s)

MFP PART NUMBER	PISTON APPLICATION ØD1	ød1	ØD2	L1	L2	C/S	O-Ring DASH NO.
TOLERANCE	H9	+.002/-.002	h9	+.002/-.002	+.002/-.002	+.003/-.003	
MFP-TPR-100	1.000	0.692	0.999	0.129	0.119	0.070	-115
MFP-TPR-125	1.250	0.942	1.249	0.129	0.119	0.070	-119
MFP-TPR-150	1.500	1.192	1.499	0.129	0.119	0.070	-123
MFP-TPR-175	1.750	1.442	1.749	0.129	0.119	0.070	-127
MFP-TPR-200	2.000	1.692	1.999	0.129	0.119	0.070	-131
MFP-TPR-225	2.250	1.942	2.249	0.129	0.119	0.070	-135
MFP-TPR-250	2.500	2.192	2.499	0.129	0.119	0.070	-139
MFP-TPR-275	2.750	2.442	2.749	0.129	0.119	0.070	-143
TOLERANCE	H9	+.002/-.002	h9	+.003/-.003	+.002/-.002	+.003/-.003	
MFP-TPR-300	3.000	2.444	2.998	0.284	0.272	0.090	-333
MFP-TPR-325	3.250	2.694	3.248	0.284	0.272	0.090	-335
MFP-TPR-350	3.500	2.944	3.498	0.284	0.272	0.090	-337
MFP-TPR-375	3.750	3.194	3.748	0.284	0.272	0.090	-339
MFP-TPR-400	4.000	3.444	3.998	0.284	0.272	0.090	-341
MFP-TPR-412	4.125	3.569	4.123	0.284	0.272	0.090	-342
MFP-TPR-425	4.250	3.694	4.248	0.284	0.272	0.090	-343
MFP-TPR-450	4.500	3.944	4.498	0.284	0.272	0.090	-345
MFP-TPR-475	4.750	4.194	4.748	0.284	0.272	0.090	-347
MFP-TPR-500	5.000	4.444	4.998	0.284	0.272	0.090	-349

Surface Finish: ISO 4287 & Chamfer Information on pages 7-9.
For ISO tolerance charts, refer to pages 12-13.

Compound information available on pages 20-37.

TPR - Rectangular (2 PC.) Piston Seal

A product of MFP Seals.

MFPSEALS®
www.mfpseals.com

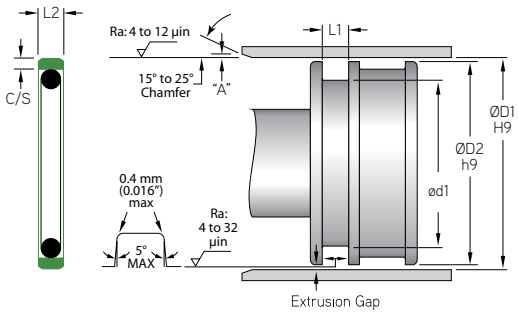

MFP PART NUMBER	PISTON APPLICATION ØD1	ød1	ØD2	L1	L2	C/S	O-Ring DASH NO.
TOLERANCE	H9	+.003/-.003	h9	+.004/-.004	+.002/-.002	+.005/-.005	
MFP-TPR-525	5.250	4.488	5.247	0.379	0.365	0.142	-425
MFP-TPR-550	5.500	4.738	5.497	0.379	0.365	0.142	-427
MFP-TPR-562	5.625	4.863	5.622	0.379	0.365	0.142	-428
MFP-TPR-575	5.750	4.988	5.747	0.379	0.365	0.142	-429
MFP-TPR-600	6.000	5.238	5.997	0.379	0.365	0.142	-431
MFP-TPR-625	6.250	5.488	6.247	0.379	0.365	0.142	-433
MFP-TPR-650	6.500	5.738	6.497	0.379	0.365	0.142	-435
MFP-TPR-675	6.750	5.988	6.747	0.379	0.365	0.142	-437
MFP-TPR-700	7.000	6.238	6.997	0.379	0.365	0.142	-438
MFP-TPR-725	7.250	6.488	7.247	0.379	0.365	0.142	-439
MFP-TPR-750	7.500	6.738	7.497	0.379	0.365	0.142	-440
MFP-TPR-775	7.750	6.988	7.747	0.379	0.365	0.142	-441
MFP-TPR-800	8.000	7.238	7.997	0.379	0.365	0.142	-442
MFP-TPR-825	8.250	7.488	8.247	0.379	0.365	0.142	-443
MFP-TPR-850	8.500	7.738	8.497	0.379	0.365	0.142	-444
MFP-TPR-900	9.000	8.122	8.996	0.379	0.365	0.202	-445
MFP-TPR-950	9.500	8.622	9.496	0.379	0.365	0.202	-446
MFP-TPR-1000	10.000	9.122	9.996	0.379	0.365	0.202	-447
MFP-TPR-1100	11.000	10.122	10.996	0.379	0.365	0.202	-449
MFP-TPR-1200	12.000	11.122	11.996	0.379	0.365	0.202	-451
MFP-TPR-1300	13.000	12.122	12.996	0.379	0.365	0.202	-453
MFP-TPR-1400	14.000	13.122	13.996	0.379	0.365	0.202	-455

Compound information available on pages 20-37.

Surface Finish: ISO 4287 & Chamfer Information on pages 7-9.
For ISO tolerance charts, refer to pages 12-13.

MFPSEALS®
www.mfpseals.com

TPM - Midsize Ring (2 PC.) Piston Seal

A product of MFP Seals.

TPM - MIDSIZE RING (2 PC.) PISTON SEAL

TPM PTFE rings are a rectangular series of piston rings which fill the gap between our square and rectangular series. Our filled PTFE, with it's low coefficient of friction, will reduce frictional heat while the O-Ring expander creates an effective compression seal.

O-Rings expanders are provided with each ring.

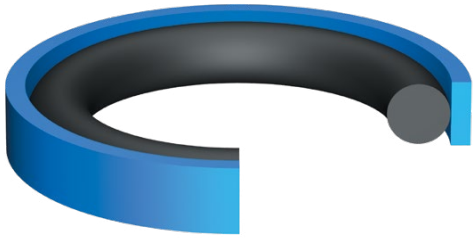

This seal is available in Filled PTFE: T1075, T1125, and T5100, with an N6001, V7100 or V7155 O-Ring Expander.

For increased chemical and temperature resistance, other compounds are available (See pages 20-37).

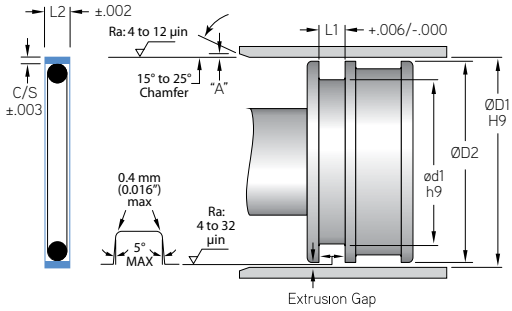

MFP PART NUMBER

MFP-TPM-100T5100N

SEAL TYPE — ØD1 — COMPOUND — EXPANDER COMPOUND

Pressure: 250 bar (3,625 psi) **Max. Velocity:** 4.0 m/s (13 ft./s)

	PISTON APPLICATION					
MFP PART NUMBER	**ØD1**	**ød1**	**L1**	**L2**	**C/S**	**EXPANDER**
TOLERANCE	H9	h9	+.006/-.000	+.002/-.002	+.003/-.003	
MFP-TPM-100	1.000	.787	.094	.090	.058	OR-018
MFP-TPM-112	1.125	.912	.094	.090	.058	OR-020
MFP-TPM-125	1.250	1.037	.094	.090	.058	OR-022
MFP-TPM-137	1.375	1.162	.094	.090	.058	OR-024
MFP-TPM-150	1.500	1.287	.094	.090	.058	OR-026
MFP-TPM-162	1.625	1.412	.094	.090	.058	OR-028
MFP-TPM-175-0	1.750	1.537	.094	.090	.058	OR-030
MFP-TPM-175	1.750	1.473	.126	.122	.062	OR-127
MFP-TPM-187	1.875	1.598	.126	.122	.062	OR-129
MFP-TPM-200	2.000	1.723	.126	.122	.062	OR-131
MFP-TPM-225	2.250	1.937	.126	.122	.062	OR-135
MFP-TPM-237	2.375	2.098	.126	.122	.062	OR-137
MFP-TPM-250	2.500	2.223	.126	.122	.062	OR-139
MFP-TPM-275	2.750	2.348	.157	.152	.092	OR-229
MFP-TPM-300	3.000	2.603	.157	.152	.092	OR-231
MFP-TPM-325	3.250	2.853	.157	.152	.092	OR-233
MFP-TPM-350	3.500	3.103	.157	.152	.092	OR-235
MFP-TPM-375	3.750	3.353	.157	.152	.092	OR-237
MFP-TPM-400	4.000	3.603	.157	.152	.092	OR-239
MFP-TPM-425	4.250	3.853	.157	.152	.092	OR-241

Surface Finish: ISO 4287 & Chamfer Information on pages 7-9.
For ISO tolerance charts, refer to pages 12-13.

Compound information available on pages 20-37.

TPM - Midsize Ring (2 PC.) Piston Seal

A product of MFP Seals.

MFPSEALS®
www.mfpseals.com

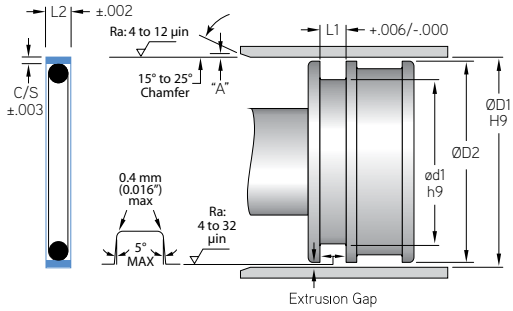

MFP PART NUMBER	PISTON APPLICATION ØD1	ød1	L1	L2	C/S	EXPANDER
TOLERANCE	H9	h9	+.006/-.000	+.002/-.002	+.003/-.003	
MFP-TPM-450	4.500	4.103	.157	.152	.092	OR-243
MFP-TPM-475	4.750	4.353	.157	.152	.092	OR-245
MFP-TPM-500	5.000	4.603	.157	.152	.092	OR-247
MFP-TPM-525	5.250	4.853	.157	.152	.092	OR-249
MFP-TPM-550	5.500	5.103	.157	.152	.092	OR-251
MFP-TPM-575	5.750	5.353	.157	.152	.092	OR-253
MFP-TPM-600	6.000	5.350	.293	.272	.122	OR-355
MFP-TPM-700	7.000	6.350	.293	.272	.122	OR-362

Compound information available on pages 20-37.

Surface Finish: ISO 4287 & Chamfer Information on pages 7-9.
For ISO tolerance charts, refer to pages 12-13.

MFPSEALS®
www.mfpseals.com

TPS - Square (2 PC.) Piston Seal

A product of MFP Seals.

TPS - SQUARE (2 PC.) PISTON SEAL

MFP Seals' TPS Piston seal utilize a square profile to minimize gland space requirements on the piston. For use in bidirectional sealing the proprietary T1075 PTFE sealing element offers a low coefficient of friction while the O-Ring expander creates an effective compression seal. Typical applications are light to medium duty hydraulic cylinders & actuators.

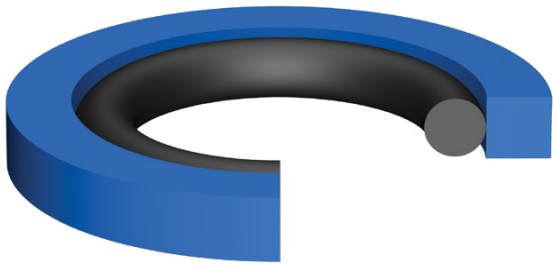

This seal is available in Filled PTFE: T1075, T1125, and T5100, with an N6001, V7100 or V7155 O-Ring Expander.

For increased chemical and temperature resistance, other compounds are available (See pages 20-37).

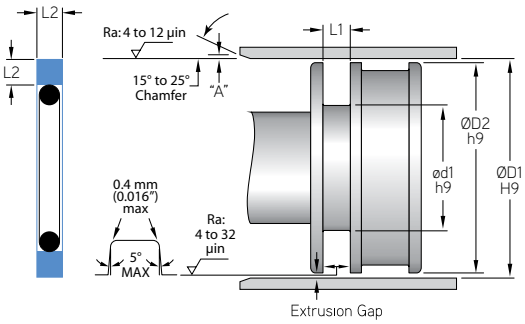

MFP PART NUMBER

MFP-TPS-050T1075N

SEAL TYPE — ØD1 — COMPOUND — EXPANDER COMPOUND

Pressure: 250 bar (3625 psi) **Max. Velocity:** 4.0 m/s (13 ft./s)

MFP PART NUMBER	ØD1	ød1	ØD2	L1	L2	O-Ring DASH NO.
	PISTON APPLICATION					
TOLERANCE	H9	h9	h9	+.001/-.001	+.002/-.002	
MFP-TPS-050	0.500	0.240	0.499	0.083	0.070	-009
MFP-TPS-062	0.625	0.365	0.624	0.083	0.070	-011
MFP-TPS-075	0.750	0.490	0.749	0.083	0.070	-013
MFP-TPS-087	0.875	0.615	0.087	0.083	0.070	-016
MFP-TPS-100	1.000	0.740	0.999	0.083	0.070	-017
MFP-TPS-112	1.125	0.865	1.124	0.083	0.070	-019
MFP-TPS-125	1.250	0.990	1.249	0.083	0.070	-022
MFP-TPS-137	1.375	1.115	1.374	0.083	0.070	-022
MFP-TPS-150	1.500	1.240	1.499	0.083	0.070	-025
TOLERANCE	H9	h9	h9	+.002/-.002	+.002/-.002	
MFP-TPS-156	1.562	1.172	1.561	0.122	0.109	-123
MFP-TPS-162	1.625	1.233	1.624	0.122	0.109	-123
MFP-TPS-168	1.687	1.295	1.686	0.122	0.109	-124
MFP-TPS-175	1.750	1.358	1.749	0.122	0.109	-125
MFP-TPS-187	1.875	1.483	1.874	0.122	0.109	-127
MFP-TPS-200	2.000	1.608	1.999	0.130	0.115	-129
MFP-TPS-212	2.125	1.733	2.124	0.130	0.115	-131
MFP-TPS-225	2.250	1.858	2.249	0.130	0.115	-133
MFP-TPS-237	2.375	1.983	2.374	0.130	0.115	-135

Surface Finish: ISO 4287 & Chamfer Information on pages 7-9.
For ISO tolerance charts, refer to pages 12-13.

Compound information available on pages 20-37.

TPS - Square (2 PC.) Piston Seal

A product of MFP Seals.

MFPSEALS®
www.mfpseals.com

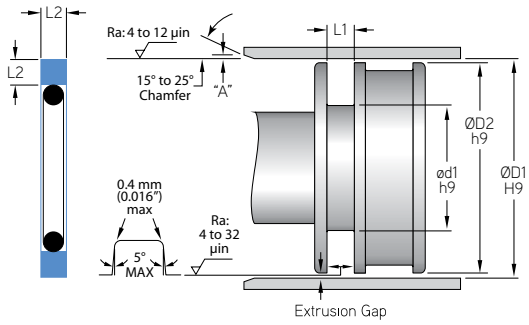

MFP PART NUMBER	PISTON APPLICATION ØD1	ød1	ØD2	L1	L2	O-Ring DASH NO.
TOLERANCE	H9	h9	h9	+.002/-.002	+.002/-.002	
MFP-TPS-250	2.500	2.108	2.499	0.130	0.115	-137
MFP-TPS-262	2.625	2.233	2.624	0.130	0.115	-139
MFP-TPS-275	2.750	2.358	2.749	0.130	0.115	-141
MFP-TPS-287	2.875	2.483	2.874	0.130	0.115	-143
MFP-TPS-300	3.000	2.608	2.999	0.130	0.115	-145
MFP-TPS-325	3.250	2.858	3.249	0.130	0.115	-149
MFP-TPS-337	3.375	2.983	3.374	0.130	0.115	-150
MFP-TPS-350	3.500	3.108	3.499	0.130	0.115	-151
MFP-TPS-362	3.625	3.233	3.624	0.130	0.115	-152
MFP-TPS-375	3.750	3.358	3.749	0.130	0.115	-152
MFP-TPS-400	4.000	3.608	3.999	0.130	0.115	-153
MFP-TPS-425	4.250	3.858	4.249	0.130	0.115	-154
MFP-TPS-450	4.500	4.108	4.499	0.130	0.115	-155
MFP-TPS-475	4.750	4.358	4.749	0.130	0.115	-156
MFP-TPS-487	4.875	4.483	4.874	0.130	0.115	-156
MFP-TPS-500	5.000	4.608	4.999	0.130	0.115	-157
MFP-TPS-525	5.250	4.858	5.249	0.130	0.115	-158
MFP-TPS-550	5.500	5.108	5.499	0.130	0.115	-159
TOLERANCE	H9	h9	h9	+.003/-.003	+.002/-.002	
MFP-TPS-575	5.750	5.232	5.748	0.160	0.143	-251
MFP-TPS-587	5.875	5.357	5.873	0.160	0.143	-252
MFP-TPS-600	6.000	5.482	5.998	0.160	0.143	-253
MFP-TPS-612	6.125	5.607	6.123	0.160	0.143	-254
MFP-TPS-625	6.250	5.732	6.248	0.160	0.143	-255
MFP-TPS-650	6.500	5.982	6.498	0.160	0.143	-257
MFP-TPS-675	6.750	6.232	6.748	0.160	0.143	-258
MFP-TPS-700	7.000	6.482	6.998	0.160	0.143	-259
MFP-TPS-712	7.125	6.607	7.123	0.160	0.143	-260
MFP-TPS-725	7.250	6.732	7.248	0.160	0.143	-260
MFP-TPS-750	7.500	6.982	7.498	0.160	0.143	-261
MFP-TPS-775	7.750	7.232	7.748	0.160	0.143	-262
MFP-TPS-800	8.000	7.482	7.998	0.160	0.143	-263
MFP-TPS-812	8.125	7.607	8.123	0.160	0.143	-264
MFP-TPS-825	8.250	7.732	8.248	0.160	0.143	-264
MFP-TPS-850	8.500	7.982	8.498	0.160	0.143	-265

Compound information available on pages 20-37.

Surface Finish: ISO 4287 & Chamfer Information on pages 7-9.
For ISO tolerance charts, refer to pages 12-13.

MFPSEALS®
www.mfpseals.com

TPS - Square (2 PC.) Piston Seal

A product of MFP Seals.

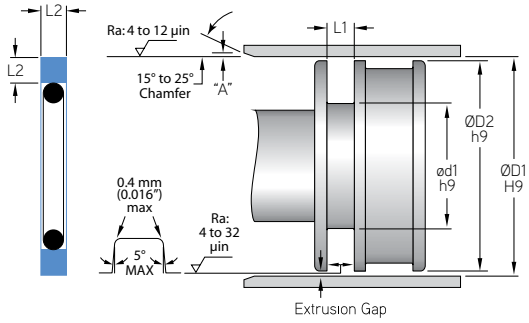

MFP PART NUMBER	PISTON APPLICATION ØD1	ød1	ØD2	L1	L2	O-Ring DASH NO.
TOLERANCE	H9	h9	h9	+.003/-.003	+.002/-.002	
MFP-TPS-875	8.750	8.232	8.748	0.160	0.143	-266
MFP-TPS-900	9.000	8.482	8.998	0.160	0.143	-267
MFP-TPS-925	9.250	8.732	9.248	0.160	0.143	-268
MFP-TPS-950	9.500	8.982	9.498	0.160	0.143	-269
MFP-TPS-975	9.750	9.232	9.748	0.160	0.143	-270
MFP-TPS-1000	10.000	9.482	9.998	0.160	0.143	-271
MFP-TPS-1025	10.250	9.732	10.248	0.160	0.143	-272
MFP-TPS-1050	10.500	9.982	10.498	0.160	0.143	-273
MFP-TPS-1075	10.750	10.232	10.748	0.160	0.143	-274
MFP-TPS-1100	11.000	10.482	10.998	0.160	0.143	-275
MFP-TPS-1150	11.500	10.982	11.498	0.160	0.143	-276
MFP-TPS-1200	12.000	11.482	11.998	0.160	0.143	-277
MFP-TPS-1250	12.500	11.982	12.498	0.160	0.143	-278
MFP-TPS-1300	13.000	12.482	12.998	0.160	0.143	-278
MFP-TPS-1400	14.000	13.482	13.998	0.160	0.143	-279
MFP-TPS-1500	15.000	14.482	14.998	0.160	0.143	-280
MFP-TPS-1600	16.000	15.482	15.998	0.160	0.143	-281

Surface Finish: ISO 4287 & Chamfer Information on pages 7-9.
For ISO tolerance charts, refer to pages 12-13.

Compound information available on pages 20-37.

BRS - Rod Buffer Seal

A product of MFP Seals.

MFPSEALS
www.mfpseals.com

BRS - ROD BUFFER SEAL

MFP Seals' BRS is designed for use as a buffer seal or as the primary sealing element. When used as a buffer seal a primary rod seal would be designed into the groove downstream of the pressure. The BRS seal is composed of a two piece design consisting of a filled PTFE ring along with a rubber energizer. The BRS offers low friction and long life do to its material composition.

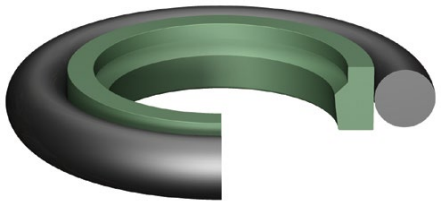

This seal is available in T1125 and T5100, with an N6001, V7100 or V7155 O-Ring Expander.

For increased chemical and temperature resistance, other compounds are available (See pages 20-37).

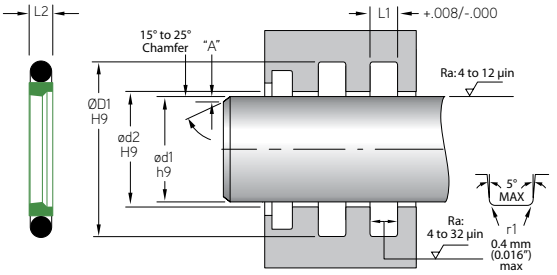

MFP PART NUMBER

BRS1375x2T5100N

SEAL TYPE — ød1 — EXPANDER SERIES — COMPOUND — EXPANDER COMPOUND

Pressure: 350 bar (5,000 psi) **Max. Velocity:** 4.0 m/s (13 ft./s)

BUFFER RINGS

MFP PART NUMBER	ød1	ØD1	ROD APPLICATION L1	ød2	O-Ring DASH NO.
TOLERANCE	h9	H9	+.008/-.000	H9	
BRS0437X1	0.438	0.724	0.126	0.439	-113
BRS0500X1	0.500	0.786	0.126	0.501	-114
BRS0562X1	0.563	0.849	0.126	0.564	-115
BRS0625X1	0.625	0.911	0.126	0.626	-116
BRS0687X1	0.687	0.974	0.126	0.689	-117
BRS0750X1	0.750	1.036	0.126	0.751	-118
BRS0875X1	0.875	1.161	0.126	0.876	-120
BRS1000X1	1.000	1.286	0.126	1.001	-122
BRS1125X1	1.125	1.411	0.126	1.126	-124
BRS1250X1	1.250	1.536	0.126	1.251	-126
BRS1375X1	1.375	1.661	0.126	1.376	-128
BRS1500X1	1.500	1.786	0.126	1.501	-130
BRS1750X1	1.750	2.036	0.126	1.751	-134
BRS0750X2	0.750	1.170	0.165	0.751	-213
BRS0812X2	0.813	1.233	0.165	0.814	-214
BRS0875X2	0.875	1.295	0.165	0.876	-215
BRS0937X2	0.938	1.358	0.165	0.939	-216
BRS1000X2	1.000	1.420	0.165	1.001	-217
BRS1062X2	1.063	1.483	0.165	1.064	-218
BRS1125X2	1.125	1.545	0.165	1.126	-219
BRS1187X2	1.188	1.608	0.165	1.189	-220
BRS1250X2	1.250	1.670	0.165	1.251	-221
BRS1312X2	1.313	1.733	0.165	1.314	-222
BRS1375X2	1.375	1.795	0.165	1.376	-222

Compound information available on pages 20-37.

Surface Finish: ISO 4287 & Chamfer Information on pages 7-9.
For ISO tolerance charts, refer to pages 12-13.

MFPSEALS®
www.mfpseals.com

BRS - Rod Buffer Seal

A product of MFP Seals.

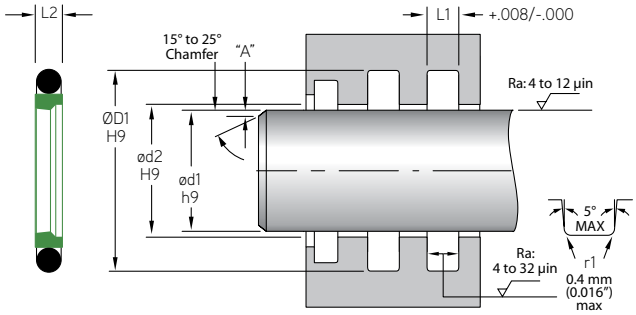

MFP PART NUMBER	ød1	ØD1	ROD APPLICATION L1	ød2	O-Ring DASH NO.
TOLERANCE	h9	H9	+.008/-.000	H9	
BRS1437X2	1.438	1.859	0.165	1.439	-223
BRS1500X2	1.500	1.921	0.165	1.501	-223
BRS1750X2	1.750	2.171	0.165	1.751	-225
BRS1875X2	1.875	2.296	0.165	1.871	-226
BRS2000X2	2.000	2.421	0.165	2.001	-227
BRS2250X2	2.250	2.671	0.165	2.251	-229
BRS2500X2	2.500	2.921	0.165	2.501	-231
BRS2750X2	2.750	3.171	0.165	2.751	-233
BRS3000X2	3.000	3.421	0.165	3.001	-235
BRS3500X2	3.500	3.921	0.165	3.501	-239
BRS4000X2	4.000	4.421	0.165	4.001	-243
BRS4500X2	4.500	4.921	0.165	4.501	-247
BRS1500X3	1.500	2.094	0.248	1.501	-327
BRS1562X3	1.563	2.157	0.248	1.564	-327
BRS1625X3	1.625	2.219	0.248	1.626	-328
BRS1687X3	1.688	2.282	0.248	1.689	-328
BRS1750X3	1.750	2.344	0.248	1.751	-329
BRS1812X3	1.813	2.407	0.248	1.814	-329
BRS1875X3	1.875	2.469	0.248	1.876	-330
BRS1937X3	1.938	2.532	0.248	1.939	-330
BRS2000X3	2.000	2.594	0.248	2.001	-331
BRS2125X3	2.125	2.719	0.248	2.126	-332
BRS2250X3	2.250	2.844	0.248	2.251	-333
BRS2375X3	2.375	2.969	0.248	2.376	-334
BRS2500X3	2.500	3.094	0.248	2.501	-335
BRS2625X3	2.625	3.219	0.248	2.626	-336
BRS2750X3	2.750	3.344	0.248	2.751	-337
BRS2875X3	2.875	3.469	0.248	2.876	-338
BRS3000X3	3.000	3.594	0.248	3.001	-339
BRS3125X3	3.125	3.719	0.248	3.126	-340
BRS3250X3	3.250	3.844	0.248	3.251	-341
BRS3375X3	3.375	3.969	0.248	3.376	-342
BRS3500X3	3.500	4.094	0.248	3.501	-343
BRS3625X3	3.625	4.219	0.248	3.626	-344
BRS3750X3	3.750	4.344	0.248	3.751	-345
BRS3875X3	3.875	4.469	0.248	3.876	-346

Surface Finish: ISO 4287 & Chamfer Information on pages 7-9.
For ISO tolerance charts, refer to pages 12-13.

Compound information available on pages 20-37.

BRS - Rod Buffer Seal

A product of MFP Seals.

MFPSEALS®
www.mfpseals.com

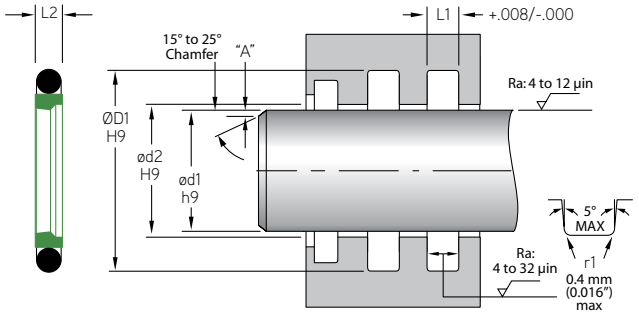

MFP PART NUMBER	ød1	ØD1	ROD APPLICATION L1	ød2	O-Ring DASH NO.
TOLERANCE	h9	H9	+.008/-.000	H9	
BRS4000X3	4.000	4.594	0.248	4.001	-347
BRS4125X3	4.125	4.719	0.248	4.126	-348
BRS4250X3	4.250	4.844	0.248	4.251	-349
BRS4375X3	4.375	4.969	0.248	4.376	-350
BRS4500X3	4.500	5.094	0.248	4.501	-351
BRS4625X3	4.625	5.219	0.248	4.626	-352
BRS4750X3	4.750	5.344	0.248	4.752	-353
BRS4875X3	4.875	5.469	0.248	4.877	-354
BRS5000X3	5.000	5.594	0.248	5.002	-355
BRS5125X3	5.125	5.719	0.248	5.127	-356
BRS5250X3	5.250	5.844	0.248	5.252	-357
BRS5375X3	5.375	5.969	0.248	5.377	-358
BRS5500X3	5.500	6.094	0.248	5.502	-359
BRS5625X3	5.625	6.219	0.248	5.627	-360
BRS5750X3	5.750	6.344	0.248	5.752	-361
BRS6000X3	6.000	6.594	0.248	6.002	-362
BRS6250X3	6.250	6.844	0.248	6.252	-363
BRS6500X3	6.500	7.094	0.248	6.502	-364
BRS6750X3	6.750	7.344	0.248	6.752	-365
BRS7000X3	7.000	7.594	0.248	7.002	-366
BRS7250X3	7.250	7.844	0.248	7.252	-367
BRS7500X3	7.500	8.094	0.248	7.502	-368
BRS7750X3	7.750	8.344	0.248	7.752	-369
BRS8000X3	8.000	8.594	0.248	8.002	-370
BRS4000X4	4.000	4.807	0.319	4.001	-424
BRS4250X4	4.250	5.057	0.319	4.251	-426
BRS4500X4	4.500	5.307	0.319	4.501	-428
BRS4750X4	4.750	5.557	0.319	4.752	-430
BRS5000X4	5.000	5.807	0.319	5.002	-432
BRS5250X4	5.250	6.057	0.319	5.252	434
BRS5500X4	5.500	6.307	0.319	5.502	-436
BRS5750X4	5.750	6.557	0.319	5.752	-437
BRS6000X4	6.000	6.807	0.319	6.002	-438
BRS6250X4	6.250	7.057	0.319	6.252	-439
BRS6500X4	6.500	7.307	0.319	6.502	-440
BRS6750X4	6.750	7.557	0.319	6.752	-441

Compound information available on pages 20-37.

Surface Finish: ISO 4287 & Chamfer Information on pages 7-9.
For ISO tolerance charts, refer to pages 12-13.

MFPSEALS®
www.mfpseals.com

BRS - Rod Buffer Seal

A product of MFP Seals.

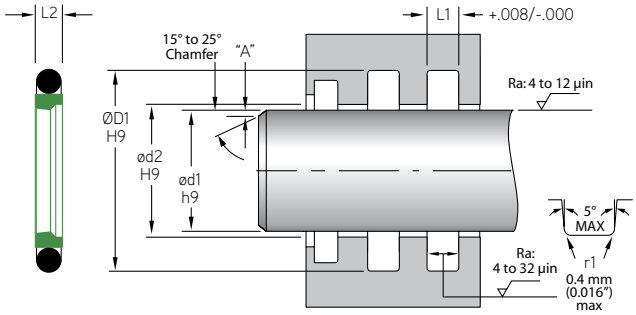

MFP PART NUMBER	ød1	ØD1	ROD APPLICATION L1	ød2	O-Ring DASH NO.
TOLERANCE	h9	H9	+.008/-.000	H9	
BRS7000X4	7.000	7.806	0.319	7.002	-442
BRS7250X4	7.250	8.056	0.319	7.252	-443
BRS7500X4	7.500	8.306	0.319	7.502	-444
BRS7750X4	7.750	8.556	0.319	7.752	-445
BRS8000X4	8.000	8.806	0.319	8.003	-445
BRS8250X4	8.250	9.056	0.319	8.253	-446
BRS8500X4	8.500	9.306	0.319	8.503	-446
BRS8750X4	8.750	9.556	0.319	8.753	-447
BRS9000X4	9.000	9.806	0.319	9.003	-447
BRS9250X4	9.250	10.056	0.319	9.253	-448
BRS9500X4	9.500	10.306	0.319	9.503	-448
BRS9750X4	9.750	10.556	0.319	9.753	-449
BRS10000X4	10.000	10.944	0.319	10.003	-450
BRS10500X4	10.500	11.444	0.319	10.503	-451
BRS11000X4	11.000	11.944	0.319	11.003	-452
BRS11500X4	11.500	12.444	0.319	11.503	-453
BRS12000X4	12.000	12.944	0.319	12.003	-454
BRS12500X4	12.500	13.444	0.319	12.503	-454
BRS13000X4	13.000	13.944	0.319	13.003	-455
BRS13500X4	13.500	14.444	0.319	13.503	-456
BRS14000X4	14.000	14.944	0.319	14.003	-457
BRS14500X4	14.500	15.444	0.319	14.503	-458
BRS15000X4	15.000	15.944	0.319	15.003	-459
BRS15500X4	15.500	16.444	0.319	15.503	-460
BRS16000X4	16.000	16.944	0.319	16.003	-461
BRS16500X4	16.500	17.444	0.319	16.503	-462
BRS17000X4	17.000	17.944	0.319	17.003	-463
BRS17500X4	17.500	18.444	0.319	17.503	-464
BRS18000X4	18.000	18.944	0.319	18.003	-465
BRS18500X4	18.500	19.444	0.319	18.503	-466
BRS19000X4	19.000	19.944	0.319	19.003	-467
BRS19500X4	19.500	20.444	0.319	19.503	-468
BRS20000X4	20.000	20.944	0.319	20.003	-469

Surface Finish: ISO 4287 & Chamfer Information on pages 7-9.
For ISO tolerance charts, refer to pages 12-13.

Compound information available on pages 20-37.

BRU - Rod Buffer Seal

A product of MFP Seals.

MFPSEALS
www.mfpseals.com

BRU - Rod Buffer Seal

MFP Seals' BRU is a dual-purpose seal, designed to be both a secondary rod seal and a buffer ring for the primary rod seal. While taking on a large portion of the sealing load, the BRU still allows enough fluid to pass to allow the primary rod seal to energize. The BRU is designed with special relief vents to eliminate pressure traps between the BRU and primary rod seal. Working together with the primary rod seal, the BRU enhances performance in extreme applications. Produced from our U2151 compound the seal offers extremely low compression set and excellent extrusion resistance. For increased pressure rating and extrusion resistance, see the following page.

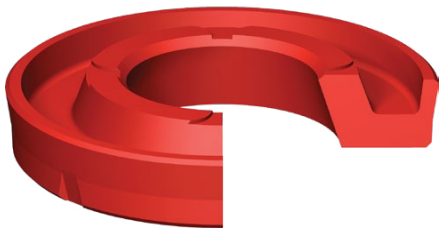

The standard compound for this seal is U2151. It is also available in compounds U2150, U4150.

See next page for a BRU with an M1001 Anti-Extrusion Ring.

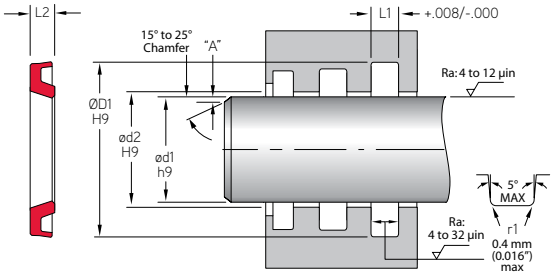

MFP PART NUMBER

BRU-1250X1812X125U2151

SEAL TYPE | ød1 | ØD1 | L1 | SEAL COMPOUND

Pressure: 350 bar (5,000 psi) **Max. Velocity:** 0.5 m/s (< 1.6 ft./s)

MFP PART NUMBER	ROD APPLICATION ød1	ØD1	L1
TOLERANCE	h9	H9	+.010/-.000
BRU-1250X1812X125	1.250	1.812	0.125
BRU-1500X2062X125	1.500	2.062	0.125
BRU-1750X2312X125	1.750	2.312	0.125
BRU-2000X2562X125	2.000	2.562	0.125
BRU-4000X4640X220	4.000	4.640	0.220

Other sizes are available, but may require tooling and additional lead times.

A BRU with an M1001 Anti-Extrusion Ring is available.

Contact the MFP Seals' Engineering Department for more information.

Compound information available on pages 20-37.

Surface Finish: ISO 4287 & Chamfer Information on pages 7-9.
For ISO tolerance charts, refer to pages 12-13.

MFPSEALS®
www.mfpseals.com

BRU - Rod Buffer Seal

A product of MFP Seals.

BRU - Rod Buffer Seal

MFP Seals' BRU is a dual-purpose seal, designed to be both a secondary rod seal and a buffer ring for the primary rod seal. While taking on a large portion of the sealing load, the BRU still allows enough fluid to pass to allow the primary rod seal to energize. The BRU is designed with special relief vents to eliminate pressure traps between the BRU and primary rod seal. Working together with the primary rod seal, the BRU enhances performance in extreme applications. Produced from our U2151 compound the seal offers extremely low compression set and excellent extrusion resistance. Available on most BRU's an M1001 Anti-Extrusion Ring (AER) dramatically increases pressure rating and extrusion resistance of the seal. Some sizes are available without an Anti-Extrusion Ring.

The standard compound for this seal is U2151. It is also available in compounds U2150, U4150. This seal has an M1001 Anti-Extrusion Ring.

See previous page for a BRU without an Anti-Extrusion Ring.

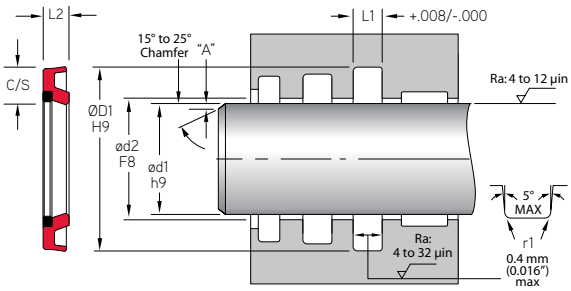

MFP PART NUMBER - AE-RING

BRU-1250X1812X125U2151/M1001

SEAL TYPE | ød1 | ØD1 | L2 | SEAL COMPOUND | AER

Pressure: 690 bar (10,000 psi)* **Max. Velocity:** 1.0 m/s (3.2 ft./s)

**With proper gap and guide elements, contact MFP Seals Engineering Department for gland design assistance.*

MAXIMUM EXTRUSION GAP RECOMMENDATION

ANTI-EXTRUSION RING	PSI (BAR)			
INCH C/S	2300 (160)	3600 (250)	5800 (400)	10000 (690)*
0.308	0.030	0.024	0.016	0.006
0.312	0.030	0.024	0.016	0.006
0.343	0.030	0.024	0.016	0.006

NOTE: The above data are maximum values for extrusion gap. Material type, pressure, temperature, speed and extrusion gap will affect extrusion resistance. Maximum values, pressure, speed, temperature and extrusion gap should not be applied continuously nor simultaneously.

	ROD APPLICATION		
MFP PART NUMBER	ød1	ØD1	L1
TOLERANCE	h9	H9	+.010/-.000
BRU-1750X2250X172	1.750	2.250	0.172
BRU-1750X2366X247	1.750	2.366	0.247
BRU-2000X2500X172	2.000	2.500	0.172
BRU-2000X2616X247	2.000	2.616	0.247
BRU-2250X2674X166	2.250	2.674	0.166
BRU-2250X2937X234	2.250	2.937	0.234
BRU-2500X2924X166	2.500	2.924	0.166
BRU-2500X3000X172	2.500	3.000	0.172
BRU-2500X3116X247	2.500	3.116	0.247

Surface Finish: ISO 4287 & Chamfer Information on pages 7-9.
For ISO tolerance charts, refer to pages 12-13.

Compound information available on pages 20-37.

BRU - Rod Buffer Seal

A product of MFP Seals.

MFPSEALS®
www.mfpseals.com

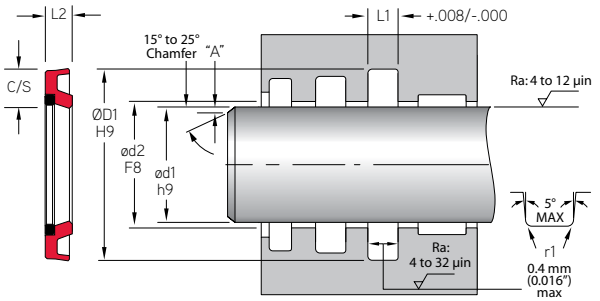

MFP PART NUMBER	ROD APPLICATION ød1	ØD1	L1
TOLERANCE	h9	H9	+.010/-.000
BRU-2750X3366X247	2.750	3.366	0.247
BRU-2750X3375X234	2.750	3.375	0.234
BRU-3000X3500X172	3.000	3.500	0.172
BRU-3000X3616X247	3.000	3.616	0.247
BRU-3500X4000X172	3.500	4.000	0.172
BRU-3500X4116X247	3.500	4.116	0.247
BRU-4000X4500X172	4.000	4.500	0.172
BRU-4000x4616x247	4.000	4.616	0.247
BRU-4500X5000X172	4.500	5.000	0.172
BRU-4500X5116X247	4.500	5.116	0.247
BRU-5000X5616X247	5.000	5.616	0.247
BRU-5500X6116X247	5.500	6.116	0.247
BRU-6000X6616X247	6.000	6.616	0.247
BRU-6500X7116X247	6.500	7.116	0.247
BRU-7000X7616X247	7.000	7.616	0.247
BRU-7500X8116X247	7.500	8.116	0.247
BRU-8000X8616X247	8.000	8.616	0.247

Other sizes are available, but may require tooling and additional lead times.

A BRU without an Anti-Extrusion Ring is available.

Contact the MFP Seals' Engineering Department for more information.

**10,000 psi achieved with max E-gap of .006", contact MFP Engineering for E-Gap information and Gland Design Assistance.*

Compound information available on pages 20-37.

Surface Finish: ISO 4287 & Chamfer Information on pages 7-9.
For ISO tolerance charts, refer to pages 12-13.

MFPSEALS®
www.mfpseals.com

AN Style Rod Wiper

A product of MFP Seals.

AN ROD WIPER

MFP Seals' AN series wipers are light duty snap in wipers that will retrofit into glands prescribed in MS-33675 for corresponding dash numbers of MS-28776. MFP Seals' AN wipers offer a slotted heel to eliminate the possibility of pressure traps between the rod seal and wiper.

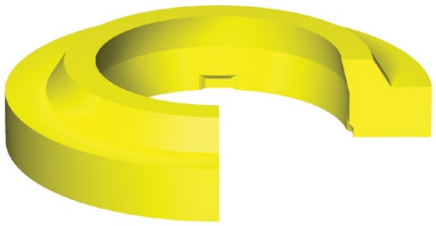

The standard compound for this seal is U2145.
It is also available in U2150, U2151, U2162, U4150 and H2155.

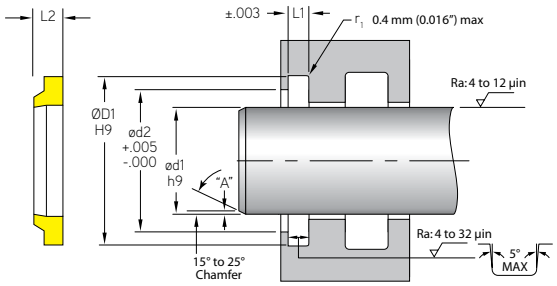

MFP PART NUMBER

AN-01 U2145

SEAL TYPE — DASH # — COMPOUND

Max. Velocity: 0.5 m/s (< 1.6 ft./s)

MFP PART NUMBER	ROD APPLICATION ød1	ØD1	L1	ød2	L2
TOLERANCE	h9	H9	+.003/-.003	+0.005/-0.000	
AN-01	0.500	0.760	0.107	0.647	0.187
AN-02	0.562	0.823	0.107	0.710	0.187
AN-03	0.625	0.885	0.107	0.772	0.187
AN-04	0.687	0.948	0.107	0.834	0.187
AN-05	0.750	1.010	0.107	0.897	0.187
AN-06	0.812	1.084	0.107	0.960	0.187
AN-07	0.875	1.147	0.107	1.023	0.187
AN-08	0.937	1.211	0.107	1.087	0.187
AN-09	1.000	1.272	0.107	1.148	0.187
AN-10	1.062	1.334	0.107	1.210	0.187
AN-11	1.125	1.397	0.107	1.273	0.187
AN-12	1.187	1.459	0.107	1.335	0.187
AN-13	1.250	1.522	0.107	1.398	0.187
AN-14	1.312	1.614	0.107	1.480	0.187
AN-15	1.375	1.677	0.107	1.542	0.187
AN-16	1.437	1.739	0.107	1.605	0.187
AN-17	1.500	1.802	0.107	1.668	0.187
AN-18	1.625	1.927	0.107	1.793	0.187
AN-19	1.750	2.052	0.107	1.918	0.187
AN-20	1.875	2.177	0.107	2.043	0.187
AN-21	2.000	2.302	0.107	2.178	0.187
AN-22	2.125	2.427	0.107	2.303	0.187
AN-23	2.250	2.552	0.107	2.428	0.187
AN-24	2.375	2.677	0.107	2.553	0.187
AN-25	2.500	2.802	0.107	2.678	0.187

Surface Finish: ISO 4287 & Chamfer Information on pages 7-9.
For ISO tolerance charts, refer to pages 12-13.

Compound information available on pages 20-37.

AN Style Rod Wiper

A product of MFP Seals.

MFPSEALS®
www.mfpseals.com

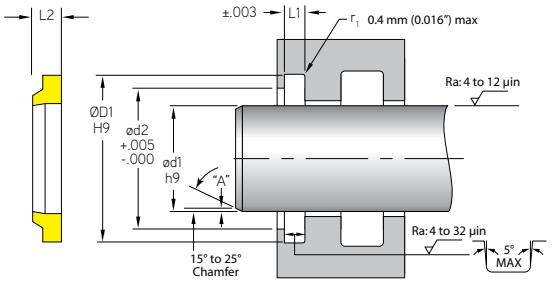

	ROD APPLICATION				
MFP PART NUMBER	ød1	ØD1	L1	ød2	L2
TOLERANCE	h9	H9	+.003/-.003	+0.005/-0.000	
AN-26	2.625	2.989	0.122	2.834	0.211
AN-27	2.750	3.114	0.122	2.959	0.211
AN-28	2.875	3.239	0.122	3.084	0.211
AN-29	3.000	3.364	0.122	3.209	0.211
AN-30	3.125	3.489	0.122	3.334	0.211
AN-31	3.250	3.614	0.122	3.459	0.211
AN-32	3.375	3.739	0.122	3.584	0.211
AN-33	3.500	3.864	0.122	3.709	0.211
AN-34	3.625	3.989	0.122	3.834	0.211
AN-35	3.750	4.114	0.122	3.959	0.211
AN-36	3.875	4.239	0.122	4.084	0.211
AN-37	4.000	4.427	0.138	4.240	0.238
AN-38	4.125	4.552	0.138	4.365	0.238
AN-39	4.250	4.677	0.138	4.490	0.238
AN-40	4.375	4.804	0.138	4.617	0.238
AN-41	4.500	4.927	0.138	4.740	0.238
AN-42	4.625	5.052	0.138	4.865	0.238
AN-43	4.750	5.177	0.138	4.990	0.238
AN-44	4.875	5.304	0.138	5.117	0.238
AN-45	5.000	5.427	0.138	5.240	0.238
AN-46	5.125	5.554	0.138	5.367	0.238
AN-47	5.250	5.677	0.138	5.490	0.238
AN-48	5.375	5.804	0.138	5.617	0.238
AN-49	5.500	5.927	0.138	5.740	0.238
AN-50	5.625	6.116	0.154	5.898	0.264
AN-51	5.750	6.239	0.154	6.022	0.264
AN-52	5.875	6.366	0.154	6.148	0.264
AN-53	6.000	6.489	0.154	6.272	0.264
AN-54	6.250	6.741	0.154	6.524	0.264
AN-55	6.500	6.989	0.154	0.677	0.264
AN-56	6.750	7.239	0.154	7.022	0.264
AN-57	7.000	7.489	0.154	7.272	0.264
AN-58	7.250	7.741	0.154	7.524	0.264
AN-59	7.500	7.989	0.154	7.772	0.264
AN-60	7.750	8.241	0.154	8.024	0.264
AN-61	8.000	8.491	0.154	8.274	0.264
AN-62	8.500	8.989	0.154	8.772	0.264
AN-63	9.000	9.489	0.154	9.272	0.264

Compound information available on pages 20-37.

Surface Finish: ISO 4287 & Chamfer Information on pages 7-9.
For ISO tolerance charts, refer to pages 12-13.

MFPSEALS®
www.mfpseals.com

D Style Rod Wiper

A product of MFP Seals.

D ROD WIPER

MFP Seals' D wipers are designed for use in light to medium duty hydraulic & pneumatic applications. MFP's D wiper offers a slotted heel to eliminate the possibility of pressure traps between the rod seal and wiper.

The standard compound for this seal is U2145.
It is also available in U2150, U2151, U2162, U4150 and H2155.

For compound descriptions and temperature ranges, please refer to pages 26-37.

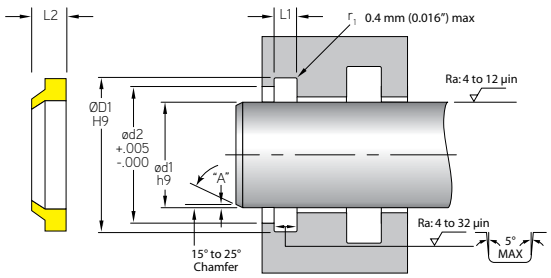

MFP PART NUMBER

D-0250U2145

SEAL TYPE — DASH # — COMPOUND

Max. Velocity: 0.5 m/s (< 1.6 ft./s)

	ROD APPLICATION				
MFP PART NUMBER	**ød1**	**ØD1**	**L1**	**ød2**	**L2**
TOLERANCE	h9	H9	+.004/-.000	+0.005/-0.000	
D-0250	0.250	0.497	0.124	0.410	0.210
D-0312	0.312	0.560	0.124	0.475	0.210
D-0375	0.375	0.622	0.124	0.535	0.210
D-0437	0.437	0.685	0.124	0.600	0.210
D-0500	0.500	0.747	0.124	0.660	0.210
D-0562	0.562	0.810	0.124	0.725	0.210
D-0625	0.625	0.872	0.124	0.785	0.210
D-0687	0.687	0.935	0.124	0.850	0.210
D-0750	0.750	1.122	0.187	0.995	0.305
D-0812	0.812	1.185	0.187	1.060	0.305
D-0875	0.875	1.247	0.187	1.120	0.305
D-0937	0.937	1.310	0.187	1.185	0.305
D-1000	1.000	1.372	0.187	1.245	0.305
D-1062	1.062	1.435	0.187	1.310	0.305
D-1125	1.125	1.497	0.187	1.370	0.305
D-1187	1.187	1.560	0.187	1.435	0.305
D-1250	1.250	1.622	0.187	1.495	0.305
D-1312	1.312	1.687	0.187	1.560	0.305
D-1375	1.375	1.747	0.187	1.620	0.305
D-1437	1.437	1.810	0.187	1.685	0.305
D-1500	1.500	1.872	0.187	1.745	0.305
D-1625	1.625	1.997	0.187	1.870	0.305
D-1687	1.687	2.059	0.187	1.932	0.305

Surface Finish: ISO 4287 & Chamfer Information on pages 7-9.
For ISO tolerance charts, refer to pages 12-13.

Compound information available on pages 20-37.

D Style Rod Wiper

A product of MFP Seals.

MFPSEALS®
www.mfpseals.com

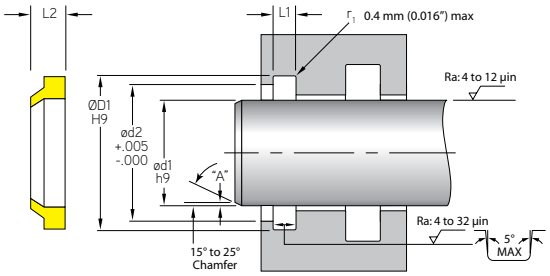

	ROD APPLICATION				
MFP PART NUMBER	ød1	ØD1	L1	ød2	L2
TOLERANCE	h9	H9	+.003/-.003	+0.005/-0.000	
D-1750	1.750	2.122	0.187	1.995	0.305
D-1875	1.875	2.247	0.187	2.120	0.305
D-2000	2.000	2.497	0.249	2.327	0.395
D-2125	2.125	2.622	0.249	2.452	0.395
D-2187	2.187	2.685	0.249	2.515	0.395
D-2250	2.250	2.747	0.249	2.577	0.395
D-2375	2.375	2.872	0.249	2.702	0.395
D-2500	2.500	2.997	0.249	2.827	0.395
D-2562	2.562	3.060	0.249	2.890	0.395
D-2625	2.625	3.122	0.249	2.952	0.395
D-2750	2.750	3.247	0.249	3.077	0.395
D-2875	2.875	3.372	0.249	3.202	0.395
D-3000	3.000	3.497	0.249	3.327	0.395
D-3125	3.125	3.622	0.249	3.452	0.395
D-3250	3.250	3.747	0.249	3.577	0.395
D-3375	3.375	3.872	0.249	3.702	0.395
D-3500	3.500	3.997	0.249	3.827	0.395
D-3625	3.625	4.122	0.249	3.952	0.395
D-3750	3.750	4.247	0.249	4.077	0.395
D-3875	3.875	4.372	0.249	4.202	0.395
D-4000	4.000	4.497	0.249	4.327	0.395
D-4125	4.125	4.622	0.249	4.452	0.395
D-4250	4.250	4.747	0.249	4.577	0.395
D-4375	4.375	4.872	0.249	4.702	0.395
D-4500	4.500	5.247	0.374	4.993	0.585
D-4625	4.625	5.372	0.374	5.118	0.585
D-4750	4.750	5.497	0.374	5.243	0.585
D-4875	4.875	5.622	0.374	5.368	0.585
D-5000	5.000	5.747	0.374	5.493	0.585
D-5250	5.250	5.997	0.374	5.743	0.585
D-5375	5.375	6.122	0.374	5.868	0.585
D-5500	5.500	6.247	0.374	5.993	0.585
D-5625	5.625	6.372	0.374	6.118	0.585
D-5750	5.750	6.497	0.374	6.243	0.585
D-5875	5.875	6.622	0.374	6.368	0.585

Compound information available on pages 20-37.

Surface Finish: ISO 4287 & Chamfer Information on pages 7-9.
For ISO tolerance charts, refer to pages 12-13.

MFPSEALS®
www.mfpseals.com

D Style Rod Wiper

A product of MFP Seals.

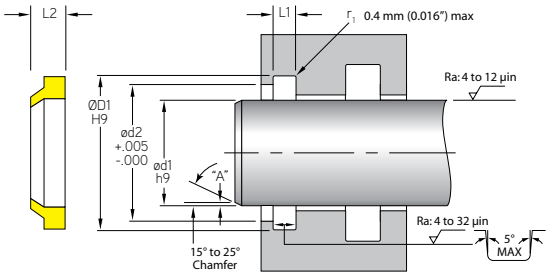

	ROD APPLICATION				
MFP PART NUMBER	**ød1**	**ØD1**	**L1**	**ød2**	**L2**
TOLERANCE	h9	H9	+.003/-.003	+0.005/-0.000	
D-6000	6.000	6.747	0.374	6.493	0.585
D-6250	6.250	6.997	0.374	6.743	0.585
D-6375	6.375	7.122	0.374	6.868	0.585
D-6500	6.500	7.247	0.374	6.993	0.585
D-6750	6.750	7.497	0.374	7.243	0.585
D-6875	6.875	7.622	0.374	7.368	0.585
D-7000	7.000	7.747	0.374	7.493	0.585
D-7250	7.250	7.997	0.374	7.743	0.585
D-7500	7.500	8.247	0.374	7.993	0.585
D-7750	7.750	8.497	0.374	8.243	0.585
D-8000	8.000	8.747	0.374	8.493	0.585
D-8250	8.250	8.997	0.374	8.743	0.585
D-8500	8.500	9.247	0.374	8.993	0.585
D-8750	8.750	9.497	0.374	9.243	0.585
D-9000	9.000	9.747	0.374	9.493	0.585
D-9250	9.250	9.997	0.374	9.743	0.585

Surface Finish: ISO 4287 & Chamfer Information on pages 7-9.
For ISO tolerance charts, refer to pages 12-13.

Compound information available on pages 20-37.

DF Style Rod Wiper

A product of MFP Seals.

MFPSEALS®
www.mfpseals.com

DF ROD WIPER

MFP Seals' DF rod wiper is an aggressive wiper designed to retro-fit D Style housings. Designed for use in harsh environments, particularly for Longwall Mining, Agriculture, Off-Highway, Waste Management, and Forestry use.

MFP's DF wiper offers a vented heel to eliminate the possibility of pressure traps between the rod seal and wiper. DF wipers feature a protective flange to shield the housing from contaminants. Easy to install and available in several compounds to meet your application's needs.

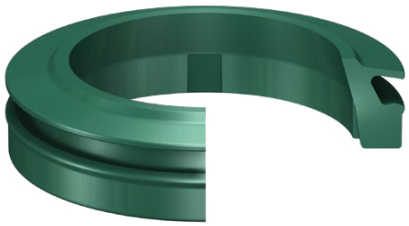

The standard compound for this seal is U2150. It is also available in U2151 and U4150.

For compound descriptions and temperature ranges, please refer to pages 26-37.

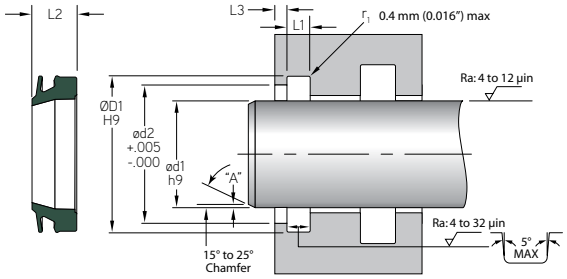

MFP PART NUMBER

DF-1125U2150

SEAL TYPE — DASH # — COMPOUND

For non-standard groove sizes, see MFP Seals' HMW (Inch) or MHMW (Metric) Rod Wiper.

Max. Velocity: 4.0 m/s (< 12 ft./s)

	ROD APPLICATION					
MFP PART NUMBER	**ød1**	**ØD1**	**L1**	**ød2**	**L2**	**L3**
TOLERANCE	h9	H9	+.004/-.000	+0.005/-0.000		
DF-1125	1.125	1.497	0.187	1.370	0.350	0.094
DF-1250	1.250	1.622	0.187	1.495	0.350	0.094
DF-1375	1.375	1.747	0.187	1.620	0.350	0.094
DF-1500	1.500	1.872	0.187	1.745	0.350	0.094
DF-1625	1.625	1.997	0.187	1.870	0.350	0.094
DF-1750	1.750	2.122	0.187	1.995	0.350	0.094
DF-2000	2.000	2.497	0.249	2.327	0.450	0.125
DF-2250	2.250	2.747	0.249	2.577	0.450	0.125
DF-2500	2.500	2.997	0.249	2.827	0.450	0.125
DF-2750	2.750	3.247	0.249	3.077	0.450	0.125
DF-3000	3.000	3.497	0.249	3.327	0.450	0.125
DF-3500	3.500	3.997	0.249	3.827	0.450	0.125
DF-4000	4.000	4.497	0.249	4.327	0.450	0.125
DF-4500	4.500	5.247	0.374	4.993	0.674	0.187
DF-5000	5.000	5.747	0.374	5.493	0.674	0.187
DF-5500	5.500	6.247	0.374	5.993	0.674	0.187
DF-6000	6.000	6.747	0.374	6.493	0.674	0.187
DF-7000	7.000	7.747	0.374	7.493	0.674	0.187

Compound information available on pages 20-37.

Surface Finish: ISO 4287 & Chamfer Information on pages 7-9.
For ISO tolerance charts, refer to pages 12-13.

MFP SEALS
www.mfpseals.com

DM Style Rod Wiper

DM STYLE ROD WIPER

MFP Seals' industry standard, DM Style Rod Wipers are designed to fit into a standard housing and provide heavy duty exclusion of dirt and debris. Designed to ensure maximum contact with the wiping surface, the DM Style Rod Wiper includes an outer diameter sealing lip providing a tailored fit within the housing. A sealing bead is also provided to prevent moisture and contaminants from passing the outside of the wiper. The inside diameter of the wiper has ribbing for pressure relief to prevent blow-out.

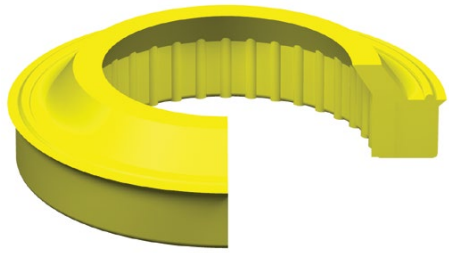

The standard compound for this seal is U2145.
It is also available in U2150, U2151, U4150 and H2155.

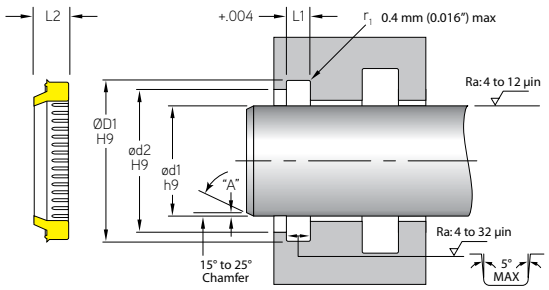

MFP PART NUMBER

DM-0625U2145

SEAL TYPE — ød1 — COMPOUND

Max. Velocity: 0.5 m/s (< 1.6 ft./s)

MFP PART NUMBER	ROD APPLICATION ød1	ØD1	L1	ød2	L2
TOLERANCE	h9	H9	+.004/-.000	+0.005/-0.000	
DM-0625	0.625	0.872	0.124	0.785	0.210
DM-0750	0.750	1.122	0.187	0.995	0.305
DM-0875	0.875	1.247	0.187	1.120	0.305
DM-1000	1.000	1.372	0.187	1.245	0.305
DM-1125	1.125	1.497	0.187	1.370	0.305
DM-1250	1.250	1.622	0.187	1.495	0.305
DM-1375	1.375	1.747	0.187	1.620	0.305
DM-1500	1.500	1.872	0.187	1.745	0.305
DM-1750	1.750	2.122	0.187	1.995	0.305
DM-2000	2.000	2.497	0.249	2.327	0.395
DM-2250	2.250	2.747	0.249	2.577	0.395
DM-2500	2.500	2.997	0.249	2.827	0.395
DM-2750	2.750	3.247	0.249	3.077	0.395
DM-2875	2.875	3.372	0.249	3.202	0.395
DM-3000	3.000	3.497	0.249	3.327	0.395
DM-3375	3.375	3.872	0.249	3.702	0.395
DM-3500	3.500	3.997	0.249	3.827	0.395
DM-4000	4.000	4.497	0.249	4.327	0.395
DM-4500	4.500	5.247	0.374	4.993	0.585
DM-5000	5.000	5.747	0.374	5.493	0.585
DM-5500	5.500	6.247	0.374	5.993	0.585
DM-6000	6.000	6.747	0.374	6.493	0.585

Surface Finish: ISO 4287 & Chamfer Information on pages 7-9.
For ISO tolerance charts, refer to pages 12-13.

Compound information available on pages 20-37.

H Style Rod Wiper

A product of MFP Seals.

MFPSEALS®
www.mfpseals.com

H STYLE ROD WIPER

MFP Seals' H Style Rod Wipers are a one piece snap-in design, for medium duty cycle applications. MFP Seals' H Style Rod wipers are a standard in industrial cylinders with an AN or BV style U-Cup as rod seals. The H Style Rod Wipers feature a wiper/scraper lip as well as a secondary U-Cup which serves as an extra safeguard against leakage.

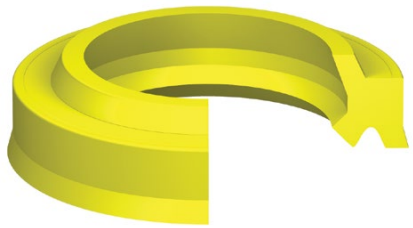

The standard compound for this seal is U2145. It is also available in U2150, U2151, U2162, U4150, H2155, CN80, V7625 and VT90.

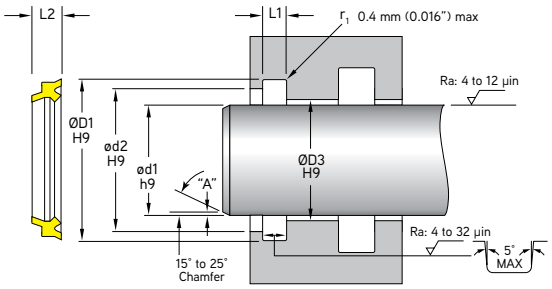

MFP PART NUMBER

H-0250U2145

SEAL TYPE — ød1 — COMPOUND

Max. Velocity: 0.5 m/s (< 1.6 ft./s)

	ROD APPLICATION					
MFP PART NUMBER	ød1	ØD1	L1	ød2	ØD3	L2
TOLERANCE	h9	H9	+0.005/-0.000	H9	H9	
H-0500	0.500	0.802	0.203	0.620	0.501	0.245
H-0625	0.625	0.927	0.203	0.745	0.626	0.245
H-0750	0.750	1.052	0.203	0.870	0.751	0.245
H-0875	0.875	1.240	0.218	1.010	0.876	0.275
H-1000	1.000	1.365	0.218	1.135	1.001	0.275
H-1125	1.125	1.490	0.218	1.260	1.126	0.275
H-1250	1.250	1.615	0.218	1.385	1.251	0.275
H-1375	1.375	1.740	0.218	1.510	1.376	0.275
H-1500	1.500	1.865	0.218	1.635	1.501	0.275
H-1625	1.625	1.990	0.218	1.760	1.626	0.275
H-1750	1.750	2.115	0.218	1.885	1.751	0.275
H-1875	1.875	2.240	0.218	2.010	1.876	0.275
H-2000	2.000	2.365	0.218	2.135	2.001	0.275
H-2125	2.125	2.490	0.218	2.260	2.126	0.275
H-2250	2.250	2.745	0.281	2.385	2.251	0.351
H-2375	2.375	2.870	0.281	2.510	2.376	0.351
H-2500	2.500	2.995	0.281	2.635	2.501	0.351
H-2625	2.625	3.120	0.281	2.760	2.626	0.351
H-2750	2.750	3.245	0.281	2.885	2.751	0.351
H-3000	3.000	3.495	0.281	3.135	3.001	0.351
H-3250	3.250	3.745	0.281	3.385	3.251	0.351
H-3500	3.500	3.995	0.281	3.635	3.501	0.351
H-3750	3.750	4.245	0.281	3.885	3.751	0.351

Compound information available on pages 20-37.

Surface Finish: ISO 4287 & Chamfer Information on pages 7-9.
For ISO tolerance charts, refer to pages 12-13.

MFPSEALS®
www.mfpseals.com

H Style Rod Wiper

A product of MFP Seals.

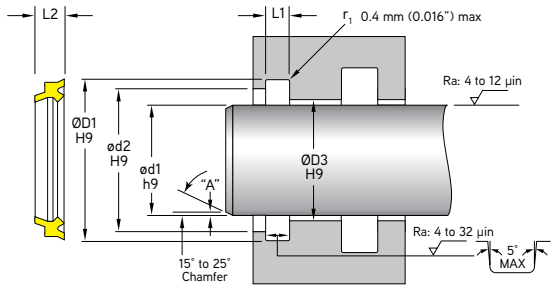

MFP PART NUMBER	ROD APPLICATION					
	ød1	ØD1	L1	ød2	ØD3	L2
TOLERANCE	h9	H9	+0.005/-0.000	H9	H9	
H-4000	4.000	4.495	0.281	4.135	4.001	0.351
H-4250	4.250	4.745	0.281	4.385	4.251	0.351
H-4500	4.500	4.995	0.281	4.635	4.501	0.351
H-4750	4.750	5.245	0.281	4.885	4.751	0.351
H-5000	5.000	5.495	0.281	5.135	5.001	0.351
H-5250	5.250	5.745	0.281	5.385	5.251	0.351
H-5500	5.500	5.995	0.281	5.635	5.501	0.351
H-6000	6.000	6.495	0.281	6.135	6.001	0.351
H-6500	6.500	6.995	0.281	6.635	6.501	0.351
H-7000	7.000	7.495	0.281	7.135	7.001	0.351
H-7500	7.500	7.995	0.281	7.635	7.501	0.351
H-8000	8.000	8.495	0.281	8.135	8.001	0.351
H-8500	8.500	8.995	0.281	8.635	8.501	0.351

Surface Finish: ISO 4287 & Chamfer Information on pages 7-9.
For ISO tolerance charts, refer to pages 12-13.

Compound information
available on pages 20-37.

K Style Rod Wiper

A product of MFP Seals.

MFPSEALS
www.mfpseals.com

K STYLE ROD WIPER

MFP Seals' K Style wipers are a one piece snap-in type rod wiper designed for light duty use in mobile cylinders with an angled retainer. The K Style rod wipers feature a wiper/scraper lip as well as a sealing lip for secondary sealing of the system (Secondary U-Cup).

The standard compound for this seal is U2145.
It is also available in U2150, U2151, U2162, U4150 and H2155.

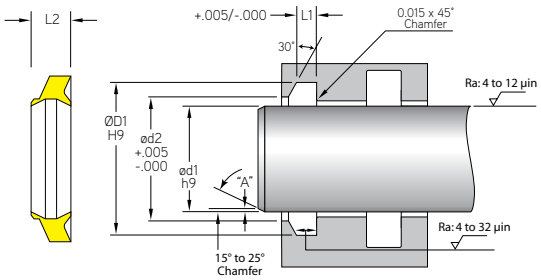

MFP PART NUMBER

K-1375U2145

SEAL TYPE — ød1 — COMPOUND

Max. Velocity: 0.5 m/s (< 1.6 ft./s)

MFP PART NUMBER	ROD APPLICATION ød1	ØD1	L1	ød2	L2
TOLERANCE	h9	H9	+0.005/-0.000	+0.005/-0.000	
K-0500	0.500	0.760	0.155	0.625	0.315
K-0625	0.625	0.885	0.155	0.750	0.315
K-0750	0.750	1.135	0.195	0.832	0.366
K-0875	0.875	1.260	0.195	0.957	0.366
K-1000	1.000	1.385	0.195	1.082	0.366
K-1187	1.187	1.572	0.195	1.269	0.366
K-1250	1.250	1.635	0.195	1.332	0.366
K-1375	1.375	1.760	0.195	1.457	0.366
K-1500	1.500	1.885	0.195	1.582	0.366
K-1625	1.625	2.010	0.195	1.707	0.366
K-1750	1.750	2.135	0.195	1.832	0.366
K-1875	1.875	2.260	0.195	1.957	0.366
K-2000	2.000	2.385	0.195	2.082	0.366
K-2125	2.125	2.510	0.195	2.207	0.366
K-2250	2.250	2.635	0.195	2.332	0.366
K-2251	2.250	2.760	0.255	2.407	0.483
K-2500	2.500	2.885	0.195	2.582	0.366
K-2501	2.500	3.010	0.255	2.657	0.483
K-2750	2.750	3.260	0.255	2.907	0.483
K-3000	3.000	3.385	0.195	3.082	0.366

Compound information available on pages 20-37.

Surface Finish: ISO 4287 & Chamfer Information on pages 7-9.
For ISO tolerance charts, refer to pages 12-13.

MFPSEALS®
www.mfpseals.com

K Style Rod Wiper

A product of MFP Seals.

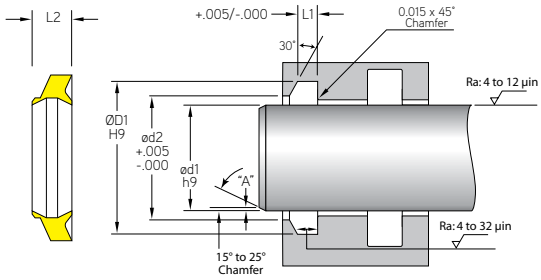

	ROD APPLICATION				
MFP PART NUMBER	**ød1**	**ØD1**	**L1**	**ød2**	**L2**
TOLERANCE	h9	H9	+0.005/-0.000	+0.005/-0.000	
K-3001	3.000	3.510	0.255	3.157	0.483
K-3250	3.250	3.760	0.255	3.407	0.483
K-3500	3.500	3.885	0.195	3.582	0.366
K-3501	3.500	4.010	0.255	3.657	0.483
K-3625	3.625	4.135	0.255	3.782	0.483
K-3750	3.750	4.260	0.255	3.907	0.483
K-4000	4.000	4.510	0.255	4.157	0.483
K-4250	4.250	4.760	0.255	4.407	0.483
K-4500	4.500	5.010	0.255	4.657	0.483
K-4750	4.750	5.260	0.255	4.907	0.483
K-5000	5.000	5.510	0.255	5.157	0.483
K-6000	6.000	6.510	0.255	6.157	0.483
K-6500	6.500	7.010	0.255	6.657	0.483
K-7000	7.000	7.510	0.255	7.157	0.483
K-8000	8.000	8.510	0.255	8.157	0.483
K-8125	8.125	8.635	0.255	8.282	0.483
K-9125	9.125	9.635	0.255	9.282	0.483
K-9375	9.375	9.885	0.255	9.532	0.483

Surface Finish: ISO 4287 & Chamfer Information on pages 7-9.
For ISO tolerance charts, refer to pages 12-13.

Compound information
available on pages 20-37.

MC - Metal Clad Rod Wiper - Nitrile

A product of MFP Seals.

MFPSEALS®
www.mfpseals.com

MC METAL CLAD ROD WIPER

MFP Seals' MC Metal Clad Rod Wipers are designed to handle tough scraping problems such as mud, ice and weld spatter. The seal is constructed of a Nitrile wiping/scraping element which is securely bonded to a heavy duty carbon steel case.

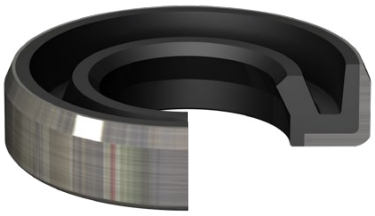

The standard compound for this seal is NBR, with a Carbon Steel case. Other compounds are also available.

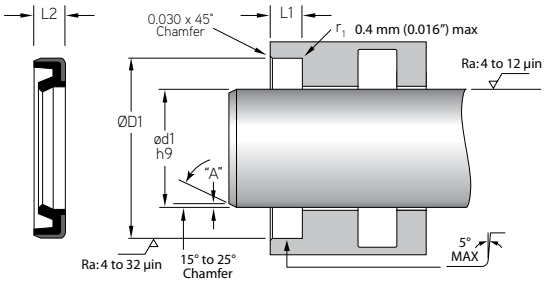

MFP PART NUMBER

MC0750X1250-312N

SEAL TYPE | ød1 | ØD1 | L1 | COMPOUND

Max. Velocity: 0.5 m/s (< 1.6 ft./s)

MFP PART NUMBER	ROD APPLICATION ød1	ØD1	L1
TOLERANCE	h9	+.001/-.001	+.015/-.000
MC0250X0437-125	0.250	0.437	0.125
MC0375X0562-094	0.375	0.563	0.093
MC0375X0625-125	0.375	0.625	0.125
MC0500X0750-125	0.500	0.750	0.125
MC0625X0875-125	0.625	0.875	0.125
MC0625X0937-187	0.625	0.937	0.187
MC0687X1000-187	0.687	1.000	0.187
MC0875X1125-125	0.875	1.125	0.125
MC0875X1250-187	0.875	1.250	0.187
MC1000X1250-125	1.000	1.250	0.125
MC1000X1375-187	1.000	1.375	0.187
MC1000X1500-187	1.000	1.500	0.187
MC1000X1500-312	1.000	1.500	0.312
MC1062X1500-187	1.062	1.500	0.187
MC1125X1375-125	1.125	1.375	0.125
MC1125X1500-187	1.125	1.500	0.187
MC1125X1562-250	1.125	1.562	0.250
MC1125X1625-250	1.125	1.625	0.250
MC1250X1500-125	1.250	1.500	0.125
MC1250X1625-250	1.250	1.625	0.250
MC1250X1687-187	1.250	1.687	0.187
MC1250X1750-250	1.250	1.750	0.250
MC1250X1875-250	1.250	1.875	0.250

Compound information available on pages 20-37.

Surface Finish: ISO 4287 & Chamfer Information on pages 7-9.
For ISO tolerance charts, refer to pages 12-13.

MFP SEALS
www.mfpseals.com

MC - Metal Clad Rod Wiper - Nitrile

A product of MFP Seals.

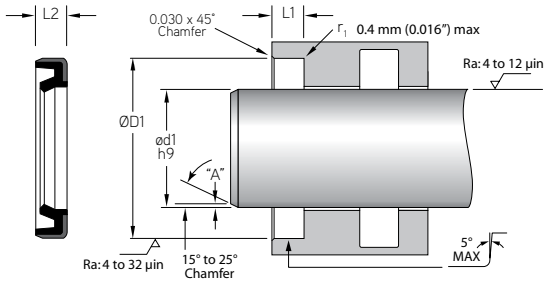

MFP PART NUMBER	ROD APPLICATION ød1	ØD1	L1
TOLERANCE	h9	+.001/-.001	+.015/-.000
MC1375X1750-187	1.375	1.750	0.187
MC1375X1875-250	1.375	1.875	0.250
MC1500X1875-187	1.500	1.875	0.187
MC1500X1875-250	1.500	1.875	0.250
MC1500X2000-250	1.500	2.000	0.250
MC1500X2000-312	1.500	2.000	0.312
MC1750X2125-187	1.750	2.125	0.187
MC1750X2250-250	1.750	2.250	0.250
MC1750X2250-312	1.750	2.250	0.312
MC1750X2375-250	1.750	2.375	0.250
MC2000X2375-187	2.000	2.375	0.187
MC2000X2500-250	2.000	2.500	0.250
MC2000X2500-312	2.000	2.500	0.312
MC2000X2625-250	2.000	2.625	0.250
MC2125X2500-187	2.125	2.500	0.187
MC2250X2875-250	2.250	2.875	0.250
MC2500X3000-250	2.500	3.000	0.250
MC2500X3125-250	2.500	3.125	0.250
MC2750X3250-250	2.750	3.250	0.250
MC3000X3500-250	3.000	3.500	0.250

Surface Finish: ISO 4287 & Chamfer Information on pages 7-9.
For ISO tolerance charts, refer to pages 12-13.

Compound information
available on pages 20-37.

MC - Metal Clad Rod Wiper - Urethane

A product of MFP Seals.

MFPSEALS®
www.mfpseals.com

MC METAL CLAD ROD WIPER

MFP Seals' MC Metal Clad Rod Wipers are designed to handle tough scraping problems such as mud, ice and weld spatter. The seal is constructed of a Urethane wiping/scraping element which is securely bonded to a heavy duty carbon steel case.

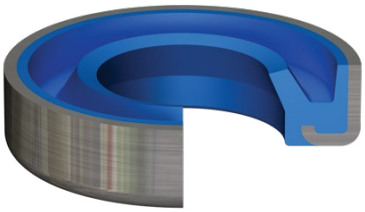

The standard compound for this seal is U2146, with a Carbon Steel case. It is also available in U2162.

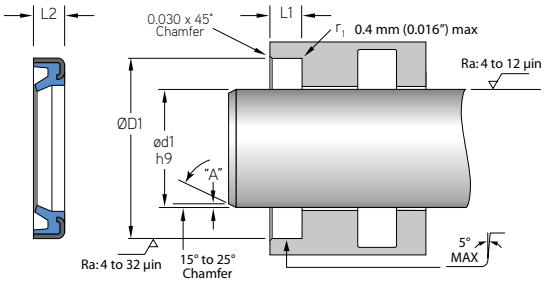

MFP PART NUMBER

MC0750X1250-312U2146

SEAL TYPE | ød1 | ØD1 | L1 | COMPOUND

Max. Velocity: 0.5 m/s (< 1.6 ft./s)

MFP PART NUMBER	ROD APPLICATION ød1	ØD1	L1
TOLERANCE	h9	+.001/-.001	+.015/-.000
MC0625X1125-312	0.625	1.125	0.312
MC0750X1250-312	0.750	1.250	0.312
MC0875X1375-312	0.875	1.375	0.312
MC1000X1500-312	1.000	1.500	0.312
MC1125X1625-312	1.125	1.625	0.312
MC1250X1750-250	1.250	1.750	0.250
MC1250X1750-312	1.250	1.750	0.312
MC1250X2062-375	1.250	2.062	0.375
MC1375X1625-125	1.375	1.625	0.125
MC1375X1875-312	1.375	1.875	0.312
MC1500X1875-187	1.500	1.875	0.187
MC1500X2000-250	1.500	2.000	0.250
MC1500X2000-312	1.500	2.000	0.312
MC1500X2125-312	1.500	2.125	0.312
MC1500X2250-375	1.500	2.250	0.375
MC1625X2125-312	1.625	2.125	0.312
MC1750X2250-250	1.750	2.250	0.250
MC1750X2250-312	1.750	2.250	0.312
MC1750X2437-375	1.750	2.437	0.375
MC1750X2500-375	1.750	2.500	0.375
MC1875X2375-312	1.875	2.375	0.312
MC1875X2562-375	1.875	2.562	0.375
MC2000X2375-250	2.000	2.375	0.250
MC2000X2500-250	2.000	2.500	0.250

Compound information available on pages 20-37.

Surface Finish: ISO 4287 & Chamfer Information on pages 7-9.
For ISO tolerance charts, refer to pages 12-13.

MFP SEALS
www.mfpseals.com

MC - Metal Clad Rod Wiper - Urethane

A product of MFP Seals.

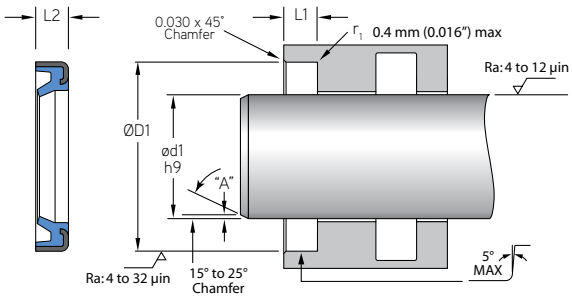

MFP PART NUMBER	ROD APPLICATION ød1	ØD1	L1
TOLERANCE	h9	+.001/-.001	+.015/-.000
MC2000X2500-312	2.000	2.500	0.312
MC2000X2625-250	2.000	2.625	0.250
MC2000X2686-375	2.000	2.686	0.375
MC2000X2750-375	2.000	2.750	0.375
MC2125X2875-375	2.125	2.875	0.375
MC2250X2750-250	2.250	2.750	0.250
MC2250X2750-312	2.250	2.750	0.312
MC2250X3000-250	2.250	3.000	0.250
MC2250X3000-375	2.250	3.000	0.375
MC2375X2875-312	2.375	2.875	0.312
MC2375X3125-375	2.375	3.125	0.375
MC2500X3000-187	2.500	3.000	0.187
MC2500X3000-312	2.500	3.000	0.312
MC2500X3000-375	2.500	3.000	0.375
MC2500X3250-250	2.500	3.250	0.250
MC2500X3250-375	2.500	3.250	0.375
MC2750X3500-375	2.750	3.500	0.375
MC3000X3500-312	3.000	3.500	0.312
MC3000X4000-500	3.000	4.000	0.500
MC3125X3625-187	3.125	3.625	0.187
MC3250X3750-312	3.250	3.750	0.312
MC3500X4000-312	3.500	4.000	0.312
MC3500X4125-312	3.500	4.125	0.312
MC4000X4625-312	4.000	4.625	0.312
MC4000X4750-312	4.000	4.750	0.312
MC4000X5000-500	4.000	5.000	0.500
MC4500X5125-312	4.500	5.125	0.312
MC4750X5375-312	4.500	5.375	0.312
MC5000X5625-312	5.000	5.625	0.312
MC5500X6125-375	5.500	6.125	0.375
MC5750X6375-375	5.750	6.375	0.375
MC7000X7750-312	7.000	7.750	0.312
MC8000X8750-375	8.000	8.750	0.375

Surface Finish: ISO 4287 & Chamfer Information on pages 7-9.
For ISO tolerance charts, refer to pages 12-13.

Compound information available on pages 20-37.

MFPSEALS®
www.mfpseals.com

DIP TUBES & SPARGERS

Custom Manufactured For Your Application

Molded from heavy-wall, Virgin PTFE tubing, MFP Seals designs and manufactures both Dip Tubes and Spargers (Aerators) for applications where metallic tubing may have an adverse reaction with other materials or liquids. MFP Seals T1000, Virgin PTFE material remains inert and will not contaminate other compounds or liquids that it comes in contact with. We design our PTFE Dip Tubes and Spargers with a threaded tube and flange, that when assembled is also back-welded to ensure rigidity.

Our T1000 Dip Tubes and Spargers can handle temperatures up to +500°F and are designed specifically for applications with no agitation. To ensure the reliability and performance of our Dip Tubes and Spargers, each is custom made for the given conditions.

Limited only by industry standard tube stock sizes, the design possibilities are endless, well almost. MFP Seals can make your design a reality, whether you are looking for straight, open end, flanged tubes, angled or curved tubes, or tubes that are perforated on one end for flow control purposes. Let us bring your Dip Tube or Sparger design to life.

Material Facts
T1000 (Virgin PTFE)

Properties	Method	Typical Value
PHYSICAL - MECHANICAL		
Density (g/cm³)	ASTM D792	2.14 - 2.18
Hardness Shore D (points)	ASTM D2240	51 - 60
Tensile Strength CD (MPa)	ISO 527	≥ 20
Elongation at Break CD (%)	ISO 527	>200
Compressive Strength at 1% deformation CD (psi)	ASTM D695	580 - 725
Deformation under load at room temp. after 24 hours at 13.7 N/mm² CD (%)	ASTM D621	14 - 17
Permanent deformation as above after 24 hours of rest at room temp. CD (%)	ASTM D621	7 - 8
Permanent deformation as above after 24 hours of rest at room temp. CD (%)	ASTM D621	7 - 8
Impact strength Izod (J/m)	ASTM D256	153
TRIBIOLOGICAL		
Dynamic Coefficient of Friction	ASTM D1894 ASTM D3702	0.06
Wear factor K	ASTM D3702	2.900
PV limit at 3 m/min		2.4
at 30 m/min	N/mm²· m/min	4.2
at 300 m/min		5.7
THERMAL		
Service Temperature (min to max)	°C	-200 to +260
	°F	-328 to +500
Thermal expansion coefficient (linear) 25 - 100°C (10-5in/in/°F)	ASTM D696	6.625 - 7.206
ELECTRICAL		
Dielectric Strength (specimen 0.5 mm thick) (KV/mm)	ASTM D149	≥ 40
Dielectric Constant at 60 Hz and 106 Hz	ASTM D150	2.05 - 2.10
Volume Resistivity (Ω · cm)	ASTM D257	1018
Surface Resistivity (Ω)	ASTM D257	1017

CD = Cross Direction

The data we are herewith providing are all based on laboratory testing and are proposed to technical designers as possible and useful advice. Deviations from the values indicated may occur, but they do not constitute themselves either detriment of quality or reason for rejection.

PROMOTIONAL MEDIA

MFPSEALS®
www.mfpseals.com

OHW Style Rod Wiper

A product of MFP Seals.

OHW STYLE ROD WIPER

OHW Style Rod Wipers are a two piece design, comprised of our T5100 filled PTFE seal and an O-Ring energizer. The OHW Style Rod Wiper is designed for use in light to medium duty hydraulic cylinders. They help prevent leakage in the primary rod seal by controlling excess fluid as the rod extends. Contamination is prevented from entering the cylinder by the outer sealing edge of the seal.

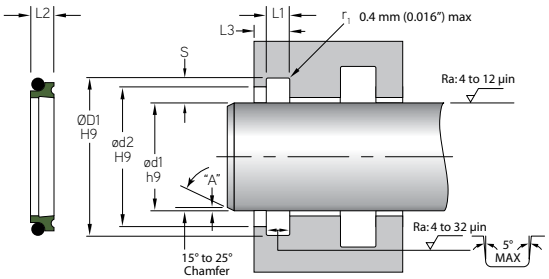

MFP PART NUMBER

OHW-0250X0T5100N

SEAL TYPE | ød1 | O-Ring DASH # | COMPOUND | ENERGIZER COMPOUND

Max. Velocity: 1.5 m/s (5 ft./s)

MFP PART NUMBER	ROD APPLICATION ød1	ØD1	L1	ød2	O-Ring Dash #
TOLERANCE	h9	H9	+0.008/-0.000	+0.003/-.000	
OHW-0250X0T5100N	0.250	0.440	0.146	0.310	011
OHW-0312X0T5100N	0.312	0.503	0.146	0.373	012
OHW-0375X0T5100N	0.375	0.565	0.146	0.435	013
TOLERANCE	h9	H9	+0.008/-0.000	+0.004/-.000	
OHW-0437X0T5100N	0.437	0.628	0.146	0.498	014
OHW-0500X0T5100N	0.500	0.690	0.146	0.560	015
OHW-0562X0T5100N	0.562	0.753	0.146	0.623	016
OHW-0625X0T5100N	0.625	0.815	0.146	0.685	017
OHW-0687X0T5100N	0.687	0.878	0.146	0.748	018
OHW-0750X0T5100N	0.750	0.940	0.146	0.810	019
OHW-0812X0T5100N	0.812	1.003	0.146	0.873	020
OHW-0875X0T5100N	0.875	1.065	0.146	0.935	021
OHW-0937X0T5100N	0.937	1.128	0.146	0.998	022
OHW-1000X0T5100N	1.000	1.190	0.146	1.060	023
OHW-0500X1T5100N	0.500	0.770	0.196	0.560	113
OHW-0562X1T5100N	0.562	0.833	0.196	0.623	114
OHW-0625X1T5100N	0.625	0.895	0.196	0.685	115
OHW-0687X1T5100N	0.687	0.958	0.196	0.748	116
OHW-0750X1T5100N	0.750	1.020	0.196	0.810	117
OHW-0812X1T5100N	0.812	1.083	0.196	0.873	118
OHW-0875X1T5100N	0.875	1.145	0.196	0.935	119
OHW-0937X1T5100N	0.937	1.208	0.196	0.998	120
OHW-1000X1T5100N	1.000	1.270	0.196	1.060	121
OHW-1062X1T5100N	1.062	1.333	0.196	1.123	122

Surface Finish: ISO 4287 & Chamfer Information on pages 7-9.
For ISO tolerance charts, refer to pages 12-13.

Compound information available on pages 20-37.

OHW Style Rod Wiper

A product of MFP Seals.

MFPSEALS®
www.mfpseals.com

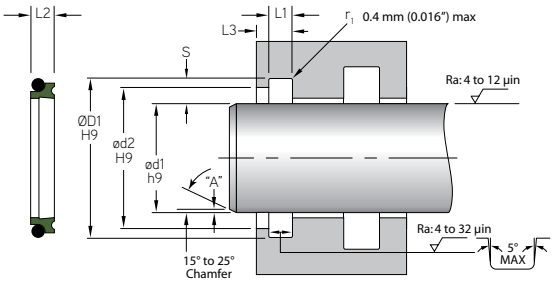

	ROD APPLICATION				
MFP PART NUMBER	ød1	ØD1	L1	ød2	O-Ring Dash #
TOLERANCE	h9	H9	+0.008/-0.000	+0.004/-.000	
OHW-1125X1T5100N	1.125	1.395	0.196	1.185	123
OHW-1187X1T5100N	1.187	1.458	0.196	1.248	124
OHW-1250X1T5100N	1.250	1.520	0.196	1.310	125
OHW-1312X1T5100N	1.312	1.583	0.196	1.373	126
OHW-1375X1T5100N	1.375	1.645	0.196	1.435	127
OHW-1437X1T5100N	1.437	1.708	0.196	1.498	128
OHW-1500X1T5100N	1.500	1.770	0.196	1.560	129
OHW-1562X1T5100N	1.562	1.833	0.196	1.623	130
OHW-1625X1T5100N	1.625	1.895	0.196	1.685	131
OHW-1687X1T5100N	1.687	1.958	0.196	1.748	132
OHW-1750X1T5100N	1.750	2.020	0.196	1.810	133
OHW-1812X1T5100N	1.812	2.083	0.196	1.873	134
OHW-1875X1T5100N	1.875	2.145	0.196	1.935	135
OHW-1937X1T5100N	1.937	2.208	0.196	1.998	136
TOLERANCE	h9	H9	+0.008/-0.000	+0.006/-.000	
OHW-2000X1T5100N	2.000	2.270	0.196	2.060	137
OHW-2062X1T5100N	2.062	2.333	0.196	2.123	138
OHW-2125X1T5100N	2.125	2.395	0.196	2.185	139
OHW-2187X1T5100N	2.187	2.458	0.196	2.248	140
OHW-2250X1T5100N	2.250	2.520	0.196	2.310	141
OHW-2375X1T5100N	2.375	2.645	0.196	2.435	143
OHW-2500X1T5100N	2.500	2.770	0.196	2.560	145
OHW-2625X1T5100N	2.625	2.895	0.196	2.685	147
OHW-2750X1T5100N	2.750	3.020	0.196	2.810	149
OHW-2875X1T5100N	2.875	3.145	0.196	2.935	151
OHW-3000X1T5100N	3.000	3.270	0.196	3.060	151
OHW-3125X1T5100N	3.125	3.395	0.196	3.185	152
OHW-3250X1T5100N	3.250	3.520	0.196	3.310	152
OHW-3375X1T5100N	3.375	3.645	0.196	3.435	153
OHW-3500X1T5100N	3.500	3.770	0.196	3.560	153
OHW-3625X1T5100N	3.625	3.985	0.196	3.685	154
OHW-3750X1T5100N	3.750	4.020	0.196	3.810	154
OHW-3875X1T5100N	3.875	4.145	0.196	3.935	155
OHW-4000X1T5100N	4.000	4.270	0.196	4.060	155
OHW-4125X1T5100N	4.125	4.395	0.196	4.185	156

Compound information available on pages 20-37.

Surface Finish: ISO 4287 & Chamfer Information on pages 7-9.
For ISO tolerance charts, refer to pages 12-13.

MFPSEALS®
www.mfpseals.com

OHW Style Rod Wiper

A product of MFP Seals.

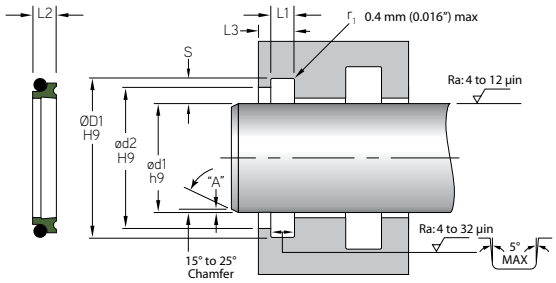

MFP PART NUMBER	ROD APPLICATION ød1	ØD1	L1	ød2	O-Ring Dash #
TOLERANCE	h9	H9	+0.008/-0.000	+0.006/-.000	
OHW-4250X1T5100N	4.250	4.520	0.196	4.310	156
OHW-4375X1T5100N	4.375	4.645	0.196	4.435	157
OHW-4500X1T5100N	4.500	4.770	0.196	4.560	157
OHW-4625X1T5100N	4.625	4.895	0.196	4.685	158
TOLERANCE	h9	H9	+0.008/-0.000	+0.008/-.000	
OHW-4750X1T5100N	4.750	5.020	0.196	4.810	158
OHW-4875X1T5100N	4.875	5.145	0.196	4.935	159
OHW-5000X1T5100N	5.000	5.270	0.196	5.060	159
OHW-5125X1T5100N	5.125	5.395	0.196	5.185	160
OHW-5250X1T5100N	5.250	5.520	0.196	5.310	160
OHW-5375X1T5100N	5.375	5.645	0.196	5.435	161
OHW-5500X1T5100N	5.500	5.770	0.196	5.560	161
OHW-5625X1T5100N	5.625	5.895	0.196	5.685	162
OHW-5750X1T5100N	5.750	6.020	0.196	5.810	162
OHW-6000X1T5100N	6.000	6.270	0.196	6.060	163
OHW-6000X2T5100N	6.000	6.344	0.236	6.060	258
OHW-6250X2T5100N	6.250	6.594	0.236	6.310	259
OHW-6500X2T5100N	6.500	6.844	0.236	6.560	260
OHW-6750X2T5100N	6.750	7.094	0.236	6.810	261
OHW-7000X2T5100N	7.000	7.344	0.236	7.060	262
TOLERANCE	h9	H9	+0.008/-0.000	+0.010/-.000	
OHW-7250X2T5100N	7.250	7.594	0.266	7.310	263
OHW-7500X2T5100N	7.500	7.844	0.236	7.560	264
OHW-7750X2T5100N	7.750	8.094	0.236	7.810	265
OHW-8000X2T5100N	8.000	8.344	0.236	8.060	266
OHW-8250X2T5100N	8.250	8.594	0.236	8.310	267
OHW-8500X2T5100N	8.500	8.844	0.236	8.560	268
OHW-8750X2T5100N	8.750	9.094	0.236	8.810	269
OHW-9000X2T5100N	9.000	9.344	0.236	9.060	270
OHW-9250X2T5100N	9.250	9.594	0.236	9.310	271
OHW-9500X2T5100N	9.500	9.844	0.236	9.560	272
OHW-9750X2T5100N	9.750	10.094	0.236	9.810	273
OHW-10000X2T5100N	10.000	10.344	0.236	10.060	274
OHW-10000X3T5100N	10.000	10.480	0.332	10.080	377
OHW-10500X3T5100N	10.500	10.980	0.332	10.580	378

Surface Finish: ISO 4287 & Chamfer Information on pages 7-9.
For ISO tolerance charts, refer to pages 12-13.

Compound information available on pages 20-37.

OHW Style Rod Wiper

A product of MFP Seals.

MFPSEALS®
www.mfpseals.com

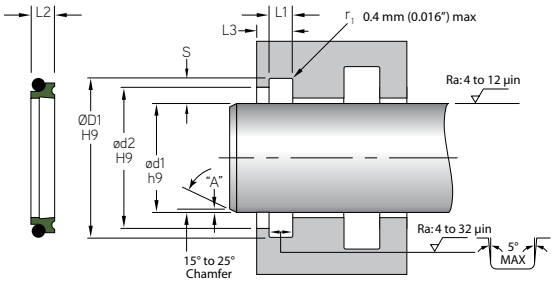

MFP PART NUMBER	ROD APPLICATION ød1	ØD1	L1	ød2	O-Ring Dash #
TOLERANCE	h9	H9	+0.008/-0.000	+0.010/-.000	
OHW-11000X3T5100N	11.000	11.480	0.332	11.080	379
OHW-11500X3T5100N	11.500	11.980	0.332	11.580	380
OHW-12000X3T5100N	12.000	12.480	0.332	12.080	381
TOLERANCE	h9	H9	+0.008/-0.000	+0.012/-.000	
OHW-12500X3T5100N	12.500	12.980	0.332	12.580	381
OHW-13000X3T5100N	13.000	13.480	0.332	13.080	382
OHW-13500X3T5100N	13.500	13.980	0.332	13.580	382
OHW-14000X3T5100N	14.000	14.480	0.332	14.080	383
OHW-14500X3T5100N	14.500	14.980	0.332	14.580	383
OHW-15000X3T5100N	15.000	15.480	0.332	15.080	384
OHW-15500X3T5100N	15.500	15.980	0.332	15.580	384
OHW-16000X3T5100N	16.000	16.480	0.332	16.080	385
OHW-16500X3T5100N	16.500	16.980	0.332	16.580	385
OHW-17000X3T5100N	17.000	17.480	0.332	17.080	386

Compound information available on pages 20-37.

Surface Finish: ISO 4287 & Chamfer Information on pages 7-9.
For ISO tolerance charts, refer to pages 12-13.

MFPSEALS®
www.mfpseals.com

ODW Style Rod Wiper

A product of MFP Seals.

ODW STYLE ROD WIPER

ODW Style Rod Wipers are a two piece design, comprised of our T5100 filled PTFE seal and an O-Ring energizer. The ODW Style Rod Wiper is designed for use in light to medium duty hydraulic cylinders. They help prevent leakage in the primary rod seal by controlling excess fluid as the rod extends. Contamination is prevented from entering the cylinder by the outer sealing edge of the seal.

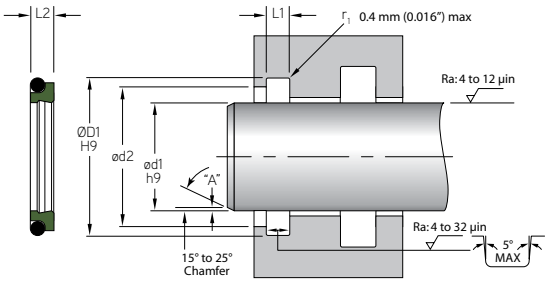

MFP PART NUMBER

ODW-0250X0T5100N

SEAL TYPE | ød1 | O-Ring DASH # | COMPOUND | ENERGIZER COMPOUND

Max. Velocity: 1.5 m/s (5 ft./s)

	ROD APPLICATION				
MFP PART NUMBER	ød1	ØD1	L1	ød2	O-Ring Dash #
TOLERANCE	h9	H9	+0.008/-0.000	+0.003/-.000	
ODW-0250X0T5100N	0.250	0.440	0.146	0.310	011
ODW-0312X0T5100N	0.312	0.503	0.146	0.373	012
ODW-0375X0T5100N	0.375	0.565	0.146	0.435	013
TOLERANCE	h9	H9	+0.008/-0.000	+0.004/-.000	
ODW-0437X0T5100N	0.437	0.628	0.146	0.498	014
ODW-0500X0T5100N	0.500	0.690	0.146	0.560	015
ODW-0562X0T5100N	0.562	0.753	0.146	0.623	016
ODW-0625X0T5100N	0.625	0.815	0.146	0.685	017
ODW-0687X0T5100N	0.687	0.878	0.146	0.748	018
ODW-0750X0T5100N	0.750	0.940	0.146	0.810	019
ODW-0812X0T5100N	0.812	1.003	0.146	0.873	020
ODW-0875X0T5100N	0.875	1.065	0.146	0.935	021
ODW-0937X0T5100N	0.937	1.128	0.146	0.998	022
ODW-1000X0T5100N	1.000	1.190	0.146	1.060	023
ODW-0500X1T5100N	0.500	0.770	0.196	0.560	113
ODW-0562X1T5100N	0.562	0.833	0.196	0.623	114
ODW-0625X1T5100N	0.625	0.895	0.196	0.685	115
ODW-0687X1T5100N	0.687	0.958	0.196	0.748	116
ODW-0750X1T5100N	0.750	1.020	0.196	0.810	117
ODW-0812X1T5100N	0.812	1.083	0.196	0.873	118
ODW-0875X1T5100N	0.875	1.145	0.196	0.935	119
ODW-0937X1T5100N	0.937	1.208	0.196	0.998	120
ODW-1000X1T5100N	1.000	1.270	0.196	1.060	121
ODW-1062X1T5100N	1.062	1.333	0.196	1.123	122

Surface Finish: ISO 4287 & Chamfer Information on pages 7-9.
For ISO tolerance charts, refer to pages 12-13.

Compound information available on pages 20-37.

ODW Style Rod Wiper

A product of MFP Seals.

MFPSEALS®
www.mfpseals.com

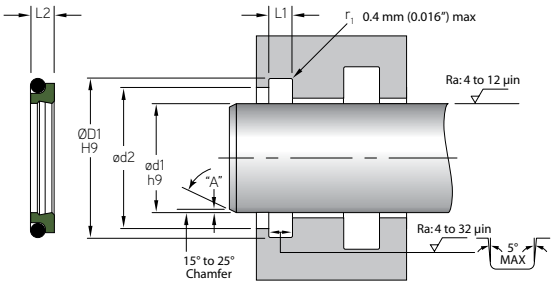

	ROD APPLICATION				
MFP PART NUMBER	ød1	ØD1	L1	ød2	O-Ring Dash #
TOLERANCE	h9	H9	+0.008/-0.000	+0.004/-.000	
ODW-1125X1T5100N	1.125	1.395	0.196	1.185	123
ODW-1187X1T5100N	1.187	1.458	0.196	1.248	124
ODW-1250X1T5100N	1.250	1.520	0.196	1.310	125
ODW-1312X1T5100N	1.312	1.583	0.196	1.373	126
ODW-1375X1T5100N	1.375	1.645	0.196	1.435	127
ODW-1437X1T5100N	1.437	1.708	0.196	1.498	128
ODW-1500X1T5100N	1.500	1.770	0.196	1.560	129
ODW-1562X1T5100N	1.562	1.833	0.196	1.623	130
ODW-1625X1T5100N	1.625	1.895	0.196	1.685	131
ODW-1687X1T5100N	1.687	1.958	0.196	1.748	132
ODW-1750X1T5100N	1.750	2.020	0.196	1.810	133
ODW-1812X1T5100N	1.812	2.083	0.196	1.873	134
ODW-1875X1T5100N	1.875	2.145	0.196	1.935	135
ODW-1937X1T5100N	1.937	2.208	0.196	1.998	136
TOLERANCE	h9	H9	+0.008/-0.000	+0.006/-.000	
ODW-2000X1T5100N	2.000	2.270	0.196	2.060	137
ODW-2062X1T5100N	2.062	2.333	0.196	2.123	138
ODW-2125X1T5100N	2.125	2.395	0.196	2.185	139
ODW-2187X1T5100N	2.187	2.458	0.196	2.248	140
ODW-2250X1T5100N	2.250	2.520	0.196	2.310	141
ODW-2375X1T5100N	2.375	2.645	0.196	2.435	143
ODW-2500X1T5100N	2.500	2.770	0.196	2.560	145
ODW-2625X1T5100N	2.625	2.895	0.196	2.685	147
ODW-2750X1T5100N	2.750	3.020	0.196	2.810	149
ODW-2875X1T5100N	2.875	3.145	0.196	2.935	151
ODW-3000X1T5100N	3.000	3.270	0.196	3.060	151
ODW-3125X1T5100N	3.125	3.395	0.196	3.185	152
ODW-3250X1T5100N	3.250	3.520	0.196	3.310	152
ODW-3375X1T5100N	3.375	3.645	0.196	3.435	153
ODW-3500X1T5100N	3.500	3.770	0.196	3.560	153
ODW-3625X1T5100N	3.625	3.985	0.196	3.685	154
ODW-3750X1T5100N	3.750	4.020	0.196	3.810	154
ODW-3875X1T5100N	3.875	4.145	0.196	3.935	155
ODW-4000X1T5100N	4.000	4.270	0.196	4.060	155
ODW-4125X1T5100N	4.125	4.395	0.196	4.185	156

Compound information available on pages 20-37.

Surface Finish: ISO 4287 & Chamfer Information on pages 7-9.
For ISO tolerance charts, refer to pages 12-13.

MFPSEALS®
www.mfpseals.com

ODW Style Rod Wiper

A product of MFP Seals.

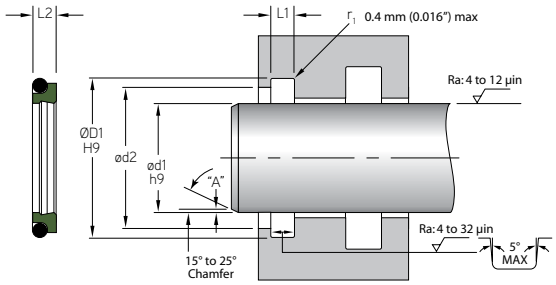

MFP PART NUMBER	ROD APPLICATION ød1	ØD1	L1	ød2	O-Ring Dash #
TOLERANCE	h9	H9	+0.008/-0.000	+0.006/-.000	
ODW-4250X1T5100N	4.250	4.520	0.196	4.310	156
ODW-4375X1T5100N	4.375	4.645	0.196	4.435	157
ODW-4500X1T5100N	4.500	4.770	0.196	4.560	157
ODW-4625X1T5100N	4.625	4.895	0.196	4.685	158
TOLERANCE	h9	H9	+0.008/-0.000	+0.008/-.000	
ODW-4750X1T5100N	4.750	5.020	0.196	4.810	158
ODW-4875X1T5100N	4.875	5.145	0.196	4.935	159
ODW-5000X1T5100N	5.000	5.270	0.196	5.060	159
ODW-5125X1T5100N	5.125	5.395	0.196	5.185	160
ODW-5250X1T5100N	5.250	5.520	0.196	5.310	160
ODW-5375X1T5100N	5.375	5.645	0.196	5.435	161
ODW-5500X1T5100N	5.500	5.770	0.196	5.560	161
ODW-5625X1T5100N	5.625	5.895	0.196	5.685	162
ODW-5750X1T5100N	5.750	6.020	0.196	5.810	162
ODW-6000X1T5100N	6.000	6.270	0.196	6.060	163
ODW-6000X2T5100N	6.000	6.344	0.236	6.060	258
ODW-6250X2T5100N	6.250	6.594	0.236	6.310	259
ODW-6500X2T5100N	6.500	6.844	0.236	6.560	260
ODW-6750X2T5100N	6.750	7.094	0.236	6.810	261
ODW-7000X2T5100N	7.000	7.344	0.236	7.060	262
TOLERANCE	h9	H9	+0.008/-0.000	+0.010/-.000	
ODW-7250X2T5100N	7.250	7.594	0.266	7.310	263
ODW-7500X2T5100N	7.500	7.844	0.236	7.560	264
ODW-7750X2T5100N	7.750	8.094	0.236	7.810	265
ODW-8000X2T5100N	8.000	8.344	0.236	8.060	266
ODW-8250X2T5100N	8.250	8.594	0.236	8.310	267
ODW-8500X2T5100N	8.500	8.844	0.236	8.560	268
ODW-8750X2T5100N	8.750	9.094	0.236	8.810	269
ODW-9000X2T5100N	9.000	9.344	0.236	9.060	270
ODW-9250X2T5100N	9.250	9.594	0.236	9.310	271
ODW-9500X2T5100N	9.500	9.844	0.236	9.560	272
ODW-9750X2T5100N	9.750	10.094	0.236	9.810	273
ODW-10000X2T5100N	10.000	10.344	0.236	10.060	274
ODW-10000X3T5100N	10.000	10.480	0.332	10.080	377
ODW-10500X3T5100N	10.500	10.980	0.332	10.580	378

Surface Finish: ISO 4287 & Chamfer Information on pages 7-9.
For ISO tolerance charts, refer to pages 12-13.

Compound information available on pages 20-37.

ODW Style Rod Wiper

A product of MFP Seals.

MFPSEALS®
www.mfpseals.com

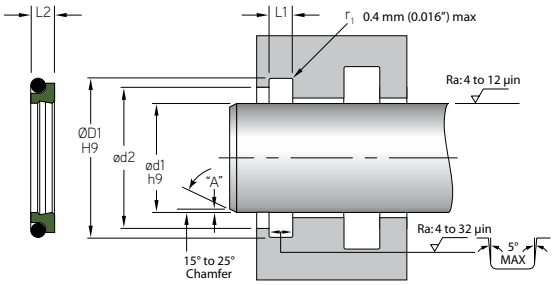

MFP PART NUMBER	ROD APPLICATION ød1	ØD1	L1	ød2	O-Ring Dash #
TOLERANCE	h9	H9	+0.008/-0.000	+0.010/-.000	
ODW-11000X3T5100N	11.000	11.480	0.332	11.080	379
ODW-11500X3T5100N	11.500	11.980	0.332	11.580	380
ODW-12000X3T5100N	12.000	12.480	0.332	12.080	381
TOLERANCE	h9	H9	+0.008/-0.000	+0.012/-.000	
ODW-12500X3T5100N	12.500	12.980	0.332	12.580	381
ODW-13000X3T5100N	13.000	13.480	0.332	13.080	382
ODW-13500X3T5100N	13.500	13.980	0.332	13.580	382
ODW-14000X3T5100N	14.000	14.480	0.332	14.080	383
ODW-14500X3T5100N	14.500	14.980	0.332	14.580	383
ODW-15000X3T5100N	15.000	15.480	0.332	15.080	384
ODW-15500X3T5100N	15.500	15.980	0.332	15.580	384
ODW-16000X3T5100N	16.000	16.480	0.332	16.080	385
ODW-16500X3T5100N	16.500	16.980	0.332	16.580	385
ODW-17000X3T5100N	17.000	17.480	0.332	17.080	386

Compound information available on pages 20-37.

Surface Finish: ISO 4287 & Chamfer Information on pages 7-9.
For ISO tolerance charts, refer to pages 12-13.

MFPSEALS
www.mfpseals.com

A-Series, Style-1, 2 & 3 (MS28776) Rod Scrapers

Medium Duty

HYDROWYPE

A-SERIES, STYLE-1, 2 & 3 (MS28776) MIL-SPEC SCRAPERS

A-Series, Style-1 scrapers are the original **MS28776** metal scraper Mil-Spec. These are still available for purchase, for repair maintenance, and for retrofit installations. But wherever possible, it is highly recommended that this style be substituted with a Style-2 or Style-3, which through the inclusion of a metal spring, that serves as a tensioning member, are capable of meeting the full **MS28776-M2** requirements for light-tightness, rod pressure and breakout friction.

A-Series, Style-2 & 3 Rod Scraper dimensions are according to the **MS28776** specification set forth under **MIL-R-5049**. Style-2 provides a scraping body with a narrow groove accommodating a 302 stainless steel serpentine form spring to generate scraping load. Style-3 provides a scraping body with a wide groove in the outside diameter containing two 1095 high carbon steel (plated) c-springs (resembling split washers) to generate scraping load. Both of these spring types are installed in a groove on OD of the scraper body (springs do not contact the rod).

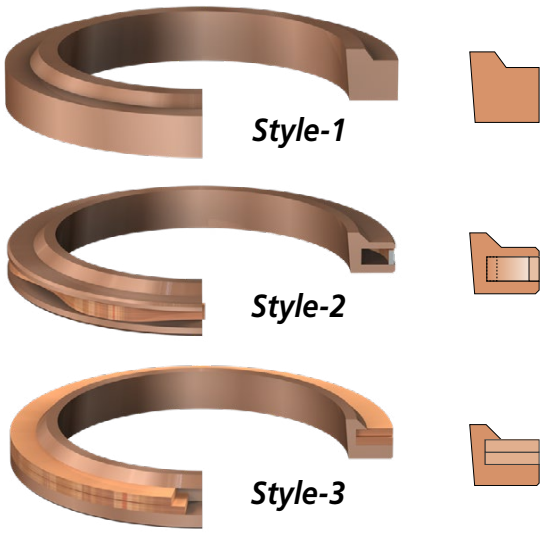

Available materials based on style.
Contact MFP Seals for detailed information.

The following certification levels are offered:

1. Manufacturer Certificate of Conformance (CoC).
2. Material and Process certificates plus CoC.
3. Full conformance report (MIL-STD-831 format) plus material, process and manufacturers certs.

Please identify certification requirements that time of requesting a quote and placing order.

HYDROWYPE PART NUMBER

A-01-2C

SEAL TYPE — DASH# — STYLE — FINISH

FINISH DESIGNATION

B = UNFINISHED*	N = NICKEL
C = CADMIUM (Standard)	Z = ZINC

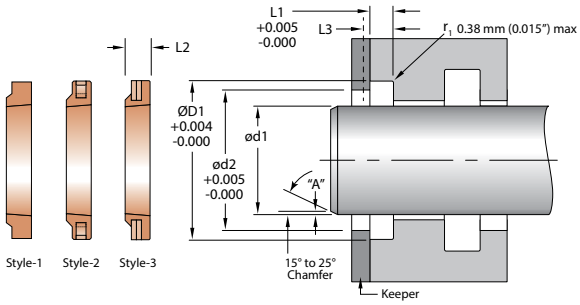

*Unfinished parts are susceptible to oxidation and should not be stored for long periods without appropriate treatment. Parts will be shipped in plastic bags with light coating of machine oil to prevent corrosion.

Scrapers are typically held in place by a Keeper/Follower plate or Retaining Ring.
Groove dimensions in accordance with MS33675.
Rod diameter in conformance with MIL-G-5514 Rev. G.

		ROD APPLICATION				
PART NUMBER	STYLE	ød1	ØD1	ød2	L1	L3
.104" - GROOVE		NOMINAL	+0.004/-0.000	+0.005/-0.000	+0.005/-0.000	+0.005/-0.000
A-01	1 & 3	0.500	0.760	0.647	0.104	0.136
A-02	1 & 3	0.563	0.823	0.710	0.104	0.136
A-03	1 & 3	0.625	0.885	0.772	0.104	0.136
A-04	1 & 3	0.688	0.948	0.834	0.104	0.136
A-05	1 & 3	0.750	1.010	0.897	0.104	0.136
A-06	1 & 3	0.813	1.052	0.949	0.104	0.136
A-07	1 & 3	0.875	1.114	1.012	0.104	0.136
A-08	1 & 3	0.938	1.177	1.074	0.104	0.136
A-09	1 & 3	1.000	1.239	1.136	0.104	0.136
A-10	1 & 3	1.063	1.302	1.199	0.104	0.136
A-11	1 & 3	1.125	1.364	1.262	0.104	0.136
A-12	1 & 3	1.188	1.427	1.324	0.104	0.136

Surface Finish: ISO 4287 & Chamfer Information on pages 7-9.
For ISO tolerance charts, refer to pages 12-13.

Compound information available on pages 20-37.

A-Series, Style-1, 2 & 3 (MS28776) Rod Scrapers

Medium Duty

MFPSEALS®
www.mfpseals.com

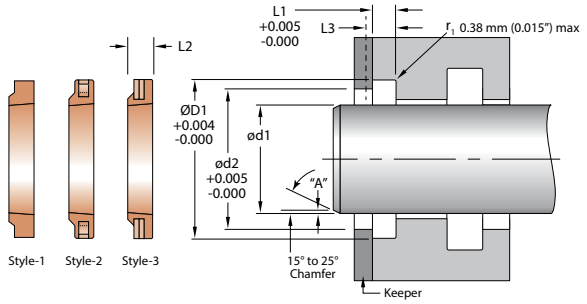

PART NUMBER	STYLE	ød1	ØD1	ød2	L1	L3
		ROD APPLICATION - MS33675				
.104" - GROOVE		NOMINAL	+0.004/-0.000	+0.005/-0.000	+0.005/-0.000	+0.005/-0.000
A-13	1 & 3	1.250	1.489	1.386	0.104	0.136
A-14	1 & 3	1.313	1.614	1.480	0.104	0.136
A-15	1 & 3	1.375	1.677	1.542	0.104	0.135
A-16	1 & 2	1.438	1.739	1.605	0.104	0.135
A-17	1 & 2	1.500	1.802	1.668	0.104	0.135
A-18	1 & 2	1.625	1.927	1.793	0.104	0.135
A-19	1 & 2	1.750	2.052	1.918	0.104	0.135
A-20	1 & 2	1.875	2.177	2.043	0.104	0.135
A-21	1 & 2	2.000	2.302	2.178	0.104	0.135
A-22	1 & 2	2.125	2.427	2.303	0.104	0.135
A-23	1 & 2	2.250	2.552	2.428	0.104	0.135
A-24	1 & 2	2.375	2.677	2.553	0.104	0.135
A-25	1 & 2	2.500	2.802	2.678	0.104	0.135
.119" - GROOVE		NOMINAL	+0.004/-0.000	+0.005/-0.000	+0.005/-0.000	+0.005/-0.000
A-26	1 & 2	2.625	2.989	2.834	0.119	0.150
A-27	1 & 2	2.750	3.114	2.959	0.119	0.150
A-28	1 & 2	2.875	3.239	3.084	0.119	0.150
A-29	1 & 2	3.000	3.364	3.209	0.119	0.150
A-30	1 & 2	3.125	3.489	3.334	0.119	0.150
A-31	1 & 2	3.250	3.614	3.459	0.119	0.150
A-32	1 & 2	3.375	3.739	3.584	0.119	0.150
A-33	1 & 2	3.500	3.864	3.709	0.119	0.150
A-34	1 & 2	3.625	3.989	3.834	0.119	0.150
A-35	1 & 2	3.750	4.114	3.959	0.119	0.150
A-36	1 & 2	3.875	4.239	4.084	0.119	0.150
.135" - GROOVE		NOMINAL	+0.004/-0.000	+0.005/-0.000	+0.005/-0.000	+0.005/-0.000
A-37	1 & 2	4.000	4.427	4.240	0.135	0.166
A-38	1 & 2	4.125	4.552	4.365	0.135	0.166
A-39	1 & 2	4.250	4.677	4.490	0.135	0.166
A-40	1 & 2	4.375	4.802	4.615	0.135	0.166
A-41	1 & 2	4.500	4.927	4.740	0.135	0.166
A-42	1 & 2	4.625	5.052	4.865	0.135	0.166
A-43	1 & 2	4.750	5.177	4.990	0.135	0.166
A-44	1 & 2	4.875	5.302	5.115	0.135	0.166
A-45	1 & 2	5.000	5.427	5.240	0.135	0.166
A-46	1 & 2	5.125	5.552	5.365	0.135	0.166

Compound information available on pages 20-37.

Surface Finish: ISO 4287 & Chamfer Information on pages 7-9.
For ISO tolerance charts, refer to pages 12-13.

MFPSEALS®
www.mfpseals.com

A-Series, Style-1, 2 & 3 (MS28776) Rod Scrapers

Medium Duty

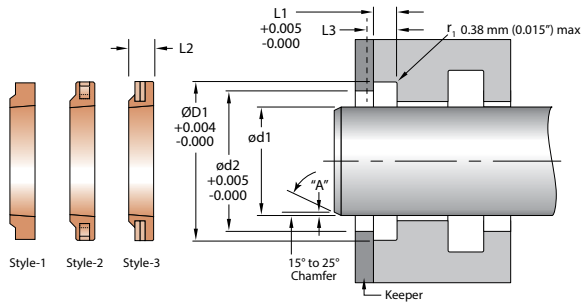

PART NUMBER	STYLE	ROD APPLICATION - MS33675 ød1	ØD1	ød2	L1	L3
.135" - GROOVE		NOMINAL	+0.004/-0.000	+0.005/-0.000	+0.005/-0.000	+0.005/-0.000
A-47	1 & 2	5.250	5.677	5.490	0.135	0.166
A-48	1 & 2	5.375	5.802	5.615	0.135	0.166
A-49	1 & 2	5.500	5.927	5.740	0.135	0.166
.151" - GROOVE		NOMINAL	+0.004/-0.000	+0.005/-0.000	+0.005/-0.000	+0.005/-0.000
A-50	1 & 2	5.625	6.114	5.896	0.151	0.182
A-51	1 & 2	5.750	6.239	6.022	0.151	0.182
A-52	1 & 2	5.875	6.364	6.146	0.151	0.182
A-53	1 & 2	6.000	6.489	6.272	0.151	0.182
A-54	1 & 2	6.250	6.739	6.522	0.151	0.182
A-55	1 & 2	6.500	6.989	6.772	0.151	0.182
A-56	1 & 2	6.750	7.239	7.022	0.151	0.182
A-57	1 & 2	7.000	7.489	7.272	0.151	0.182
A-58	1 & 2	7.250	7.739	7.522	0.151	0.182
A-59	1 & 2	7.500	7.989	7.772	0.151	0.182
A-60	1 & 2	7.750	8.239	8.022	0.151	0.182
A-61	1 & 2	8.000	8.489	8.272	0.151	0.182
A-62	1 & 2	8.500	8.989	8.772	0.151	0.182
A-63	1 & 2	9.000	9.489	9.272	0.151	0.182
A-64	1 & 2	9.500	9.989	9.772	0.151	0.182
A-65	1 & 2	10.000	10.489	10.272	0.151	0.182
A-66	1 & 2	10.500	10.989	10.772	0.151	0.182
A-67	1 & 2	11.000	11.489	11.272	0.151	0.182
.166" - GROOVE		NOMINAL	+0.004/-0.000	+0.005/-0.000	+0.005/-0.000	+0.005/-0.000
A-68	1 & 2	11.500	11.989	11.772	0.166	0.197
A-69	1 & 2	12.000	12.489	12.272	0.166	0.197
A-70	1 & 2	12.500	12.989	12.772	0.166	0.197
A-71	1 & 2	13.000	13.489	13.272	0.166	0.197

Surface Finish: ISO 4287 & Chamfer Information on pages 7-9.
For ISO tolerance charts, refer to pages 12-13.

Compound information available on pages 20-37.

A-Series, AE Rod Scraper (SS303) - Style-1, 2 & 3

Medium Duty

MFP SEALS
www.mfpseals.com

HYDROWYPE

A-SERIES, AE STYLE-1, 2 & 3 303 STAINLESS STEEL SCRAPERS

AE Style-1 scrapers are machined from 303 Stainless Steel. These scrapers are available for purchase, for repair maintenance. But wherever possible, it is highly recommended that this style be substituted with a Style-2 or Style-3, which through the inclusion of a metal spring that serves as a tensioning member, provide better performance in the areas of light-tightness, rod pressure and breakout friction.

AE Style-2 & 3 Rod Scraper dimensions are according to the **MS28776** specification. Style-2 provides a scraping body with a narrow groove accommodating a 302 stainless steel serpentine form spring to generate scraping load. Style-3 provides a scraping body with a wide groove in the outside diameter containing two 1095 high carbon steel (plated) c-springs (resembling split washers) to generate scraping load. Both of these spring types are installed in a groove on OD of the scraper body (springs do not contact the rod).

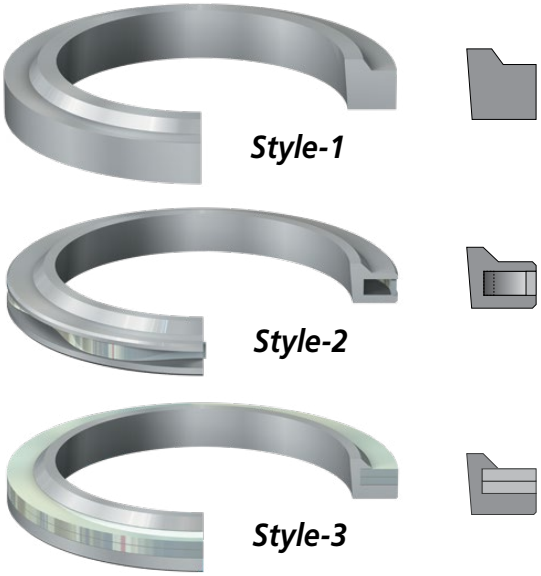

Available materials based on style. Contact MFP Seals for detailed information.

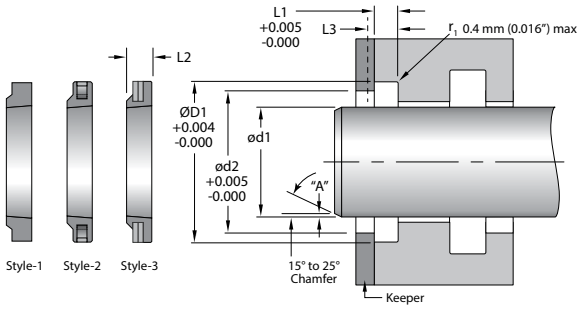

Scrapers are typically held in place by a Keeper/Follower plate or Retaining Ring.

Max. Velocity: 0.5 m/s (1.64 ft./s)**

HYDROWYPE PART NUMBER

AE-01-2B

SEAL TYPE — DASH# — STYLE — FINISH

FINISH DESIGNATION

B = UNFINISHED (Standard) T =TiCN

**Based on tests conducted with very specific "dry rod" conditions, intended to represent a worst-case scenario.

ROD SCRAPERS

		ROD APPLICATION				
PART NUMBER	STYLE	ød1	ØD1	ød2	L1	L3
.105" - GROOVE		NOMINAL	+0.004/-0.000	+0.005/-0.000	+0.005/-0.000	+0.005/-0.000
AE-01	3	0.500	0.760	0.647	0.105	0.136
AE-02	3	0.563	0.823	0.710	0.105	0.136
AE-03	3	0.625	0.885	0.772	0.105	0.136
AE-04	3	0.688	0.948	0.834	0.105	0.136
AE-05	3	0.750	1.010	0.897	0.105	0.136
AE-06	3	0.813	1.052	0.949	0.105	0.136
AE-07	3	0.875	1.114	1.012	0.105	0.136
AE-08	3	0.938	1.177	1.074	0.105	0.136
AE-09	3	1.000	1.239	1.136	0.105	0.136
AE-10	3	1.063	1.302	1.199	0.105	0.136
AE-11	3	1.125	1.364	1.262	0.105	0.136
AE-12	3	1.188	1.427	1.324	0.105	0.136
AE-13	3	1.250	1.489	1.386	0.105	0.136

Compound information available on pages 20-37.

Surface Finish: ISO 4287 & Chamfer Information on pages 7-9.
For ISO tolerance charts, refer to pages 12-13.

MFPSEALS®
www.mfpseals.com

A-Series, AE Rod Scraper (SS303) - Style-1, 2 & 3

Medium Duty

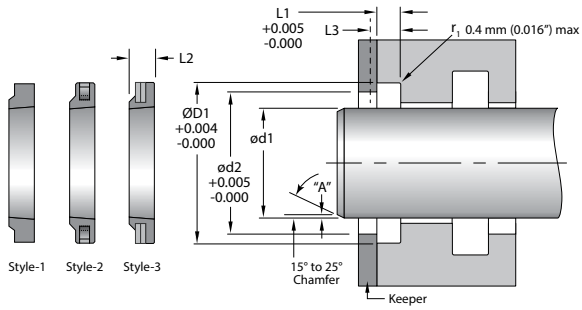

		ROD APPLICATION				
PART NUMBER	STYLE	ød1	ØD1	ød2	L1	L3
.105" - GROOVE		NOMINAL	+0.004/-0.000	+0.005/-0.000	+0.005/-0.000	+0.005/-0.000
AE-14	3	1.313	1.614	1.480	0.105	0.136
AE-15	3	1.375	1.677	1.542	0.105	0.135
AE-16	2	1.438	1.739	1.605	0.105	0.135
AE-17	2	1.500	1.802	1.668	0.105	0.135
AE-18	2	1.625	1.927	1.793	0.105	0.135
AE-19	2	1.750	2.052	1.918	0.105	0.135
AE-20	2	1.875	2.177	2.043	0.105	0.135
AE-21	2	2.000	2.302	2.178	0.105	0.135
AE-22	2	2.125	2.427	2.303	0.105	0.135
AE-23	2	2.250	2.552	2.428	0.105	0.135
AE-24	2	2.375	2.677	2.553	0.105	0.135
AE-25	2	2.500	2.802	2.678	0.105	0.135
.119" - GROOVE		NOMINAL	+0.004/-0.000	+0.005/-0.000	+0.005/-0.000	+0.005/-0.000
AE-26	2	2.625	2.989	2.834	0.119	0.150
AE-27	2	2.750	3.114	2.959	0.119	0.150
AE-28	2	2.875	3.239	3.084	0.119	0.150
AE-29	2	3.000	3.364	3.209	0.119	0.150
AE-30	2	3.125	3.489	3.334	0.119	0.150
AE-31	2	3.250	3.614	3.459	0.119	0.150
AE-32	2	3.375	3.739	3.584	0.119	0.150
AE-33	2	3.500	3.864	3.709	0.119	0.150
AE-34	2	3.625	3.989	3.834	0.119	0.150
AE-35	2	3.750	4.114	3.959	0.119	0.150
AE-36	2	3.875	4.239	4.084	0.119	0.150
.135" - GROOVE		NOMINAL	+0.004/-0.000	+0.005/-0.000	+0.005/-0.000	+0.005/-0.000
AE-37	2	4.000	4.427	4.240	0.135	0.166
AE-38	2	4.125	4.552	4.365	0.135	0.166
AE-39	2	4.250	4.677	4.490	0.135	0.166
AE-40	2	4.375	4.802	4.615	0.135	0.166
AE-41	2	4.500	4.927	4.740	0.135	0.166
AE-42	2	4.625	5.052	4.865	0.135	0.166
AE-43	2	4.750	5.177	4.990	0.135	0.166
AE-44	2	4.875	5.302	5.115	0.135	0.166
AE-45	2	5.000	5.427	5.240	0.135	0.166
AE-46	2	5.125	5.552	5.365	0.135	0.166
AE-47	2	5.250	5.677	5.490	0.135	0.166

Surface Finish: ISO 4287 & Chamfer Information on pages 7-9.
For ISO tolerance charts, refer to pages 12-13.

Compound information
available on pages 20-37.

A-Series, AE Rod Scraper (SS303) - Style-1, 2 & 3

Medium Duty

MFPSEALS®
www.mfpseals.com

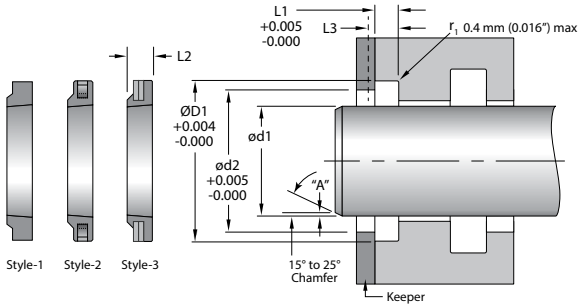

PART NUMBER	STYLE	ROD APPLICATION ød1	ØD1	ød2	L1	L3
.135" - GROOVE		NOMINAL	+0.004/-0.000	+0.005/-0.000	+0.005/-0.000	+0.005/-0.000
AE-48	2	5.375	5.802	5.615	0.135	0.166
AE-49	2	5.500	5.927	5.740	0.135	0.166
.151" - GROOVE		NOMINAL	+0.004/-0.000	+0.005/-0.000	+0.005/-0.000	+0.005/-0.000
AE-50	2	5.625	6.114	5.896	0.151	0.182
AE-51	2	5.750	6.239	6.022	0.151	0.182
AE-52	2	5.875	6.364	6.146	0.151	0.182
AE-53	2	6.000	6.489	6.272	0.151	0.182
AE-54	2	6.250	6.739	6.522	0.151	0.182
AE-55	2	6.500	6.989	6.772	0.151	0.182
AE-56	2	6.750	7.239	7.022	0.151	0.182
AE-57	2	7.000	7.489	7.272	0.151	0.182
AE-58	2	7.250	7.739	7.522	0.151	0.182
AE-59	2	7.500	7.989	7.772	0.151	0.182
AE-60	2	7.750	8.239	8.022	0.151	0.182
AE-61	2	8.000	8.489	8.272	0.151	0.182

Compound information
available on pages 20-37.

Surface Finish: ISO 4287 & Chamfer Information on pages 7-9.
For ISO tolerance charts, refer to pages 12-13.

MFPSEALS
www.mfpseals.com

A-Series, AC Rod Scraper - Style-2

Medium Duty

HYDROWYPE

A-SERIES, AC STYLE-2 ROD SCRAPER

Field-retrofit scrapers. Fully broken, 2-piece scraper bodies, with serpentine retainer spring.

Style-2 provides a scraping body with a narrow groove accommodating a 302 stainless steel serpentine form spring to generate scraping load. The spring is installed in a groove on OD of the scraper body (springs do not contact the rod).

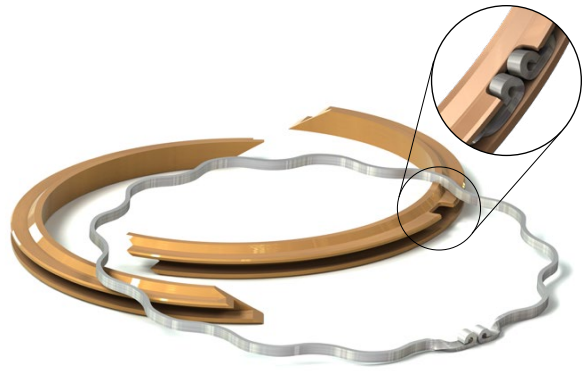

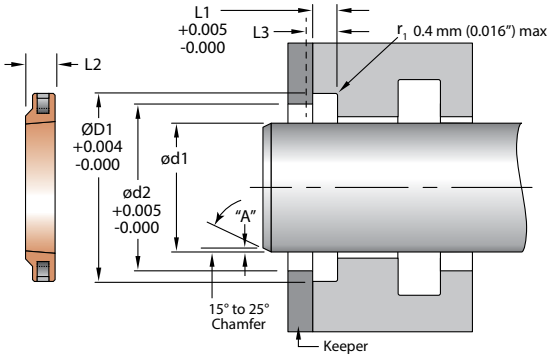

Scrapers are typically held in place by a Keeper/Follower plate or Retaining Ring.

HYDROWYPE PART NUMBER

AC-01-2C

SEAL TYPE | DASH# | STYLE | FINISH

FINISH DESIGNATION

B = UNFINISHED*
C = CADMIUM (Standard)
N = NICKEL
Z = ZINC

*Unfinished parts are susceptible to oxidation and should not be stored for long periods without appropriate treatment. Parts will be shipped in plastic bags with light coating of machine oil to prevent corrosion.

	ROD APPLICATION				
PART NUMBER	ød1	ØD1	ød2	L1	L3
.105" - GROOVE	NOMINAL	+0.004/-0.000	+0.005/-0.000	+0.005/-0.000	+0.005/-0.000
AC-16	1.438	1.739	1.605	0.104	0.135
AC-17	1.500	1.802	1.668	0.104	0.135
AC-18	1.625	1.927	1.793	0.104	0.135
AC-19	1.750	2.052	1.918	0.104	0.135
AC-20	1.875	2.177	2.043	0.104	0.135
AC-21	2.000	2.302	2.178	0.104	0.135
AC-22	2.125	2.427	2.303	0.104	0.135
AC-23	2.250	2.552	2.428	0.104	0.135
AC-24	2.375	2.677	2.553	0.104	0.135
AC-25	2.500	2.802	2.678	0.104	0.135
.119" - GROOVE	NOMINAL	+0.004/-0.000	+0.005/-0.000	+0.005/-0.000	+0.005/-0.000
AC-26	2.625	2.989	2.834	0.119	0.150
AC-27	2.750	3.114	2.959	0.119	0.150
AC-28	2.875	3.239	3.084	0.119	0.150
AC-29	3.000	3.364	3.209	0.119	0.150
AC-30	3.125	3.489	3.334	0.119	0.150
AC-31	3.250	3.614	3.459	0.119	0.150
AC-32	3.375	3.739	3.584	0.119	0.150
AC-33	3.500	3.864	3.709	0.119	0.150
AC-34	3.625	3.989	3.834	0.119	0.150
AC-35	3.750	4.114	3.959	0.119	0.150
AC-36	3.875	4.239	4.084	0.119	0.150

Surface Finish: ISO 4287 & Chamfer Information on pages 7-9.
For ISO tolerance charts, refer to pages 12-13.

Compound information available on pages 20-37.

A-Series, AC Rod Scraper - Style-2

Medium Duty

MFPSEALS®
www.mfpseals.com

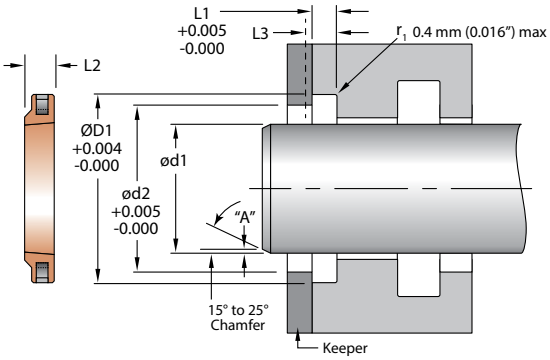

PART NUMBER	ROD APPLICATION				
	ød1	ØD1	ød2	L1	L3
.104" - GROOVE	NOMINAL	+0.004/-0.000	+0.005/-0.000	+0.005/-0.000	+0.005/-0.000
AC-37	4.000	4.427	4.240	0.135	0.166
AC-38	4.125	4.552	4.365	0.135	0.166
AC-39	4.250	4.677	4.490	0.135	0.166
AC-40	4.375	4.802	4.615	0.135	0.166
AC-41	4.500	4.927	4.740	0.135	0.166
AC-42	4.625	5.052	4.865	0.135	0.166
AC-43	4.750	5.177	4.990	0.135	0.166
AC-44	4.875	5.302	5.115	0.135	0.166
AC-45	5.000	5.427	5.240	0.135	0.166
AC-46	5.125	5.552	5.365	0.135	0.166
AC-47	5.250	5.677	5.490	0.135	0.166
AC-48	5.375	5.802	5.615	0.135	0.166
AC-49	5.500	5.927	5.740	0.135	0.166
.151" - GROOVE	NOMINAL	+0.004/-0.000	+0.005/-0.000	+0.005/-0.000	+0.005/-0.000
AC-50	5.625	6.114	5.896	0.151	0.182
AC-51	5.750	6.239	6.022	0.151	0.182
AC-52	5.875	6.364	6.146	0.151	0.182
AC-53	6.000	6.489	6.272	0.151	0.182
AC-54	6.250	6.739	6.522	0.151	0.182
AC-55	6.500	6.989	6.772	0.151	0.182
AC-56	6.750	7.239	7.022	0.151	0.182
AC-57	7.000	7.489	7.272	0.151	0.182
AC-58	7.250	7.739	7.522	0.151	0.182
AC-59	7.500	7.989	7.772	0.151	0.182
AC-60	7.750	8.239	8.022	0.151	0.182
AC-61	8.000	8.489	8.272	0.151	0.182
AC-62	8.500	8.989	8.772	0.151	0.182
AC-63	9.000	9.489	9.272	0.151	0.182
AC-64	9.500	9.989	9.772	0.151	0.182
AC-65	10.000	10.489	10.272	0.151	0.182
AC-66	10.500	10.989	10.772	0.151	0.182
AC-67	11.000	11.489	11.272	0.151	0.182

Compound information available on pages 20-37.

Surface Finish: ISO 4287 & Chamfer Information on pages 7-9.
For ISO tolerance charts, refer to pages 12-13.

MFPSEALS®
www.mfpseals.com

A-Series, AC Rod Scraper - Style-2

Medium Duty

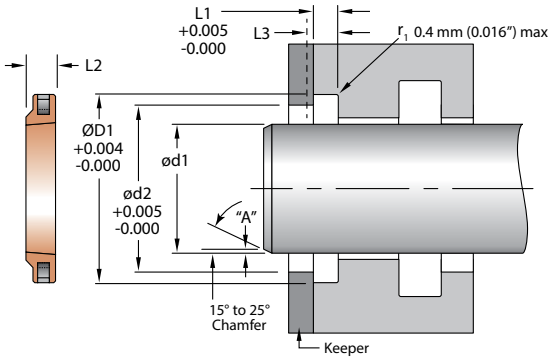

PART NUMBER	ROD APPLICATION				
	ød1	ØD1	ød2	L1	L3
.166" - GROOVE	NOMINAL	+0.004/-0.000	+0.005/-0.000	+0.005/-0.000	+0.005/-0.000
AC-68	11.500	11.989	11.772	0.166	0.197
AC-69	12.000	12.489	12.272	0.166	0.197
AC-70	12.500	12.989	12.772	0.166	0.197
AC-71	13.000	13.489	13.272	0.166	0.197

A-Series, AO Rod Scraper

Medium Duty

MFPSEALS
www.mfpseals.com

HYDROWYPE

A-SERIES, AO ROD SCRAPERS

AO scrapers are an extension of the Style-2 scraper design, incorporating an o-ring to seal the clearance between the scraper and housing, thus preventing ingression around the outside of the scraper. The scraper body accommodates both a serpentine spring and an o-ring, positioned in a "double-stacked" groove, with the o-ring positioned on the outer diameter of the body and extending approximately 0.02" in diameter beyond the outer diameter of the body. This permits compression of the o-ring against the housing groove (counterbore), thus sealing the path of ingression outside of the scraper body.

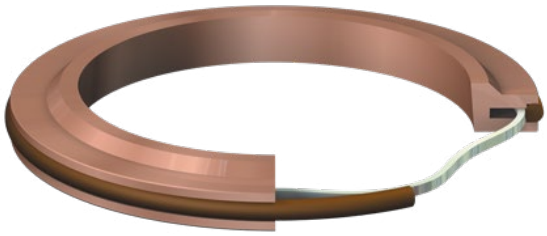

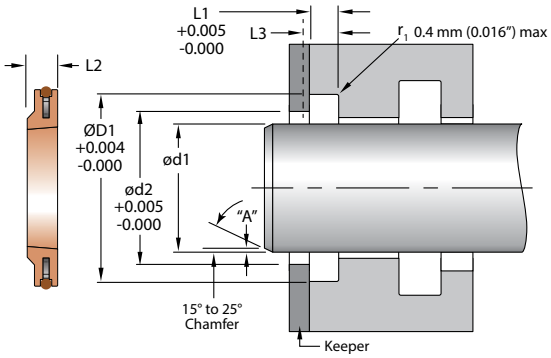

Scrapers are typically held in place by a Keeper/Follower plate or Retaining Ring.

HYDROWYPE PART NUMBER

AO-01B/V7155

SEAL TYPE — DASH# — FINISH — O-RING COMPOUND**

FINISH DESIGNATION

B = UNFINISHED* (Standard)
C = CADMIUM
N = NICKEL
Z = ZINC

*Unfinished parts are susceptible to oxidation and should not be stored for long periods without appropriate treatment. Parts will be shipped in plastic bags with light coating of machine oil to prevent corrosion.

**For a list of available elastomeric compounds for o-rings, please refer to page 45 & 46.

	ROD APPLICATION				
PART NUMBER	ød1	ØD1	ød2	L1	L3
.104" - GROOVE	NOMINAL	+0.004/-0.000	+0.005/-0.000	+0.005/-0.000	+0.005/-0.000
AO-16	1.438	1.739	1.605	0.104	0.135
AO-17	1.500	1.802	1.668	0.104	0.135
AO-18	1.625	1.927	1.793	0.104	0.135
AO-19	1.750	2.052	1.918	0.104	0.135
AO-20	1.875	2.177	2.043	0.104	0.135
AO-21	2.000	2.302	2.178	0.104	0.135
AO-22	2.125	2.427	2.303	0.104	0.135
AO-23	2.250	2.552	2.428	0.104	0.135
AO-24	2.375	2.677	2.553	0.104	0.135
AO-25	2.500	2.802	2.678	0.104	0.135
.119" - GROOVE	NOMINAL	+0.004/-0.000	+0.005/-0.000	+0.005/-0.000	+0.005/-0.000
AO-26	2.625	2.989	2.834	0.119	0.150
AO-27	2.750	3.114	2.959	0.119	0.150
AO-28	2.875	3.239	3.084	0.119	0.150
AO-29	3.000	3.364	3.209	0.119	0.150
AO-30	3.125	3.489	3.334	0.119	0.150
AO-31	3.250	3.614	3.459	0.119	0.150
AO-32	3.375	3.739	3.584	0.119	0.150
AO-33	3.500	3.864	3.709	0.119	0.150

Compound information available on pages 20-37.

Surface Finish: ISO 4287 & Chamfer Information on pages 7-9.
For ISO tolerance charts, refer to pages 12-13.

MFPSEALS®
www.mfpseals.com

A-Series, AO Rod Scraper

Medium Duty

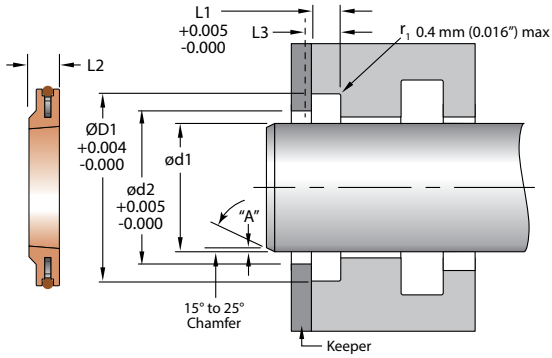

PART NUMBER	ROD APPLICATION				
	ød1	ØD1	ød2	L1	L3
.119" - GROOVE	NOMINAL	+0.004/-0.000	+0.005/-0.000	+0.005/-0.000	+0.005/-0.000
AO-34	3.625	3.989	3.834	0.119	0.150
AO-35	3.750	4.114	3.959	0.119	0.150
AO-36	3.875	4.239	4.084	0.119	0.150
.135" - GROOVE	NOMINAL	+0.004/-0.000	+0.005/-0.000	+0.005/-0.000	+0.005/-0.000
AO-37	4.000	4.427	4.240	0.135	0.166
AO-38	4.125	4.552	4.365	0.135	0.166
AO-39	4.250	4.677	4.490	0.135	0.166
AO-40	4.375	4.802	4.615	0.135	0.166
AO-41	4.500	4.927	4.740	0.135	0.166
AO-42	4.625	5.052	4.865	0.135	0.166
AO-43	4.750	5.177	4.990	0.135	0.166
AO-44	4.875	5.302	5.115	0.135	0.166
AO-45	5.000	5.427	5.240	0.135	0.166
AO-46	5.125	5.552	5.365	0.135	0.166
AO-47	5.250	5.677	5.490	0.135	0.166
AO-48	5.375	5.802	5.615	0.135	0.166
AO-49	5.500	5.927	5.740	0.135	0.166
.151" - GROOVE	NOMINAL	+0.004/-0.000	+0.005/-0.000	+0.005/-0.000	+0.005/-0.000
AO-50	5.625	6.114	5.896	0.151	0.182
AO-51	5.750	6.239	6.022	0.151	0.182
AO-52	5.875	6.364	6.146	0.151	0.182
AO-53	6.000	6.489	6.272	0.151	0.182
AO-54	6.250	6.739	6.522	0.151	0.182
AO-55	6.500	6.989	6.772	0.151	0.182
AO-56	6.750	7.239	7.022	0.151	0.182
AO-57	7.000	7.489	7.272	0.151	0.182
AO-58	7.250	7.739	7.522	0.151	0.182
AO-59	7.500	7.989	7.772	0.151	0.182
AO-60	7.750	8.239	8.022	0.151	0.182
AO-61	8.000	8.489	8.272	0.151	0.182
AO-62	8.500	8.989	8.772	0.151	0.182
AO-63	9.000	9.489	9.272	0.151	0.182
AO-64	9.500	9.989	9.772	0.151	0.182
AO-65	10.000	10.489	10.272	0.151	0.182

Surface Finish: ISO 4287 & Chamfer Information on pages 7-9.
For ISO tolerance charts, refer to pages 12-13.

Compound information available on pages 20-37.

A-Series, AO Rod Scraper

Medium Duty

MFPSEALS®
www.mfpseals.com

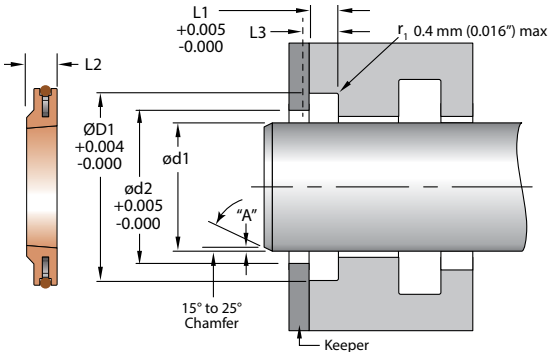

PART NUMBER	ROD APPLICATION				
	ød1	ØD1	ød2	L1	L3
.151" - GROOVE	NOMINAL	+0.004/-0.000	+0.005/-0.000	+0.005/-0.000	+0.005/-0.000
AO-66	10.500	10.989	10.772	0.151	0.182
AO-67	11.000	11.489	11.272	0.151	0.182
.166" - GROOVE	NOMINAL	+0.004/-0.000	+0.005/-0.000	+0.005/-0.000	+0.005/-0.000
AO-68	11.500	11.989	11.772	0.166	0.197
AO-69	12.000	12.489	12.272	0.166	0.197
AO-70	12.500	12.989	12.772	0.166	0.197
AO-71	13.000	13.489	13.272	0.166	0.197

Compound information available on pages 20-37.

Surface Finish: ISO 4287 & Chamfer Information on pages 7-9.
For ISO tolerance charts, refer to pages 12-13.

MFPSEALS
www.mfpseals.com

A-Series, AR-Style Rod Scraper (MS28776R2)

Medium Duty

HYDROWYPE

A-SERIES, AR-STYLE (MS28776R2) MIL-SPEC SCRAPERS

A-Series, AR-Style scrapers are manufactured to conform to **MS28776R2 I/A/W MIL-R-5049**. The AR-Style provides a scraping body with a narrow groove accommodating an o-ring (conformant to **MIL-P-83461**) retained by a copper-alloy band.

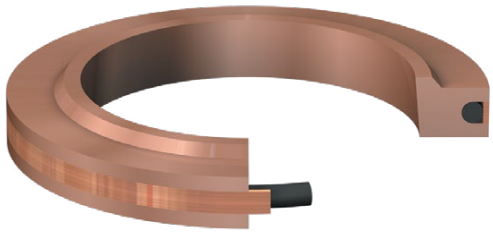

Available materials based on style. Contact MFP Seals for detailed information.

The following certification levels are offered:

1. Manufacturer Certificate of Conformance (CoC).
2. Material and Process certificates plus CoC.
3. Full conformance report (MIL-STD-831 format) plus material, process and manufacturers certs.

Please identify certification requirements that time of requesting a quote and placing order.

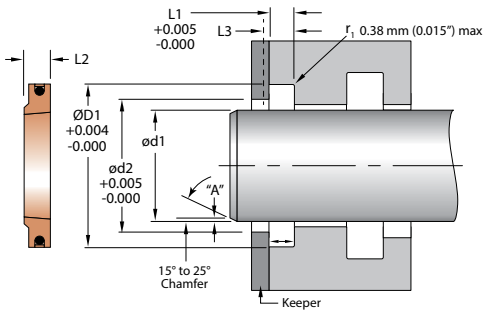

HYDROWYPE PART NUMBER

AR-01-C/ ____

SEAL TYPE | DASH# | FINISH | O-RING COMPOUND**

FINISH DESIGNATION

B = UNFINISHED* N = NICKEL
C = CADMIUM (Standard) Z = ZINC

Scrapers are typically held in place by a Keeper/Follower plate or Retaining Ring.

Groove dimensions in accordance with MS33675.

Rod diameter in conformance with MIL-G-5514 Rev. G.

*Unfinished parts are susceptible to oxidation and should not be stored for long periods without appropriate treatment. Parts will be shipped in plastic bags with light coating of machine oil to prevent corrosion.

**For a list of available elastomeric compounds for o-rings, please refer to page 45 & 46.

For MIL-SPEC certification see MIL-P-83461.

	ROD APPLICATION				
PART NUMBER	ød1	ØD1	ød2	L1	L3
.105" - GROOVE	NOMINAL	+0.004/-0.000	+0.005/-0.000	+0.005/-0.000	+0.005/-0.000
AR-01	0.500	0.760	0.647	0.104	0.136
AR-02	0.563	0.823	0.710	0.104	0.136
AR-03	0.625	0.885	0.772	0.104	0.136
AR-04	0.688	0.948	0.834	0.104	0.136
AR-05	0.750	1.010	0.897	0.104	0.136
AR-06	0.813	1.052	0.949	0.104	0.136
AR-07	0.875	1.114	1.012	0.104	0.136
AR-08	0.938	1.177	1.074	0.104	0.136
AR-09	1.000	1.239	1.136	0.104	0.136
AR-10	1.063	1.302	1.199	0.104	0.136
AR-11	1.125	1.364	1.262	0.104	0.136
AR-12	1.188	1.427	1.324	0.104	0.136
AR-13	1.250	1.489	1.386	0.104	0.136
AR-14	1.313	1.614	1.480	0.104	0.136
AR-15	1.375	1.677	1.542	0.104	0.135
AR-16	1.438	1.739	1.605	0.104	0.135
AR-17	1.500	1.802	1.668	0.104	0.135
AR-18	1.625	1.927	1.793	0.104	0.135
AR-19	1.750	2.052	1.918	0.104	0.135
AR-20	1.875	2.177	2.043	0.104	0.135

Surface Finish: ISO 4287 & Chamfer Information on pages 7-9.
For ISO tolerance charts, refer to pages 12-13.

Compound information available on pages 20-37.

A-Series, AR-Style Rod Scraper (MS28776R2)

Medium Duty

MFPSEALS®
www.mfpseals.com

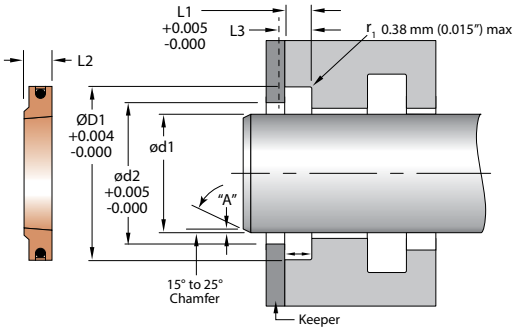

PART NUMBER	ROD APPLICATION				
	ød1	ØD1	ød2	L1	L3
.104" - GROOVE	NOMINAL	+0.004/-0.000	+0.005/-0.000	+0.005/-0.000	+0.005/-0.000
AR-21	2.000	2.302	2.178	0.104	0.135
AR-22	2.125	2.427	2.303	0.104	0.135
AR-23	2.250	2.552	2.428	0.104	0.135
AR-24	2.375	2.677	2.553	0.104	0.135
AR-25	2.500	2.802	2.678	0.104	0.135
.119" - GROOVE	NOMINAL	+0.004/-0.000	+0.005/-0.000	+0.005/-0.000	+0.005/-0.000
AR-26	2.625	2.989	2.834	0.119	0.150
AR-27	2.750	3.114	2.959	0.119	0.150
AR-28	2.875	3.239	3.084	0.119	0.150
AR-29	3.000	3.364	3.209	0.119	0.150
AR-30	3.125	3.489	3.334	0.119	0.150
AR-31	3.250	3.614	3.459	0.119	0.150
AR-32	3.375	3.739	3.584	0.119	0.150
AR-33	3.500	3.864	3.709	0.119	0.150
AR-34	3.625	3.989	3.834	0.119	0.150
AR-35	3.750	4.114	3.959	0.119	0.150
AR-36	3.875	4.239	4.084	0.119	0.150
.135" - GROOVE	NOMINAL	+0.004/-0.000	+0.005/-0.000	+0.005/-0.000	+0.005/-0.000
AR-37	4.000	4.427	4.240	0.135	0.166
AR-38	4.125	4.552	4.365	0.135	0.166
AR-39	4.250	4.677	4.490	0.135	0.166
AR-40	4.375	4.802	4.615	0.135	0.166
AR-41	4.500	4.927	4.740	0.135	0.166
AR-42	4.625	5.052	4.865	0.135	0.166
AR-43	4.750	5.177	4.990	0.135	0.166
AR-44	4.875	5.302	5.115	0.135	0.166
AR-45	5.000	5.427	5.240	0.135	0.166
AR-46	5.125	5.552	5.365	0.135	0.166
AR-47	5.250	5.677	5.490	0.135	0.166
AR-48	5.375	5.802	5.615	0.135	0.166
AR-49	5.500	5.927	5.740	0.135	0.166
.151" - GROOVE	NOMINAL	+0.004/-0.000	+0.005/-0.000	+0.005/-0.000	+0.005/-0.000
AR-50	5.625	6.114	5.896	0.151	0.182
AR-51	5.750	6.239	6.022	0.151	0.182
AR-52	5.875	6.364	6.146	0.151	0.182

Compound information available on pages 20-37.

Surface Finish: ISO 4287 & Chamfer Information on pages 7-9.
For ISO tolerance charts, refer to pages 12-13.

MFPSEALS®
www.mfpseals.com

A-Series, AR-Style Rod Scraper (MS28776R2)

Medium Duty

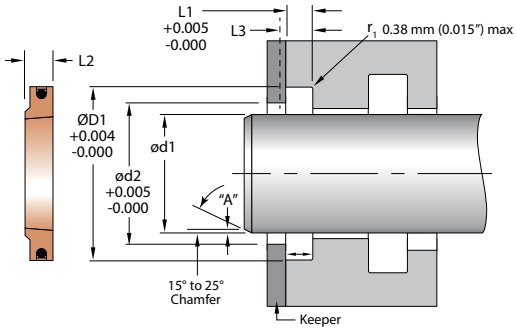

PART NUMBER	ROD APPLICATION				
	ød1	ØD1	ød2	L1	L3
.151" - GROOVE	NOMINAL	+0.004/-0.000	+0.005/-0.000	+0.005/-0.000	+0.005/-0.000
AR-53	6.000	6.489	6.272	0.151	0.182
AR-54	6.250	6.739	6.522	0.151	0.182
AR-55	6.500	6.989	6.772	0.151	0.182
AR-56	6.750	7.239	7.022	0.151	0.182
AR-57	7.000	7.489	7.272	0.151	0.182
AR-58	7.250	7.739	7.522	0.151	0.182
AR-59	7.500	7.989	7.772	0.151	0.182
AR-60	7.750	8.239	8.022	0.151	0.182
AR-61	8.000	8.489	8.272	0.151	0.182
AR-62	8.500	8.989	8.772	0.151	0.182
AR-63	9.000	9.489	9.272	0.151	0.182
AR-64	9.500	9.989	9.772	0.151	0.182
AR-65	10.000	10.489	10.272	0.151	0.182
AR-66	10.500	10.989	10.772	0.151	0.182
AR-67	11.000	11.489	11.272	0.151	0.182
.166" - GROOVE	NOMINAL	+0.004/-0.000	+0.005/-0.000	+0.005/-0.000	+0.005/-0.000
AR-68	11.500	11.989	11.772	0.166	0.197
AR-69	12.000	12.489	12.272	0.166	0.197
AR-70	12.500	12.989	12.772	0.166	0.197
AR-71	13.000	13.489	13.272	0.166	0.197

A-Series, AT - Style-2, Thick Rod Scraper

Medium Duty

MFPSEALS
www.mfpseals.com

HYDROWYPE

A-SERIES, AT STYLE-2 THICK ROD SCRAPER

"Thick" Scraper for rods starting at 13.5" Diameter.

Style-2 provides a scraping body with a narrow groove accommodating a 302 stainless steel serpentine form spring to generate scraping load. The spring is installed in a groove on OD of the scraper body (springs do not contact the rod).

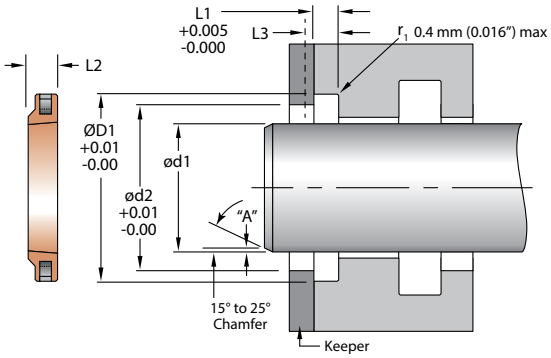

Scrapers are typically held in place by a Keeper/Follower plate or Retaining Ring.

HYDROWYPE PART NUMBER

AT-67-2B

SEAL TYPE — DASH# — STYLE — FINISH

FINISH DESIGNATION

B = UNFINISHED* (Standard) N = NICKEL
C = CADMIUM Z = ZINC

*Unfinished parts are susceptible to oxidation and should not be stored for long periods without appropriate treatment. Parts will be shipped in plastic bags with light coating of machine oil to prevent corrosion.

	ROD APPLICATION				
PART NUMBER	ød1	ØD1	ød2	L1	L3
TOLERNACE	NOMINAL	+.01/-.000	+.01/-.000	+.01/-.000	+.01/-.000
AT-73	13.500	14.508	13.962	0.260	0.291
AT-75	14.000	15.008	14.462	0.260	0.291
AT-77	14.500	15.508	14.962	0.260	0.291
AT-79	15.000	16.008	15.462	0.260	0.291
AT-81	15.500	16.508	15.962	0.260	0.291
AT-83	16.000	17.008	16.462	0.260	0.291
AT-85	16.500	17.508	16.962	0.260	0.291
AT-87	17.000	18.008	17.462	0.260	0.291
AT-89	17.500	18.508	17.962	0.260	0.291
AT-91	18.000	19.008	18.462	0.260	0.291
AT-93	18.500	19.508	18.962	0.260	0.291
AT-95	19.000	20.008	19.462	0.260	0.291
AT-97	19.500	20.508	19.962	0.260	0.291
AT-99	20.000	21.008	20.462	0.260	0.291
AT-101	20.500	21.508	20.962	0.260	0.291
AT-103	21.000	22.008	21.462	0.260	0.291
AT-105	21.500	22.508	21.962	0.260	0.291
AT-107	22.000	23.008	22.462	0.260	0.291
AT-109	22.500	23.508	22.962	0.260	0.291
AT-111	23.000	24.008	23.462	0.260	0.291
AT-113	23.500	24.508	23.962	0.260	0.291
AT-115	24.000	25.008	24.462	0.260	0.291
AT-117	24.500	25.508	24.962	0.260	0.291

Compound information available on pages 20-37.

Surface Finish: ISO 4287 & Chamfer Information on pages 7-9.
For ISO tolerance charts, refer to pages 12-13.

MFPSEALS®
www.mfpseals.com

A-Series, AT - Style-2, Thick Rod Scraper

Medium Duty

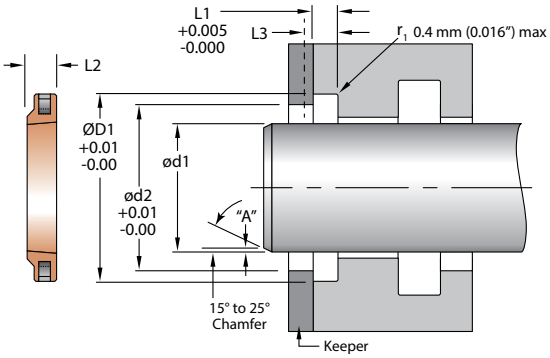

PART NUMBER	ROD APPLICATION				
	ød1	ØD1	ød2	L1	L3
TOLERANCE	NOMINAL	+.01/-.000	+.01/-.000	+.01/-.000	+.01/-.000
AT-119	25.000	26.008	25.462	0.260	0.291
AT-120	26.000	27.008	26.462	0.260	0.291
AT-121	27.000	28.008	27.462	0.260	0.291
AT-122	28.000	29.008	28.462	0.260	0.291
AT-123	29.000	30.008	29.462	0.260	0.291
AT-124	30.000	31.008	30.462	0.260	0.291
AT-125	31.000	32.008	31.462	0.260	0.291
AT-126	32.000	33.008	32.462	0.260	0.291
AT-127	33.000	34.008	33.462	0.260	0.291
AT-128	34.000	35.008	34.462	0.260	0.291
AT-129	35.000	36.008	35.462	0.260	0.291
AT-130	36.000	37.008	36.462	0.260	0.291
AT-131	37.000	38.008	37.462	0.260	0.291
AT-132	38.000	39.008	38.462	0.260	0.291
AT-133	39.000	40.008	39.462	0.260	0.291
AT-134	40.000	41.008	40.462	0.260	0.291

Surface Finish: ISO 4287 & Chamfer Information on pages 7-9.
For ISO tolerance charts, refer to pages 12-13.

Compound information available on pages 20-37.

AD - Adapter

MFPSEALS
www.mfpseals.com

HYDROWYPE

AD - ADAPTER

Standard AD-Series adapters are comprised of a Keeper (top) and Follower (bottom) plate with a built-in "groove" design to retain and A-Series or AI-Series wiper. The adapter is usually affixed to the end-cap or gland by means of machine screws or bolts, often time utilizing an existing bolt pattern for the gland. Typically manufactured of 22 gauge mild steel (0.028 inch) and coated/plated, adapters may be supplied with or without a customers bolt pattern of holes punched into the flange.

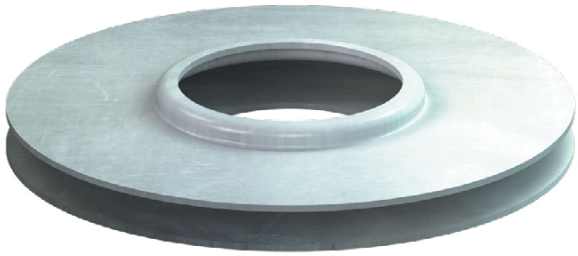

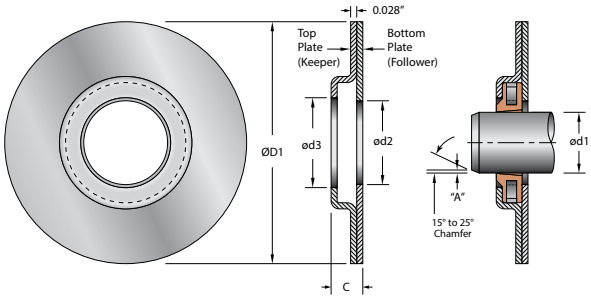

Scrapers are typically held in place by a Keeper/Follower plate or Retaining Ring.

HYDROWYPE PART NUMBER

AD-01P

SEAL TYPE — DASH# — FINISH

FINISH DESIGNATION

B = UNFINISHED* P = PRIMED (Standard)
N = NICKEL Z = ZINC

*Unfinished parts are susceptible to oxidation and should not be stored for long periods without appropriate treatment. Parts will be shipped in plastic bags with light coating of machine oil to prevent corrosion.

	ROD APPLICATION				
PART NUMBER	ød1 (ROD)	ØD1	ød2	ød3	C
AD-01	0.500	2.000	0.510	0.637	0.136
AD-02	0.563	2.000	0.572	0.700	0.136
AD-03	0.625	2.000	0.635	0.762	0.136
AD-04	0.688	2.250	0.697	0.824	0.136
AD-05	0.750	2.250	0.760	0.887	0.136
AD-06	0.813	2.250	0.822	0.939	0.136
AD-07	0.875	2.500	0.885	1.002	0.136
AD-08	0.938	2.500	0.947	1.064	0.136
AD-09	1.000	2.500	1.010	1.126	0.136
AD-10	1.063	2.625	1.072	1.189	0.136
AD-11	1.125	2.625	1.135	1.252	0.136
AD-12	1.188	2.625	1.197	1.310	0.136
AD-13	1.250	2.875	1.260	1.376	0.136
AD-14	1.313	2.875	1.322	1.470	0.136
AD-15	1.375	2.875	1.385	1.532	0.136
AD-16	1.438	3.125	1.447	1.595	0.136
AD-17	1.500	3.125	1.510	1.658	0.136
AD-18	1.625	3.125	1.635	1.783	0.136
AD-19	1.750	3.375	1.760	1.908	0.136
AD-20	1.875	3.375	1.885	2.033	0.136
AD-21	2.000	3.750	2.010	2.158	0.136
AD-22	2.125	3.750	2.135	2.283	0.136
AD-23	2.250	3.750	2.260	2.408	0.136
AD-24	2.375	4.250	2.385	2.533	0.136

Compound information available on pages 20-37.

Surface Finish: ISO 4287 & Chamfer Information on pages 7-9.
For ISO tolerance charts, refer to pages 12-13.

MFPSEALS®
www.mfpseals.com

AD - Adapter

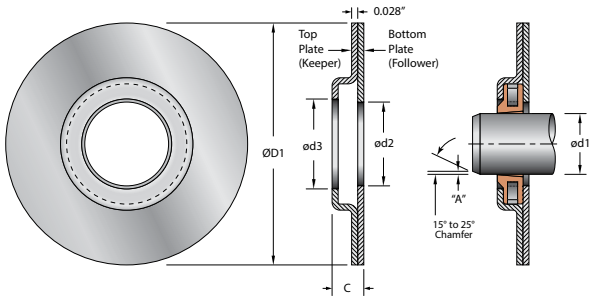

PART NUMBER	ROD APPLICATION				
	ød1 (ROD)	ØD1	ød2	ød3	C
AD-25	2.500	4.250	2.600	2.658	0.136
AD-26	2.625	4.250	2.635	2.814	0.151
AD-27	2.750	4.500	2.760	2.939	0.151
AD-28	2.875	4.500	2.885	3.064	0.151
AD-29	3.000	4.500	3.010	3.189	0.151
AD-30	3.125	5.000	3.135	3.314	0.151
AD-31	3.250	5.000	3.260	3.439	0.151
AD-32	3.375	5.000	3.385	3.564	0.151
AD-33	3.500	5.312	3.510	3.689	0.151
AD-34	3.625	5.312	3.635	3.814	0.151
AD-35	3.750	5.312	3.760	3.939	0.151
AD-36	3.875	5.750	3.865	4.064	0.151
AD-37	4.000	5.750	4.010	4.220	0.167
AD-38	4.125	5.750	4.135	4.345	0.167
AD-39	4.250	6.125	4.260	4.470	0.167
AD-40	4.375	6.125	4.385	4.595	0.167
AD-41	4.500	6.125	4.510	4.720	0.167
AD-42	4.625	6.500	4.635	4.845	0.167
AD-43	4.750	6.500	4.760	4.970	0.167
AD-44	4.875	6.500	4.885	5.095	0.167
AD-45	5.000	6.875	5.010	5.220	0.167
AD-46	5.125	6.875	5.135	5.345	0.167
AD-47	5.250	6.875	5.260	5.470	0.167
AD-48	5.375	7.375	5.385	5.595	0.167
AD-49	5.500	7.375	5.510	5.720	0.167
AD-50	5.625	7.375	5.635	5.876	0.183
AD-51	5.750	7.750	5.760	6.002	0.183
AD-52	5.875	7.750	5.865	6.126	0.183
AD-53	6.000	7.750	6.010	6.252	0.183
AD-54	6.250	8.500	6.260	6.502	0.183
AD-55	6.500	8.500	6.510	6.752	0.183
AD-56	6.750	8.500	6.760	7.002	0.183
AD-57	7.000	9.250	7.010	7.252	0.183
AD-58	7.250	9.250	7.260	7.502	0.183
AD-59	7.500	9.250	7.510	7.752	0.183
AD-60	7.750	10.250	7.760	8.002	0.183

Surface Finish: ISO 4287 & Chamfer Information on pages 7-9.
For ISO tolerance charts, refer to pages 12-13.

Compound information available on pages 20-37.

AD - Adapter

MFPSEALS®
www.mfpseals.com

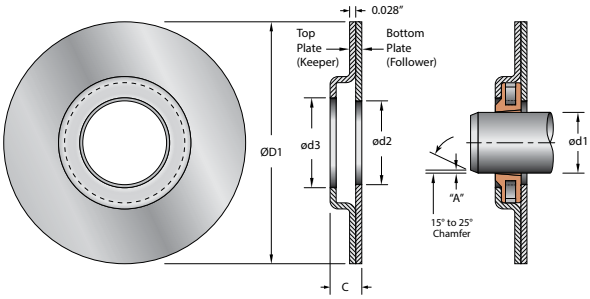

PART NUMBER	ROD APPLICATION				
	ød1 (ROD)	ØD1	ød2	ød3	C
AD-61	8.000	10.250	8.010	8.252	0.183
AD-62	8.500	10.250	8.510	8.752	0.183
AD-63	9.000	11.750	9.010	9.252	0.183
AD-64	9.500	11.750	9.510	9.752	0.183
AD-65	10.000	11.750	10.010	10.252	0.183
AD-66	10.500	13.250	10.510	10.752	0.183
AD-67	11.000	13.250	11.010	11.252	0.183
AD-68	11.500	13.250	11.510	11.752	0.198
AD-69	12.000	14.750	12.010	12.252	0.198
AD-70	12.500	14.750	12.510	12.752	0.198
AD-71	13.000	14.750	13.010	13.252	0.198

Compound information available on pages 20-37.

Surface Finish: ISO 4287 & Chamfer Information on pages 7-9.
For ISO tolerance charts, refer to pages 12-13.

MFPSEALS®
www.mfpseals.com

D-Series, DR, DRH, DRHS - Heavy Duty Rod Scrapers

Heavy Duty

HYDROWYPE

D-SERIES, DR, DRH, DRHS, HEAVY-DUTY ROD SCRAPERS

D-Series scrapers are produced in several standard styles - DR (for compatibility with historical designs), DRH (with o-ring and serpentine spring) - recommended for new applications, and DRHS (slotted heel) - for pairing with secondary wiper. D-series scrapers are designed to be installed using a retainer (keeper-plate or retaining ring) but can be configured in an installation vessel to permit press-in installation. D-Series scrapers have a large cross-section, providing increased resistance to the forces generated by contaminants bonded to the surface of the rod. These forces tend to cause the scraper body to lift away from the rod surface, reducing the effectiveness of the scraper.

The heavier body of the D-Series allows for a heavier serpentine spring to be used, which generates more clamping load to resist the over-ride of strongly bonded contaminants. DRH D-Series scrapers use a high-load serpentine spring and an O-ring that protrudes 0.02" beyond the OD of the scraper body to seal against the housing groove in the gland and prevent outer-ingression. This design results in the highest performing scraper. DRHS D-Series scraper has a slotted heel that allows for the egress of contaminants that bypass the scraper and accumulate between the scraper and a wiper or other secondary exclusion seal. However, designers should consider the further accumulation of these particles.

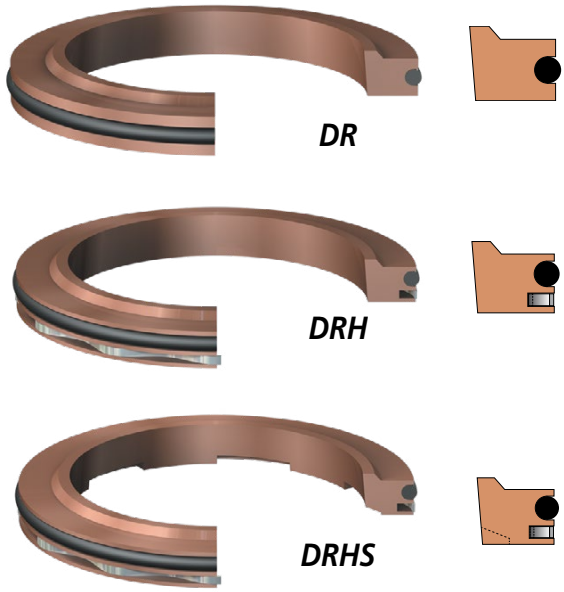

Available compounds based on style.
Contact MFP Seals for detailed information.

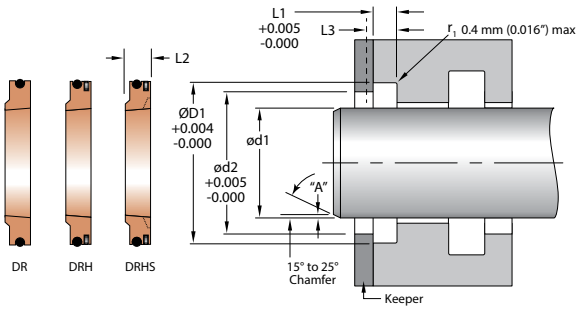

Scrapers are typically held in place by a Keeper/Follower plate or Retaining Ring.

HYDROWYPE PART NUMBER

DRH-01C/N6001

SEAL TYPE | DASH# | FINISH | O-RING COMPOUND**

FINISH DESIGNATION

B = UNFINISHED* (Standard) N = NICKEL
C = CADMIUM Z = ZINC

*Unfinished parts are susceptible to oxidation and should not be stored for long periods without appropriate treatment. Parts will be shipped in plastic bags with light coating of machine oil to prevent corrosion.

**For a list of available elastomeric compounds for o-rings, please refer to page 45 & 46.

MFP PART NUMBER	ROD APPLICATION ød1	ØD1	ød2	L1	L3
.250" - GROOVE	NOMINAL	+0.004/-0.000	+0.005/-0.000	+0.005/-0.000	+0.005/-0.000
DRH-17	1.500	1.875	1.638	0.250	0.280
DRH-18	1.625	2.000	1.763	0.250	0.280
DRH-19	1.750	2.125	1.888	0.250	0.280
DRH-20	1.875	2.250	2.013	0.250	0.280
DRH-21	2.000	2.500	2.138	0.250	0.280
DRH-22	2.125	2.625	2.263	0.250	0.280
DRH-23	2.250	2.750	2.388	0.250	0.280
DRH-24	2.375	2.875	2.513	0.250	0.280
DRH-25	2.500	3.000	2.638	0.250	0.280
DRH-26	2.625	3.125	2.794	0.250	0.280
DRH-27	2.750	3.250	2.919	0.250	0.280

Surface Finish: ISO 4287 & Chamfer Information on pages 7-9.
For ISO tolerance charts, refer to pages 12-13.

Compound information available on pages 20-37.

D-Series, DR, DRH, DRHS - Heavy Duty Rod Scrapers

Heavy Duty

MFPSEALS
www.mfpseals.com

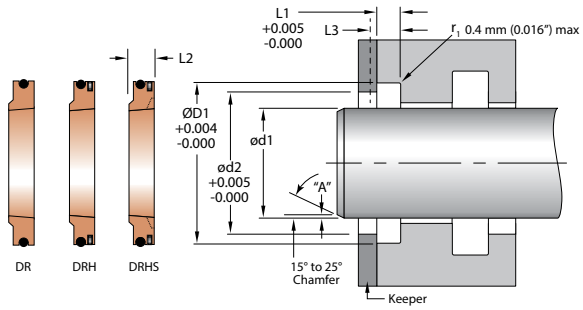

MFP PART NUMBER	ROD APPLICATION ød1	ØD1	ød2	L1	L3
.250" - GROOVE	NOMINAL	+0.004/-0.000	+0.005/-0.000	+0.005/-0.000	+0.005/-0.000
DRH-28	2.875	3.375	3.044	0.250	0.280
DRH-29	3.000	3.500	3.169	0.250	0.280
DRH-30	3.125	3.625	3.294	0.250	0.290
DRH-31	3.250	3.750	3.419	0.250	0.290
DRH-32	3.375	3.875	3.544	0.250	0.290
DRH-33	3.500	4.000	3.669	0.250	0.290
DRH-34	3.625	4.125	3.794	0.250	0.290
DRH-35	3.750	4.250	3.919	0.250	0.290
DRH-36	3.875	4.375	4.044	0.250	0.290
DRH-37	4.000	4.500	4.200	0.250	0.290
DRH-38	4.125	4.625	4.325	0.250	0.290
DRH-39	4.250	4.750	4.450	0.250	0.290
DRH-40	4.375	4.875	4.575	0.250	0.290
DRH-41	4.500	5.250	4.700	0.250	0.300
DRH-42	4.625	5.375	4.825	0.250	0.300
DRH-43	4.750	5.500	4.950	0.250	0.300
DRH-44	4.875	5.625	5.075	0.250	0.300
DRH-45	5.000	5.750	5.200	0.250	0.300
.375" - GROOVE	NOMINAL	+0.004/-0.000	+0.005/-0.000	+0.005/-0.000	+0.005/-0.000
DRH-46	5.125	5.875	5.325	0.375	0.425
DRH-47	5.250	6.000	5.450	0.375	0.425
DRH-48	5.375	6.125	5.575	0.375	0.425
DRH-49	5.500	6.250	5.700	0.375	0.425
DRH-50	5.625	6.375	5.856	0.375	0.425
DRH-51	5.750	6.500	5.982	0.375	0.425
DRH-52	5.875	6.625	6.106	0.375	0.425
DRH-53	6.000	6.750	6.232	0.375	0.425
DRH-54	6.250	7.000	6.482	0.375	0.425
DRH-55	6.500	7.250	6.732	0.375	0.425
DRH-56	6.750	7.500	6.982	0.375	0.425
DRH-57	7.000	7.750	7.232	0.375	0.425
DRH-58	7.250	8.000	7.482	0.375	0.425
DRH-59	7.500	8.250	7.732	0.375	0.425
DRH-60	7.750	8.500	7.982	0.375	0.425
DRH-61	8.000	8.750	8.232	0.375	0.425

Compound information available on pages 20-37.

Surface Finish: ISO 4287 & Chamfer Information on pages 7-9.
For ISO tolerance charts, refer to pages 12-13.

MFPSEALS®
www.mfpseals.com

D-Series, DR, DRH, DRHS - Heavy Duty Rod Scrapers

Heavy Duty

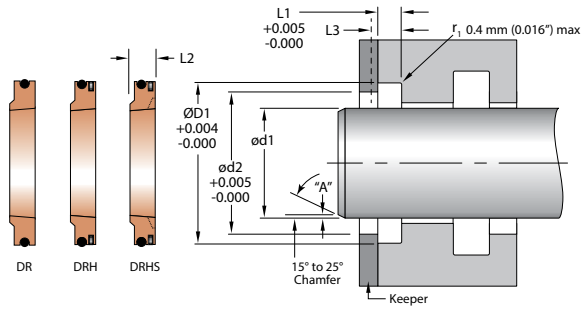

MFP PART NUMBER	ød1	ØD1	ød2	L1	L3
	SNAP-IN ROD APPLICATION				
.375" - GROOVE	NOMINAL	+0.004/-0.000	+0.005/-0.000	+0.005/-0.000	+0.005/-0.000
DRH-62	8.500	9.250	8.732	0.375	0.425
DRH-63	9.000	9.750	9.232	0.375	0.425
DRH-64	9.500	10.250	9.732	0.375	0.425
DRH-65	10.000	11.000	10.232	0.375	0.455
DRH-66	10.500	11.500	10.732	0.375	0.455
DRH-67	11.000	12.000	11.232	0.375	0.455
DRH-68	11.500	12.500	11.732	0.375	0.455
DRH-69	12.000	13.000	12.232	0.375	0.455
DRH-70	12.500	13.500	12.732	0.375	0.455
.500" - GROOVE	NOMINAL	+0.004/-0.000	+0.005/-0.000	+0.005/-0.000	+0.005/-0.000
DRH-71	13.000	14.000	13.232	0.500	0.580

Metallic Rod Scraper - S

A product of MFP Seals.

MFPSEALS®
www.mfpseals.com

Light Duty

METALLIC ROD SCRAPER - S

S - Metallic Rod Scrapers effectively remove contaminants from the rod surface, helping to prevent the intrusion of foreign materials, allowing packings to last longer and maintain a better seal. They are self-adjusting, low-friction, long-lasting and are simple to install.

Our S scraper is comprised of two flexible brass or bronze rings encased in a synthetic rubber cushion. The cushion ring helps absorb side loads while exerting an inward force to keep the metal scraping rings in contact with the rod surface.

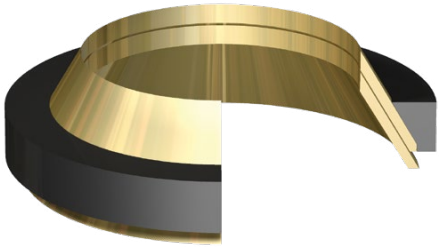

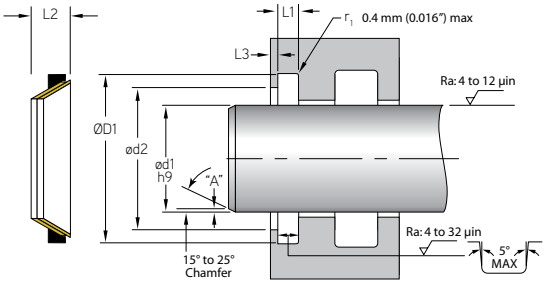

MFP PART NUMBER

S-3435-0500-BN

SEAL TYPE | SERIES | ROD | CUSHION MATERIAL

Cushion - FKM
Scraper Rings - Brass or Bronze

	SNAP-IN ROD APPLICATION				
MFP PART NUMBER	**ød1**	**ØD1**	**ød2**	**L1**	**L3**
.125" - GROOVE	h9	+.003/-.003	+.000/-.010	+.003/-.001	+.015/-.000
S-3435-0500-BN	0.500	0.750	0.714	0.125	0.018
S-3435-0625-BN	0.625	0.875	0.839	0.125	0.018
S-3435-0750-BN	0.750	1.000	0.964	0.125	0.018
S-3435-1000-BN	1.000	1.250	1.214	0.125	0.018
.187" - GROOVE	h9	+.003/-.003	+.000/-.010	+.003/-.001	+.015/-.000
S-3436-0750-BN	0.750	1.125	1.082	0.187	0.022
S-3436-0875-BN	0.875	1.250	1.207	0.187	0.022
S-3436-1000-BN	1.000	1.375	1.332	0.187	0.022
S-3436-1125-BN	1.125	1.500	1.457	0.187	0.022
S-3436-1250-BN	1.250	1.625	1.582	0.187	0.022
S-3436-1375-BN	1.375	1.750	1.707	0.187	0.022
S-3436-1500-BN	1.500	1.875	1.832	0.187	0.022
S-3436-1625-BN	1.625	2.000	1.957	0.187	0.022
S-3436-1750-BN	1.750	2.125	2.082	0.187	0.022
S-3436-1875-BN	1.875	2.250	2.207	0.187	0.022
S-3436-2000-BN	2.000	2.375	2.332	0.187	0.022
S-3436-2125-BN	2.125	2.500	2.457	0.187	0.022
S-3436-2250-BN	2.250	2.625	2.582	0.187	0.022
S-3436-2500-BN	2.500	2.875	2.832	0.187	0.022

Compound information available on pages 20-37.

Surface Finish: ISO 4287 & Chamfer Information on pages 7-9.
For ISO tolerance charts, refer to pages 12-13.

MFPSEALS®
www.mfpseals.com

Metallic Rod Scraper - S

A product of MFP Seals.

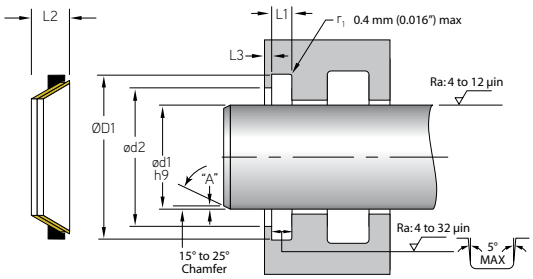

MFP PART NUMBER	ød1	ØD1	ød2	L1	L3
	SNAP-IN ROD APPLICATION				
.250" - GROOVE	h9	+.003/-.003	+.000/-.010	+.003/-.001	+.015/-.000
S-3437-2000-BN	2.000	2.500	2.440	0.250	0.030
S-3437-2125-BN	2.125	2.625	2.565	0.250	0.030
S-3437-2250-BN	2.250	2.750	2.690	0.250	0.030
S-3437-2500-BN	2.500	3.000	2.940	0.250	0.030
S-3437-2750-BN	2.750	3.250	3.190	0.250	0.030
S-3437-2875-BN	2.875	3.375	3.315	0.250	0.030
S-3437-3000-BN	3.000	3.500	3.440	0.250	0.030
S-3437-3250-BN	3.250	3.750	3.690	0.250	0.030
S-3437-3500-BN	3.500	4.000	3.940	0.250	0.030
S-3437-4000-BN	4.000	4.500	4.440	0.250	0.030
S-3437-4250-BN	4.250	4.750	4.690	0.250	0.030
.375" - GROOVE	h9	+.003/-.003	+.000/-.010	+.003/-.001	+.015/-.000
S-3438-4500-BN	4.500	5.250	5.160	0.375	0.045
S-3438-5000-BN	5.000	5.750	5.660	0.375	0.045
S-3438-5500-BN	5.500	6.250	6.160	0.375	0.045
S-3438-6000-BN	6.000	6.750	6.660	0.375	0.045

Surface Finish: ISO 4287 & Chamfer Information on pages 7-9.
For ISO tolerance charts, refer to pages 12-13.

Compound information
available on pages 20-37.

Metallic Rod Scraper - SW

A product of MFP Seals.

MFPSEALS®
www.mfpseals.com

Light Duty

METALLIC ROD SCRAPER - SW

Metallic Rod Scrapers effectively remove contaminants from the rod surface, helping to prevent the intrusion of foreign materials, allowing packings to last longer and maintain a better seal. They are self-adjusting, low-friction, long-lasting and are simple to install.

Our SW scraper is comprised of two flexible brass or bronze rings encased in a synthetic rubber cushion with a secondary rubber cushion under the scraper rings for improved stability and added sealing against the elements. The cushion ring helps absorb side loads while exerting an inward force to keep the metal scraping rings in contact with the rod surface.

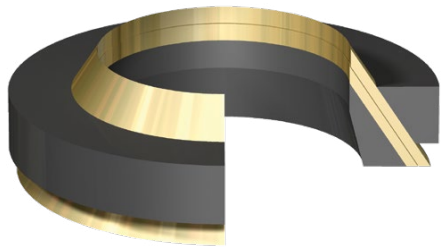

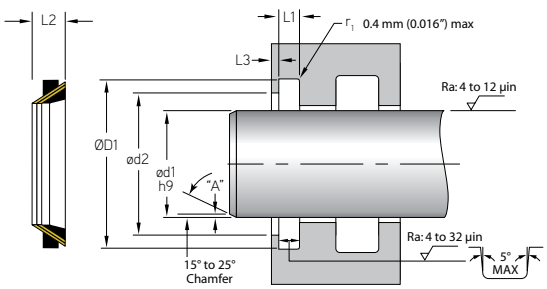

MFP PART NUMBER

SW-3435-0500-BN

SEAL TYPE — SERIES — ROD — CUSHION MATERIAL

Cushion - FKM
Scraper Rings - Brass or Bronze

	SNAP-IN ROD APPLICATION				
MFP PART NUMBER	**ød1**	**ØD1**	**ød2**	**L1**	**L3**
.125" - GROOVE	h9	+.003/-.003	+.000/-.010	+.003/-.001	+.015/-.000
SW-3435-0500-BN	0.500	0.750	0.714	0.125	0.018
SW-3435-0625-BN	0.625	0.875	0.839	0.125	0.018
SW-3435-0750-BN	0.750	1.000	0.964	0.125	0.018
SW-3435-1000-BN	1.000	1.250	1.214	0.125	0.018
.187" - GROOVE	h9	+.003/-.003	+.000/-.010	+.003/-.001	+.015/-.000
SW-3436-0750-BN	0.750	1.125	1.082	0.187	0.022
SW-3436-0875-BN	0.875	1.250	1.207	0.187	0.022
SW-3436-1000-BN	1.000	1.375	1.332	0.187	0.022
SW-3436-1125-BN	1.125	1.500	1.457	0.187	0.022
SW-3436-1250-BN	1.250	1.625	1.582	0.187	0.022
SW-3436-1375-BN	1.375	1.750	1.707	0.187	0.022
SW-3436-1500-BN	1.500	1.875	1.832	0.187	0.022
SW-3436-1625-BN	1.625	2.000	1.957	0.187	0.022
SW-3436-1750-BN	1.750	2.125	2.082	0.187	0.022
SW-3436-1875-BN	1.875	2.250	2.207	0.187	0.022
SW-3436-2000-BN	2.000	2.375	2.332	0.187	0.022
SW-3436-2500-BN	2.500	2.875	2.832	0.187	0.022

Compound information available on pages 20-37.

Surface Finish: ISO 4287 & Chamfer Information on pages 7-9.
For ISO tolerance charts, refer to pages 12-13.

MFPSEALS®
www.mfpseals.com

Metallic Rod Scraper - SW

A product of MFP Seals.

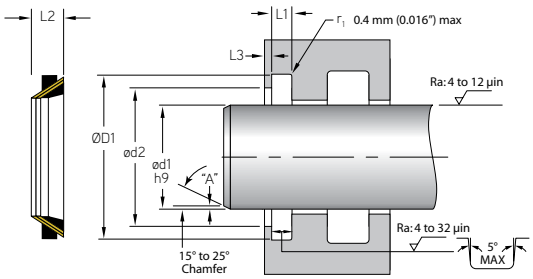

MFP PART NUMBER	ød1	ØD1	ød2	L1	L3
	SNAP-IN ROD APPLICATION				
.250" - GROOVE	h9	+.003/-.003	+.000/-.010	+.003/-.001	+.015/-.000
SW-3437-2000-BN	2.000	2.500	2.440	0.250	0.030
SW-3437-2125-BN	2.125	2.625	2.565	0.250	0.030
SW-3437-2250-BN	2.250	2.750	2.690	0.250	0.030
SW-3437-2500-BN	2.500	3.000	2.940	0.250	0.030
SW-3437-2750-BN	2.750	3.250	3.190	0.250	0.030
SW-3437-2875-BN	2.875	3.375	3.315	0.250	0.030
SW-3437-3000-BN	3.000	3.500	3.440	0.250	0.030
SW-3437-3250-BN	3.250	3.750	3.690	0.250	0.030
SW-3437-3500-BN	3.500	4.000	3.940	0.250	0.030
SW-3437-4000-BN	4.000	4.500	4.440	0.250	0.030
.375" - GROOVE	h9	+.003/-.003	+.000/-.010	+.003/-.001	+.015/-.000
SW-3438-4500-BN	4.500	5.250	5.160	0.375	0.045
SW-3438-5000-BN	5.000	5.750	5.660	0.375	0.045
SW-3438-5500-BN	5.500	6.250	6.160	0.375	0.045
SW-3438-6000-BN	6.000	6.750	6.660	0.375	0.045

Surface Finish: ISO 4287 & Chamfer Information on pages 7-9.
For ISO tolerance charts, refer to pages 12-13.

Compound information available on pages 20-37.

Metallic Rod Scraper - SC

A product of MFP Seals.

MFPSEALS®
www.mfpseals.com

Light Duty

METALLIC ROD SCRAPER - SC

Metallic Rod Scrapers effectively remove contaminants from the rod surface, helping to prevent the intrusion of foreign materials, allowing packings to last longer and maintain a better seal. They are self-adjusting, low-friction, long-lasting and are simple to install.

Our SC scraper is comprised of two flexible brass or bronze rings encased in a synthetic rubber cushion. The cushion ring helps absorb side loads while exerting an inward force to keep the metal scraping rings in contact with the rod surface. A bronze case is added for increased durability where a press-in scraper is required.

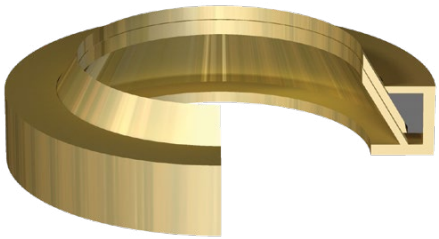

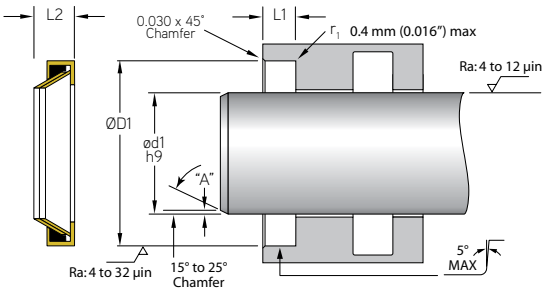

MFP PART NUMBER

SC-3436-1000-BN

SEAL TYPE — SERIES — ROD — CUSHION MATERIAL

Case - Bronze
Cushion - FKM
Scraper Rings - Brass or Bronze

	PRESS-IN ROD APPLICATION		
MFP PART NUMBER	**ød1**	**ØD1**	**L1**
.250" - GROOVE	h9	+.001/-.001	+.015/-.000
SC-3436-1000-BN	1.000	1.437	0.250
SC-3436-1125-BN	1.125	1.562	0.250
SC-3436-1250-BN	1.250	1.687	0.250
SC-3436-1375-BN	1.375	1.812	0.250
SC-3436-1500-BN	1.500	1.937	0.250
SC-3436-1625-BN	1.625	2.062	0.250
SC-3436-1750-BN	1.750	2.187	0.250
SC-3436-1875-BN	1.875	1.312	0.250
SC-3436-2000-BN	2.000	2.437	0.250
.312" - GROOVE	h9	+.001/-.001	+.015/-.000
SC-3437-2000-BN	2.000	2.562	0.312

Compound information available on pages 20-37.

Surface Finish: ISO 4287 & Chamfer Information on pages 7-9.
For ISO tolerance charts, refer to pages 12-13.

MFP SEALS
www.mfpseals.com

Metallic Rod Scraper - SWC

A product of MFP Seals.

Light Duty

METALLIC ROD SCRAPER - SWC

Metallic Rod Scrapers effectively remove contaminants from the rod surface, helping to prevent the intrusion of foreign materials, allowing packings to last longer and maintain a better seal. They are self-adjusting, low-friction, long-lasting and are simple to install.

Our SWC scraper is comprised of two flexible brass or bronze rings encased in a synthetic rubber cushion with a secondary rubber cushion under the scraper rings for improved stability and added sealing against the elements. The cushion ring helps absorb side loads while exerting an inward force to keep the metal scraping rings in contact with the rod surface. A bronze case is added for increased durability where a press-in wiper is required.

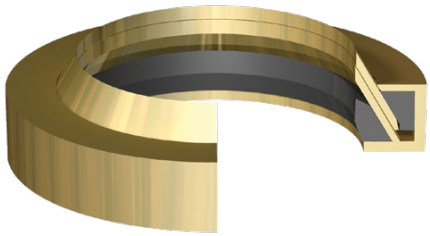

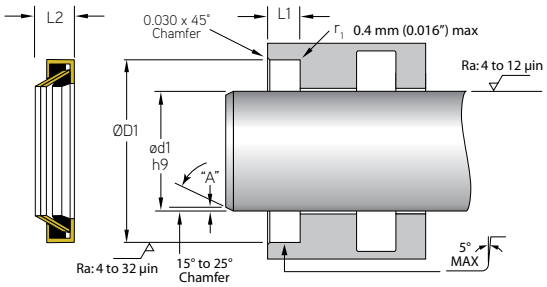

MFP PART NUMBER

SWC-3435-0500-BN

SEAL TYPE | SERIES | ROD | CUSHION MATERIAL

Case - Bronze
Cushion - FKM
Scraper Rings - Brass or Bronze

	PRESS-IN ROD APPLICATION		
MFP PART NUMBER	**ød1**	**ØD1**	**L1**
.250" - GROOVE	h9	+.001/-.001	+.015/-.000
SWC-3436-1000-BN	1.000	1.437	0.250
SWC-3436-1125-BN	1.125	1.562	0.250
SWC-3436-1250-BN	1.250	1.687	0.250
SWC-3436-1375-BN	1.375	1.812	0.250
SWC-3436-1500-BN	1.500	1.937	0.250
SWC-3436-1625-BN	1.625	2.062	0.250
SWC-3436-1750-BN	1.750	2.187	0.250
SWC-3436-1875-BN	1.875	2.312	0.250
SWC-3436-2000-BN	2.000	2.437	0.250
.312" - GROOVE	h9	+.001/-.001	+.015/-.000
SWC-3437-2000-BN	2.000	2.562	0.312

Surface Finish: ISO 4287 & Chamfer Information on pages 7-9.
For ISO tolerance charts, refer to pages 12-13.

Compound information available on pages 20-37.

Metallic Rod Scraper - SWCP

A product of MFP Seals.

MFPSEALS®
www.mfpseals.com

Light Duty

METALLIC ROD SCRAPER - SWCP PREMIUM

Metallic Rod Scrapers effectively remove contaminants from the rod surface, helping to prevent the intrusion of foreign materials, allowing packings to last longer and maintain a better seal. They are self-adjusting, low-friction, long-lasting and are simple to install.

Our SWCP "Premium" Metallic Rod Scraper is comprised of two flexible brass or bronze rings encased in a synthetic rubber cushion with a secondary abrasion resistant, virgin PTFE, elastomeric wiper under the scraper rings for improved stability and added sealing/ scraping to remove extremely fine abrasive materials. The cushion ring helps absorb side loads while exerting an inward force to keep the metal scraping rings in contact with the rod surface. A bronze case is added for increased durability where a press-in scraper is required.

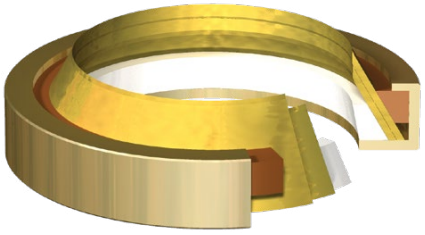

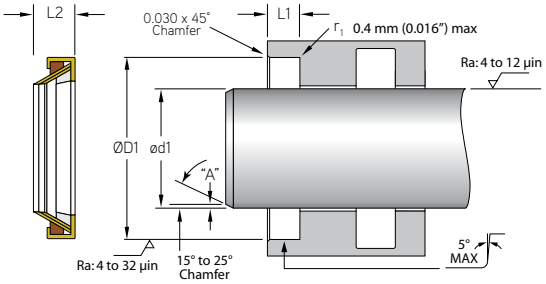

MFP PART NUMBER

SWCP-1500X2000-312VT/TF

SEAL TYPE | ød1 | ØD1 | L1 | CUSHION MATERIAL

Case - Bronze
Cushion - Brown Viton® / T1000
Scraper Rings - Brass

MFP PART NUMBER	PRESS-IN ROD APPLICATION ød1	ØD1	L1
.312" - GROOVE	h9	+.001/-.001	+.015/-.000
SWCP-0875-1375-312VT/TF	0.875	1.375	0.312
SWCP-1000-1500-312VT/TF	1.000	1.500	0.312
SWCP-1250-1750-312VT/TF	1.250	1.750	0.312
SWCP-1500-2000-312VT/TF	1.500	2.000	0.312
SWCP-3000-3625-312VT/TF	3.000	3.625	0.312
SWCP-5000-5625-312VT/TF	5.000	5.625	0.312
SWCP-5500-6125-312VT/TF	5.500	6.125	0.312

Compound information available on pages 20-37.

Surface Finish: ISO 4287 & Chamfer Information on pages 7-9.
For ISO tolerance charts, refer to pages 12-13.

MFPSEALS®
www.mfpseals.com

PWS - Tight Tolerance Composite Wear Strip - C4000

A product of MFP Seals.

PWS - C4000 TIGHT TOLERANCE COMPOSITE WEAR STRIP

MFP Seals' proprietary Tight Tolerance C4000 Composite Wear Strip is designed to eliminate scoring in hydraulic and pneumatic applications by preventing metal to metal contact. Sold by the roll.

See page 6 for guide ring cutting instructions.

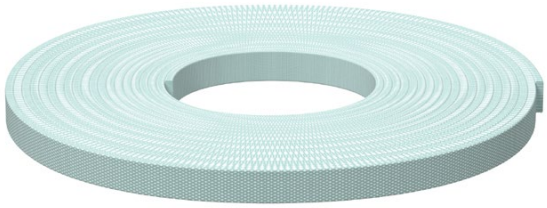

MFP PART NUMBER

PWS125x0250C4000-RL

SEAL TYPE | C/S | L2 | COMPOUND | ROLL

PROFILE

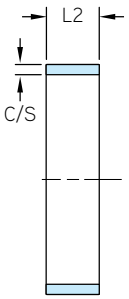

ROD APPLICATION

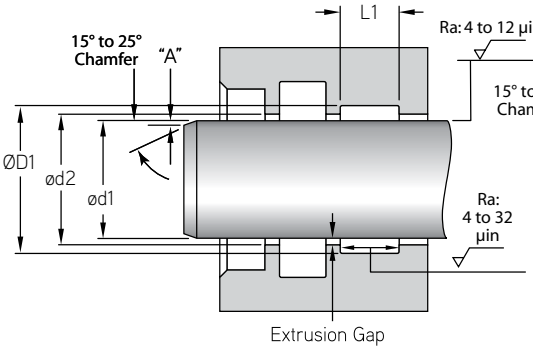

PISTON APPLICATION

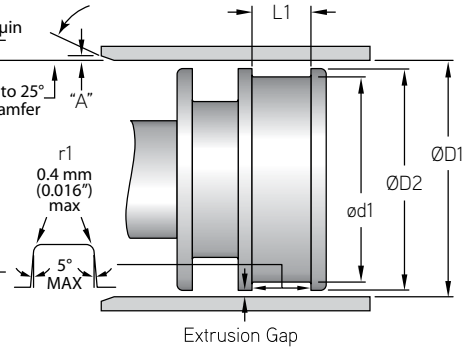

MFP PART NUMBER	ROD OR PISTON APPLICATION C/S	L2	L1	ROLL LENGTH
TOLERANCE	+.000/-.002	+.000/-.010	+.010/-.000	
PWS125X0250C4000-RL	0.125	0.250	0.260	32 FT
PWS125X0375C4000-RL	0.125	0.375	0.385	32 FT
PWS125X0500C4000-RL	0.125	0.500	0.510	32 FT
PWS125X0625C4000-RL	0.125	0.625	0.635	32 FT
PWS125X0750C4000-RL	0.125	0.750	0.760	32 FT
PWS125X1000C4000-RL	0.125	1.000	1.010	32 FT
PWS125X1250C4000-RL	0.125	1.250	1.260	32 FT
PWS125X1500C4000-RL	0.125	1.500	1.510	32 FT
PWS125X1750C4000-RL	0.125	1.750	1.760	32 FT
PWS125X2000C4000-RL	0.125	2.000	2.010	32 FT

Surface Finish: ISO 4287 & Chamfer Information on pages 7-9.
For ISO tolerance charts, refer to pages 12-13.

Compound information available on pages 20-37.

TWS - Tight Tolerance PTFE Wear Strip - T5100

A product of MFP Seals.

MFPSEALS®
www.mfpseals.com

TWS - T5100 TIGHT TOLERANCE PTFE WEAR STRIP

MFP Seals' proprietary Tight Tolerance T5100 PTFE Wear Strip is designed to eliminate scoring in hydraulic and pneumatic applications by preventing metal to metal contact. Our T5100 compound wear strip provides excellent light-duty, low friction performance. Sold by the roll.

See page 6 for guide ring cutting instructions.

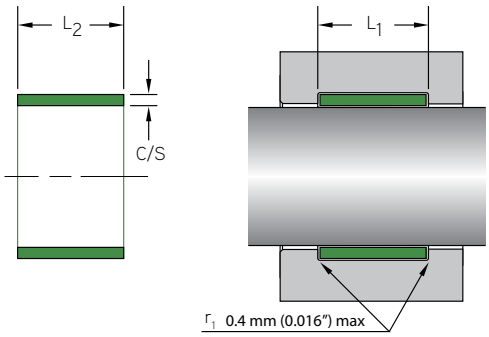

MFP PART NUMBER

TWS062x0250T5100-RL

SEAL TYPE | C/S | L2 | COMPOUND | ROLL

MFP PART NUMBER	ROD OR PISTON APPLICATION C/S	L2	L1	ROLL LENGTH
TOLERANCE	+.000/-.002	+.000/-.010	+.020/-.000	
TWS062X0250T5100-RL	0.063	0.250	0.260	115 FT
TWS062X0375T5100-RL	0.063	0.375	0.385	115 FT
TWS062X0500T5100-RL	0.063	0.500	0.510	115 FT
TWS062X0625T5100-RL	0.063	0.625	0.635	115 FT
TWS062X0750T5100-RL	0.063	0.750	0.760	115 FT
TWS062X1000T5100-RL	0.063	1.000	1.010	115 FT
TWS062X1250T5100-RL	0.063	1.250	1.260	115 FT
TWS062X1500T5100-RL	0.063	1.500	1.510	115 FT
TWS062X1750T5100-RL	0.063	1.750	1.760	115 FT
TWS062X2000T5100-RL	0.063	2.000	2.010	115 FT
TWS093X0250T5100-RL	0.094	0.250	0.260	66 FT
TWS093X0375T5100-RL	0.094	0.375	0.385	66 FT
TWS093X0500T5100-RL	0.094	0.500	0.510	66 FT
TWS093X0625T5100-RL	0.094	0.625	0.635	66 FT
TWS093X0750T5100-RL	0.094	0.750	0.765	66 FT
TWS093X1000T5100-RL	0.094	1.000	1.010	66 FT
TWS093X1250T5100-RL	0.094	1.250	1.260	66 FT
TWS093X1500T5100-RL	0.094	1.500	1.510	66 FT
TWS093X1750T5100-RL	0.094	1.750	1.760	66 FT
TWS093X2000T5100-RL	0.094	2.000	2.010	66 FT
TWS125X0250T5100-RL	0.125	0.250	0.260	52 FT
TWS125X0375T5100-RL	0.125	0.375	0.385	52 FT
TWS125X0500T5100-RL	0.125	0.500	0.510	52 FT
TWS125X0625T5100-RL	0.125	0.625	0.635	52 FT

Compound information available on pages 20-37.

Surface Finish: ISO 4287 & Chamfer Information on pages 7-9.
For ISO tolerance charts, refer to pages 12-13.

MFPSEALS®
www.mfpseals.com

TWS - Tight Tolerance PTFE Wear Strip - T5100

A product of MFP Seals.

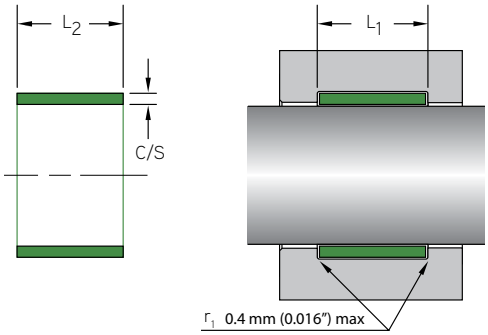

MFP PART NUMBER	ROD OR PISTON APPLICATION C/S	L2	L1	ROLL LENGTH
TOLERANCE	+.000/-.002	+.000/-.010	+.020/-.000	
TWS125X0750T5100-RL	0.125	0.750	0.760	52 FT
TWS125X1000T5100-RL	0.125	1.000	1.010	52 FT
TWS125X1250T5100-RL	0.125	1.250	1.260	52 FT
TWS125X1500T5100-RL	0.125	1.500	1.510	52 FT
TWS125X1750T5100-RL	0.125	1.750	1.760	52 FT
TWS125X2000T5100-RL	0.125	2.000	2.010	52 FT

PTFE BALL VALVE SEATS

MANUFACTURED FOR YOUR APPLICATION

MFP Seals produces PTFE Ball Valve Seats for applications where chemical compatibility is important, and where the tightest seal is required. PTFE Ball Valve Seats are chemically inert and 3A/FDA approved for use with food and sanitary service applications. Our T1000 (virgin PTFE) material has a low coefficient of friction, allowing valves to require less torque to operate. Capable of withstanding temperatures from -328°F up to +500°F, virgin PTFE can handle an extremely wide range of environments and is often used in high temperature applications.

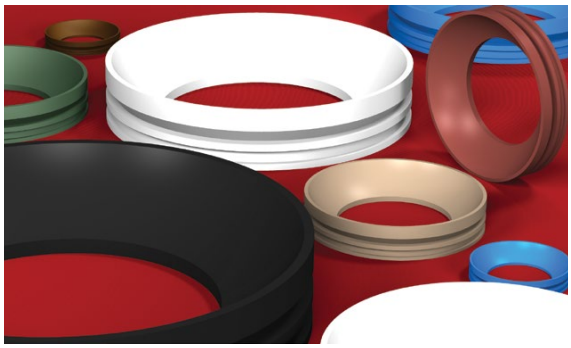

Because virgin PTFE has lower physical properties than other filled PTFE materials, it is not recommended for use in applications where fluids are abrasive or contaminated with small particles. Abrasives can wear down the material and cause leaks to occur.

While virgin PTFE Ball Valve Seats are white in color, they can also be made from blended materials, or engineered plastics such as PEEK, to meet the requirements of the application. Adding a filler will generally color the material to match the filler, but other custom colors can also be achieved. You must request custom colors prior to fabrication. Certain fillers or colors may affect the physical properties of the material. Please inform us if testing of a certain blend is required.

Give MFP Seals a call today, and we can work with you to suggest the best solution for your standard, or custom, Ball Valve Seat application.

RETURN TO AD INDEX

WR - Tight Tolerance Guide Ring - C4000

A product of MFP Seals.

MFPSEALS®
www.mfpseals.com

WR - C4000 TIGHT TOLERANCE GUIDE RINGS

MFP Seals' C4000 Tight Tolerance Guide Rings are made from synthetic fiber-reinforced polyester composites with PTFE micro-powder additions. These guide rings eliminate metal to metal contact and the consequent galling and scoring of cylinder bores. Guide rings are supplied butt cut or scarf cut, for easy installation.

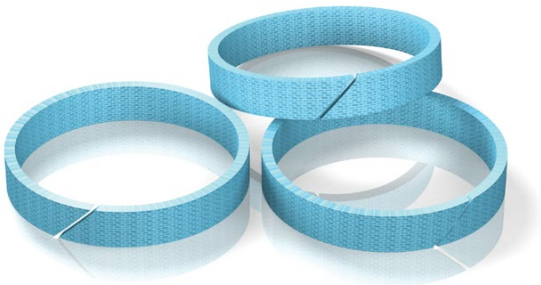

Composite Wear Rings are also available in C1000 and C2000.

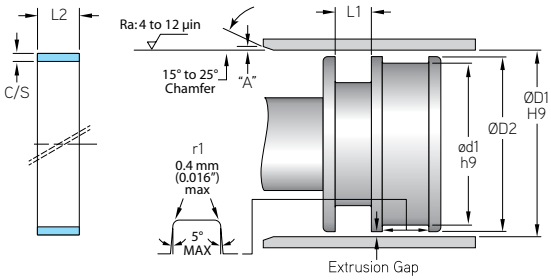

MFP PART NUMBER

WR01250X1000X125C4000-SC

SEAL TYPE | ØD1 | L2 | C/S | COMPOUND | SCARF CUT

Max. Velocity: 2.0 m/s (6.0 ft./s)

For sizes not listed please contact your MFP Seals' Sales Representative.

MFP PART NUMBER	ROD OR PISTON APPLICATION				
	ØD1	ød1	L1	L2	C/S
TOLERANCE	H9	h9	+.010/-.000		+.000/-.002
WR01250X250X125C4000-SC	1.250	0.999	0.260	0.250	0.125
WR01250X375X125C4000-SC	1.250	0.999	0.385	0.375	0.125
WR01250X1000X125C4000-SC	1.250	0.999	1.010	1.000	0.125
WR01500X250X125C4000-SC	1.500	1.249	0.260	0.250	0.125
WR01500X375X125C4000-SC	1.500	1.249	0.385	0.375	0.125
WR01500X500X125C4000-SC	1.500	1.249	0.510	0.500	0.125
WR01750X375X125C4000-SC	1.750	1.499	0.385	0.375	0.125
WR01750X500X125C4000-SC	1.750	1.499	0.510	0.500	0.125
WR01750X750X125C4000-SC	1.750	1.499	0.760	0.750	0.125
WR01750X1000X125C4000-SC	1.750	1.499	1.010	1.000	0.125
WR01875X375X125C4000-SC	1.875	1.624	0.385	0.375	0.125
WR01875X500X125C4000-SC	1.875	1.624	0.510	0.500	0.125
WR01875X750X125C4000-SC	1.875	1.624	0.760	0.750	0.125
WR02000X250X125C4000-SC	2.000	1.749	0.260	0.250	0.125
WR02000X375X125C4000-SC	2.000	1.749	0.385	0.375	0.125
WR02000X500X125C4000-SC	2.000	1.749	0.510	0.500	0.125
WR02000X625X125C4000-SC	2.000	1.749	0.635	0.625	0.125
WR02000X750X125C4000-SC	2.000	1.749	0.760	0.750	0.125
WR02125X375X125C4000-SC	2.125	1.874	0.385	0.375	0.125
WR02125X750X125C4000-SC	2.125	1.874	0.760	0.750	0.125
WR02250X250X125C4000-SC	2.250	1.999	0.260	0.250	0.125
WR02250X375X125C4000-SC	2.250	1.999	0.385	0.375	0.125

Compound information available on pages 20-37.

Surface Finish: ISO 4287 & Chamfer Information on pages 7-9.
For ISO tolerance charts, refer to pages 12-13.

MFPSEALS®
www.mfpseals.com

WR - Tight Tolerance Piston Guide Ring - C4000

A product of MFP Seals.

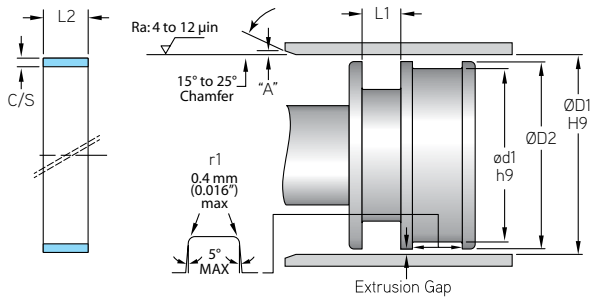

MFP PART NUMBER	ROD OR PISTON APPLICATION				
	ØD1	ød1	L1	L2	C/S
TOLERANCE	H9	h9	+.010/-.000		+.000/-.002
WR02250X500X125C4000-SC	2.250	1.999	0.510	0.500	0.125
WR02250X625X125C4000-SC	2.250	1.999	0.635	0.625	0.125
WR02250X750X125C4000-SC	2.250	1.999	0.760	0.750	0.125
WR02375X500X125C4000-SC	2.375	2.124	0.510	0.500	0.125
WR02375X750X125C4000-SC	2.375	2.124	0.760	0.750	0.125
WR02500X250X125C4000-SC	2.500	2.249	0.260	0.250	0.125
WR02500X375X125C4000-SC	2.500	2.249	0.385	0.375	0.125
WR02500X500X125C4000-SC	2.500	2.249	0.510	0.500	0.125
WR02500X625X125C4000-SC	2.500	2.249	0.635	0.625	0.125
WR02500X750X125C4000-SC	2.500	2.249	0.760	0.750	0.125
WR02500X1000X125C4000-SC	2.500	2.249	1.010	1.000	0.125
WR02750X250X125C4000-SC	2.750	2.499	0.260	0.250	0.125
WR02750X375X125C4000-SC	2.750	2.499	0.385	0.375	0.125
WR02750X500X125C4000-SC	2.750	2.499	0.510	0.500	0.125
WR02750X625X125C4000-SC	2.750	2.499	0.635	0.625	0.125
WR02750X750X125C4000-SC	2.750	2.499	0.760	0.750	0.125
WR02750X1000X125C4000-SC	2.750	2.499	1.010	1.000	0.125
WR02750X1500X125C4000-SC	2.750	2.499	1.510	1.500	0.125
WR02750X2000X125C4000-SC	2.750	2.499	2.010	2.000	0.125
WR02875X1000X125C4000-SC	2.875	2.624	1.010	1.000	0.125
WR03000X250X125C4000-SC	3.000	2.749	0.260	0.250	0.125
WR03000X375X125C4000-SC	3.000	2.749	0.385	0.375	0.125
WR03000X500X125C4000-SC	3.000	2.749	0.510	0.500	0.125
WR03000X625X125C4000-SC	3.000	2.749	0.635	0.625	0.125
WR03000X750X125C4000-SC	3.000	2.749	0.760	0.750	0.125
WR03000X1000X125C4000-SC	3.000	2.749	1.010	1.000	0.125
WR03125X500X125C4000-SC	3.125	2.874	0.510	0.500	0.125
WR03250X250X125C4000-SC	3.250	2.999	0.260	0.250	0.125
WR03250X312X125C4000-SC	3.250	2.999	0.322	0.312	0.125
WR03250X375X125C4000-SC	3.250	2.999	0.385	0.375	0.125
WR03250X500X125C4000-SC	3.250	2.999	0.510	0.500	0.125
WR03250X750X125C4000-SC	3.250	2.999	0.760	0.750	0.125
WR03250X1000X125C4000-SC	3.250	2.999	1.010	1.000	0.125
WR03250X1250X125C4000-SC	3.250	2.999	1.260	1.250	0.125
WR03250X1500X125C4000-SC	3.250	2.999	1.510	1.500	0.125
WR03250X2000X125C4000-SC	3.250	2.999	2.010	2.000	0.125
WR03375X750X125C4000-SC	3.375	3.124	0.760	0.750	0.125
WR03500X250X125C4000-SC	3.500	3.249	0.260	0.250	0.125

Surface Finish: ISO 4287 & Chamfer Information on pages 7-9.
For ISO tolerance charts, refer to pages 12-13.

Compound information available on pages 20-37.

WR - Tight Tolerance Piston Guide Ring - C4000

A product of MFP Seals.

MFPSEALS®
www.mfpseals.com

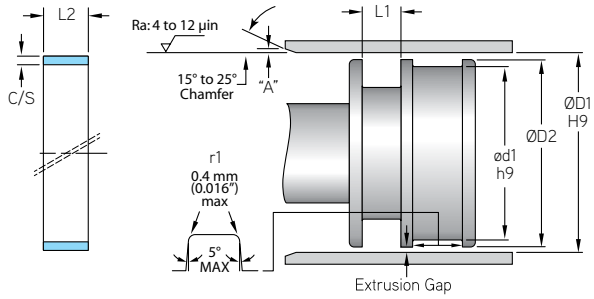

MFP PART NUMBER	ROD OR PISTON APPLICATION				
	ØD1	ød1	L1	L2	C/S
TOLERANCE	H9	h9	+.010/-.000		+.000/-.002
WR03500X375X125C4000-SC	3.500	3.249	0.385	0.375	0.125
WR03500X500X125C4000-SC	3.500	3.249	0.510	0.500	0.125
WR03500X625X125C4000-SC	3.500	3.249	0.635	0.625	0.125
WR03500X750X125C4000-SC	3.500	3.249	0.760	0.750	0.125
WR03500X1000X125C4000-SC	3.500	3.249	1.010	1.000	0.125
WR03500X1500X125C4000-SC	3.500	3.249	1.510	1.500	0.125
WR03625X500X125C4000-SC	3.625	3.374	0.510	0.500	0.125
WR03625X1000X125C4000-SC	3.625	3.374	1.010	1.000	0.125
WR03750X250X125C4000-SC	3.750	3.499	0.260	0.250	0.125
WR03750X375X125C4000-SC	3.750	3.499	0.385	0.375	0.125
WR03750X500X125C4000-SC	3.750	3.499	0.510	0.500	0.125
WR03750X625X125C4000-SC	3.750	3.499	0.635	0.625	0.125
WR03750X750X125C4000-SC	3.750	3.499	0.760	0.750	0.125
WR03750X1000X125C4000-SC	3.750	3.499	1.010	1.000	0.125
WR03750X1250X125C4000-SC	3.750	3.499	1.260	1.250	0.125
WR04000X250X125C4000-SC	4.000	3.749	0.260	0.250	0.125
WR04000X375X125C4000-SC	4.000	3.749	0.385	0.375	0.125
WR04000X500X125C4000-SC	4.000	3.749	0.510	0.500	0.125
WR04000X625X125C4000-SC	4.000	3.749	0.635	0.625	0.125
WR04000X750X125C4000-SC	4.000	3.749	0.760	0.750	0.125
WR04000X1000X125C4000-SC	4.000	3.749	1.010	1.000	0.125
WR04000X1250X125C4000-SC	4.000	3.749	1.260	1.250	0.125
WR04000X1500X125C4000-SC	4.000	3.749	1.510	1.500	0.125
WR04250X375X125C4000-SC	4.250	3.999	0.385	0.375	0.125
WR04250X500X125C4000-SC	4.250	3.999	0.510	0.500	0.125
WR04250X625X125C4000-SC	4.250	3.999	0.635	0.625	0.125
WR04250X750X125C4000-SC	4.250	3.999	0.760	0.750	0.125
WR04250X1000X125C4000-SC	4.250	3.999	1.010	1.000	0.125
WR04250X1250X125C4000-SC	4.250	3.999	1.260	1.250	0.125
WR04250X1500X125C4000-SC	4.250	3.999	1.510	1.500	0.125
WR04500X375X125C4000-SC	4.500	4.249	0.385	0.375	0.125
WR04500X500X125C4000-SC	4.500	4.249	0.510	0.500	0.125
WR04500X625X125C4000-SC	4.500	4.249	0.635	0.625	0.125
WR04500X750X125C4000-SC	4.500	4.249	0.760	0.750	0.125
WR04500X1000X125C4000-SC	4.500	4.249	1.010	1.000	0.125
WR04500X1500X125C4000-SC	4.500	4.249	1.510	1.500	0.125
WR04750X375X125C4000-SC	4.750	4.499	0.385	0.375	0.125
WR04750X500X125C4000-SC	4.750	4.499	0.510	0.500	0.125

Compound information available on pages 20-37.

Surface Finish: ISO 4287 & Chamfer Information on pages 7-9.
For ISO tolerance charts, refer to pages 12-13.

MFPSEALS®
www.mfpseals.com

WR - Tight Tolerance Piston Guide Ring - C4000

A product of MFP Seals.

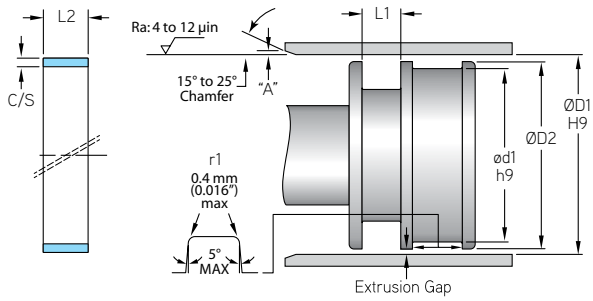

MFP PART NUMBER	ROD OR PISTON APPLICATION				
	ØD1	ød1	L1	L2	C/S
TOLERANCE	H9	h9	+.010/-.000		+.000/-.002
WR04750X750X125C4000-SC	4.750	4.499	0.760	0.750	0.125
WR04750X1000X125C4000-SC	4.750	4.499	1.010	1.000	0.125
WR04750X1250X125C4000-SC	4.750	4.499	1.260	1.250	0.125
WR04750X1500X125C4000-SC	4.750	4.499	1.510	1.500	0.125
WR04750X2000X125C4000-SC	4.750	4.499	2.010	2.000	0.125
WR05000X250X125C4000-SC	5.000	4.749	0.260	0.250	0.125
WR05000X375X125C4000-SC	5.000	4.749	0.385	0.375	0.125
WR05000X500X125C4000-SC	5.000	4.749	0.510	0.500	0.125
WR05000X625X125C4000-SC	5.000	4.749	0.635	0.625	0.125
WR05000X750X125C4000-SC	5.000	4.749	0.760	0.750	0.125
WR05000X1000X125C4000-SC	5.000	4.749	1.010	1.000	0.125
WR05000X1250X125C4000-SC	5.000	4.749	1.260	1.250	0.125
WR05000X1750X125C4000-SC	5.000	4.749	1.760	1.750	0.125
WR05250X500X125C4000-SC	5.250	4.999	0.510	0.500	0.125
WR05250X625X125C4000-SC	5.250	4.999	0.635	0.625	0.125
WR05250X750X125C4000-SC	5.250	4.999	0.760	0.750	0.125
WR05250X1000X125C4000-SC	5.250	4.999	1.010	1.000	0.125
WR05250X1250X125C4000-SC	5.250	4.999	1.260	1.250	0.125
WR05250X2000X125C4000-SC	5.250	4.999	2.010	2.000	0.125
WR05500X375X125C4000-SC	5.500	5.249	0.385	0.375	0.125
WR05500X500X125C4000-SC	5.500	5.249	0.510	0.500	0.125
WR05500X625X125C4000-SC	5.500	5.249	0.635	0.625	0.125
WR05500X750X125C4000-SC	5.500	5.249	0.760	0.750	0.125
WR05500X1000X125C4000-SC	5.500	5.249	1.010	1.000	0.125
WR05500X1250X125C4000-SC	5.500	5.249	1.260	1.250	0.125
WR05750X250X125C4000-SC	5.750	5.499	0.260	0.250	0.125
WR05750X625X125C4000-SC	5.750	5.499	0.635	0.625	0.125
WR05750X750X125C4000-SC	5.750	5.499	0.760	0.750	0.125
WR05750X1000X125C4000-SC	5.750	5.499	1.010	1.000	0.125
WR05750X1500X125C4000-SC	5.750	5.499	1.510	1.500	0.125
WR06000X250X125C4000-SC	6.000	5.749	0.260	0.250	0.125
WR06000X500X125C4000-SC	6.000	5.749	0.510	0.500	0.125
WR06000X625X125C4000-SC	6.000	5.749	0.635	0.625	0.125
WR06000X750X125C4000-SC	6.000	5.749	0.760	0.750	0.125
WR06000X875X125C4000-SC	6.000	5.749	0.885	0.875	0.125
WR06000X1000X125C4000-SC	6.000	5.749	1.010	1.000	0.125
WR06000X1250X125C4000-SC	6.000	5.749	1.260	1.250	0.125
WR06000X1500X125C4000-SC	6.000	5.749	1.510	1.500	0.125

Surface Finish: ISO 4287 & Chamfer Information on pages 7-9.
For ISO tolerance charts, refer to pages 12-13.

Compound information available on pages 20-37.

WR - Tight Tolerance Piston Guide Ring - C4000

A product of MFP Seals.

MFPSEALS®
www.mfpseals.com

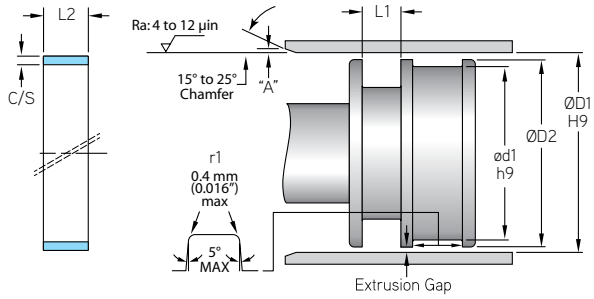

MFP PART NUMBER	ROD OR PISTON APPLICATION				
	ØD1	ød1	L1	L2	C/S
TOLERANCE	H9	h9	+.010/-.000		+.000/-.002
WR06000X1750X125C4000-SC	6.000	5.749	1.760	1.750	0.125
WR06000X2000X125C4000-SC	6.000	5.749	2.010	2.000	0.125
WR06250X500X125C4000-SC	6.250	5.999	0.510	0.500	0.125
WR06250X625X125C4000-SC	6.250	5.999	0.635	0.625	0.125
WR06250X750X125C4000-SC	6.250	5.999	0.760	0.750	0.125
WR06250X1000X125C4000-SC	6.250	5.999	1.010	1.000	0.125
WR06250X1500X125C4000-SC	6.250	5.999	1.510	1.500	0.125
WR06250X2000X125C4000-SC	6.250	5.999	2.010	2.000	0.125
WR06500X500X125C4000-SC	6.500	6.249	0.510	0.500	0.125
WR06500X625X125C4000-SC	6.500	6.249	0.635	0.625	0.125
WR06500X750X125C4000-SC	6.500	6.249	0.760	0.750	0.125
WR06500X1000X125C4000-SC	6.500	6.249	1.010	1.000	0.125
WR06500X1250X125C4000-SC	6.500	6.249	1.260	1.250	0.125
WR06500X1500X125C4000-SC	6.500	6.249	1.510	1.500	0.125
WR06500X2000X125C4000-SC	6.500	6.249	2.010	2.000	0.125
WR06750X1000X125C4000-SC	6.750	6.499	1.010	1.000	0.125
WR06750X1500X125C4000-SC	6.750	6.499	1.510	1.500	0.125
WR07000X500X125C4000-SC	7.000	6.749	0.510	0.500	0.125
WR07000X625X125C4000-SC	7.000	6.749	0.635	0.625	0.125
WR07000X750X125C4000-SC	7.000	6.749	0.760	0.750	0.125
WR07000X1000X125C4000-SC	7.000	6.749	1.010	1.000	0.125
WR07000X1500X125C4000-SC	7.000	6.749	1.510	1.500	0.125
WR07000X1750X125C4000-SC	7.000	6.749	1.760	1.750	0.125
WR07000X2000X125C4000-SC	7.000	6.749	2.010	2.000	0.125
WR07250X500X125C4000-SC	7.250	6.999	0.510	0.500	0.125
WR07250X750X125C4000-SC	7.250	6.999	0.760	0.750	0.125
WR07250X1000X125C4000-SC	7.250	6.999	1.010	1.000	0.125
WR07250X2000X125C4000-SC	7.250	6.999	2.010	2.000	0.125
WR07500X500X125C4000-SC	7.500	7.249	0.510	0.500	0.125
WR07500X625X125C4000-SC	7.500	7.249	0.635	0.625	0.125
WR07500X750X125C4000-SC	7.500	7.249	0.760	0.750	0.125
WR07500X1000X125C4000-SC	7.500	7.249	1.010	1.000	0.125
WR07500X1500X125C4000-SC	7.500	7.249	1.510	1.500	0.125
WR07500X2000X125C4000-SC	7.500	7.249	2.010	2.000	0.125
WR07750X500X125C4000-SC	7.750	7.499	0.510	0.500	0.125
WR07750X1000X125C4000-SC	7.750	7.499	1.010	1.000	0.125
WR08000X500X125C4000-SC	8.000	7.749	0.510	0.500	0.125
WR08000X625X125C4000-SC	8.000	7.749	0.635	0.625	0.125

Compound information available on pages 20-37.

Surface Finish: ISO 4287 & Chamfer Information on pages 7-9.
For ISO tolerance charts, refer to pages 12-13.

MFPSEALS®
www.mfpseals.com

WR - Tight Tolerance Piston Guide Ring - C4000

A product of MFP Seals.

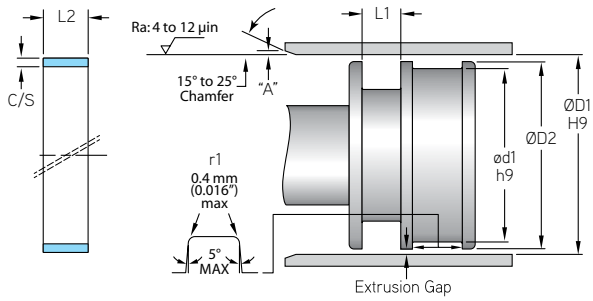

MFP PART NUMBER	ROD OR PISTON APPLICATION				
	ØD1	ød1	L1	L2	C/S
TOLERANCE	H9	h9	+.010/-.000		+.000/-.002
WR08000X750X125C4000-SC	8.000	7.749	0.760	0.750	0.125
WR08000X875X125C4000-SC	8.000	7.749	0.885	0.875	0.125
WR08000X1000X125C4000-SC	8.000	7.749	1.010	1.000	0.125
WR08000X1250X125C4000-SC	8.000	7.749	1.260	1.250	0.125
WR08000X2000X125C4000-SC	8.000	7.749	2.010	2.000	0.125
WR08250X1000X125C4000-SC	8.250	7.999	1.010	1.000	0.125
WR08250X1250X125C4000-SC	8.250	7.999	1.260	1.250	0.125
WR08250X1500X125C4000-SC	8.250	7.999	1.510	1.500	0.125
WR08250X1750X125C4000-SC	8.250	7.999	1.760	1.750	0.125
WR08500X500X125C4000-SC	8.500	8.249	0.510	0.500	0.125
WR08500X625X125C4000-SC	8.500	8.249	0.635	0.625	0.125
WR08500X1000X125C4000-SC	8.500	8.249	1.010	1.000	0.125
WR08750X1000X125C4000-SC	8.750	8.499	1.010	1.000	0.125
WR09000X1000X125C4000-SC	9.000	8.749	1.010	1.000	0.125
WR09000X1500X125C4000-SC	9.000	8.749	1.510	1.500	0.125
WR09250X1500X125C4000-SC	9.250	8.999	1.510	1.500	0.125
WR09500X625X125C4000-SC	9.500	9.249	0.635	0.625	0.125
WR09500X1000X125C4000-SC	9.500	9.249	1.010	1.000	0.125
WR09750X500X125C4000-SC	9.750	9.499	0.510	0.500	0.125
WR09750X1000X125C4000-SC	9.750	9.499	1.010	1.000	0.125
WR10000X500X125C4000-SC	10.000	9.749	0.510	0.500	0.125
WR10000X1000X125C4000-SC	10.000	9.749	1.010	1.000	0.125
WR10000X1500X125C4000-SC	10.000	9.749	1.510	1.500	0.125
WR10250X1000X125C4000-SC	10.250	9.999	1.010	1.000	0.125
WR10500X1000X125C4000-SC	10.500	10.249	1.010	1.000	0.125
WR11000X1000X125C4000-SC	11.000	10.749	1.010	1.000	0.125
WR12000X1000X125C4000-SC	12.000	11.749	1.010	1.000	0.125

Surface Finish: ISO 4287 & Chamfer Information on pages 7-9.
For ISO tolerance charts, refer to pages 12-13.

Compound information available on pages 20-37.

WR - Net Molded Guide Ring - M1005

A product of MFP Seals.

MFPSEALS
www.mfpseals.com

WR - M1005 NET MOLDED GUIDE RINGS

MFP Seals' M1005 Net Molded Guide Rings are made from glass-reinforced nylon. These guide rings eliminate metal to metal contact and the consequent galling and scoring of cylinder bores. Guide rings are supplied available butt cut, for easy installation.

For sizes not listed please contact your MFP Seals' Sales Representative.

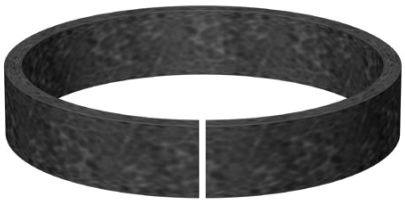

MFP PART NUMBER

WR01250X250M1005-NM

SEAL TYPE | ØD1 | L2 | COMPOUND | NET MOLD

PROFILE

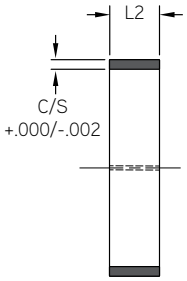

ROD APPLICATION

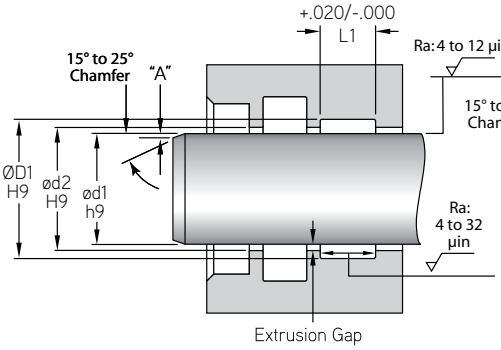

PISTON APPLICATION

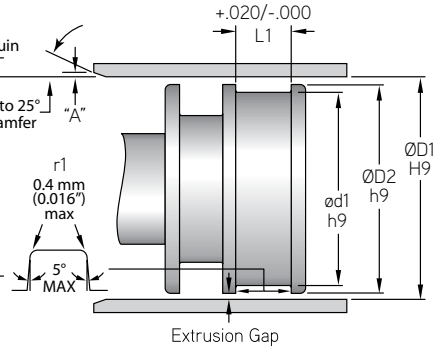

Max. Velocity: 2.2 m/s (7.2 ft./s)

MFP PART NUMBER	ROD OR PISTON APPLICATION						
	ØD1	ød2	ød1	ØD2	L1	L2	C/S
TOLERANCE	H9	H9	h9	h9	+.020/-.000		+.000/-.002
WR01250X250M1005-NM	1.250	1.233	1.000	1.017	0.260	0.250	0.125
WR01250X375M1005-NM	1.250	1.233	1.000	1.017	0.385	0.375	0.125
WR01250X1000M1005-NM	1.250	1.233	1.000	1.017	1.010	1.000	0.125
WR01500X250M1005-NM	1.500	1.483	1.250	1.267	0.260	0.250	0.125
WR01500X375M1005-NM	1.500	1.483	1.250	1.267	0.385	0.375	0.125
WR01500X500M1005-NM	1.500	1.483	1.250	1.267	0.510	0.500	0.125
WR01750X1000M1005-NM	1.750	1.733	1.500	1.517	1.010	1.000	0.125
WR01750X375M1005-NM	1.750	1.733	1.500	1.517	0.385	0.375	0.125
WR01750X500M1005-NM	1.750	1.733	1.500	1.517	0.510	0.500	0.125
WR01750X750M1005-NM	1.750	1.733	1.500	1.517	0.760	0.750	0.125
WR01875X375M1005-NM	1.875	1.858	1.625	1.642	0.385	0.375	0.125
WR01875X500M1005-NM	1.875	1.858	1.625	1.642	0.510	0.500	0.125
WR01875X750M1005-NM	1.875	1.858	1.625	1.642	0.760	0.750	0.125
WR02000X250M1005-NM	2.000	1.983	1.750	1.767	0.260	0.250	0.125
WR02000X375M1005-NM	2.000	1.983	1.750	1.767	0.385	0.375	0.125
WR02000X500M1005-NM	2.000	1.983	1.750	1.767	0.510	0.500	0.125
WR02000X625M1005-NM	2.000	1.983	1.750	1.767	0.635	0.625	0.125
WR02000X750M1005-NM	2.000	1.983	1.750	1.767	0.760	0.750	0.125

Compound information available on pages 20-37.

Surface Finish: ISO 4287 & Chamfer Information on pages 7-9.
For ISO tolerance charts, refer to pages 12-13.

MFPSEALS®
www.mfpseals.com

WR - Net Molded Guide Ring - M1005

A product of MFP Seals.

PROFILE

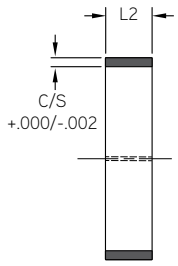

ROD APPLICATION

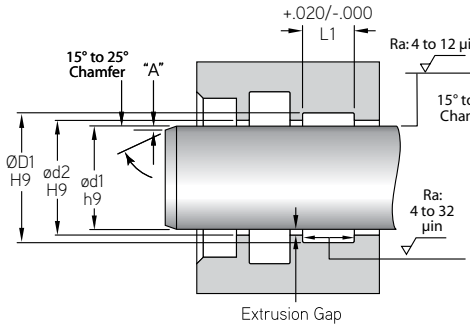

PISTON APPLICATION

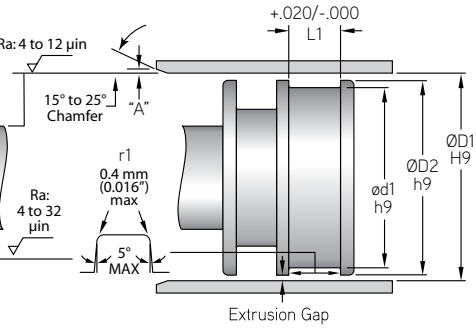

MFP PART NUMBER	ROD OR PISTON APPLICATION						
	ØD1	ød2	ød1	ØD2	L1	L2	C/S
TOLERANCE	H9	H9	h9	h9	+.020/-.000		+.000/-.002
WR02125X375M1005-NM	2.125	2.108	1.875	1.892	0.385	0.375	0.125
WR02125X750M1005-NM	2.125	2.108	1.875	1.892	0.760	0.750	0.125
WR02250X250M1005-NM	2.250	2.233	2.000	2.017	0.260	0.250	0.125
WR02250X375M1005-NM	2.250	2.233	2.000	2.017	0.385	0.375	0.125
WR02250X500M1005-NM	2.250	2.233	2.000	2.017	0.510	0.500	0.125
WR02250X625M1005-NM	2.250	2.233	2.000	2.017	0.635	0.625	0.125
WR02250X750M1005-NM	2.250	2.233	2.000	2.017	0.760	0.750	0.125
WR02375X500M1005-NM	2.375	2.358	2.125	2.142	0.510	0.500	0.125
WR02375X750M1005-NM	2.375	2.358	2.125	2.142	0.760	0.750	0.125
WR02500X250M1005-NM	2.500	2.483	2.250	2.267	0.260	0.250	0.125
WR02500X375M1005-NM	2.500	2.483	2.250	2.267	0.385	0.375	0.125
WR02500X500M1005-NM	2.500	2.483	2.250	2.267	0.510	0.500	0.125
WR02500X625M1005-NM	2.500	2.483	2.250	2.267	0.635	0.625	0.125
WR02500X750M1005-NM	2.500	2.483	2.250	2.267	0.760	0.750	0.125
WR02500X1000M1005-NM	2.500	2.483	2.250	2.267	1.010	1.000	0.125
WR02750X250M1005-NM	2.750	2.733	2.500	2.517	0.260	0.250	0.125
WR02750X375M1005-NM	2.750	2.733	2.500	2.517	0.385	0.375	0.125
WR02750X500M1005-NM	2.750	2.733	2.500	2.517	0.510	0.500	0.125
WR02750X625M1005-NM	2.750	2.733	2.500	2.517	0.635	0.625	0.125
WR02750X750M1005-NM	2.750	2.733	2.500	2.517	0.760	0.750	0.125
WR02750X1000M1005-NM	2.750	2.733	2.500	2.517	1.010	1.000	0.125
WR02875X1000M1005-NM	2.875	2.858	2.625	2.642	1.010	1.000	0.125
WR03000X250M1005-NM	3.000	2.983	2.750	2.767	0.260	0.250	0.125
WR03000X375M1005-NM	3.000	2.983	2.750	2.767	0.385	0.375	0.125
WR03000X500M1005-NM	3.000	2.983	2.750	2.767	0.510	0.500	0.125
WR03000X625M1005-NM	3.000	2.983	2.750	2.767	0.635	0.625	0.125
WR03000X750M1005-NM	3.000	2.983	2.750	2.767	0.760	0.750	0.125
WR03000X1000M1005-NM	3.000	2.983	2.750	2.767	1.010	1.000	0.125
WR03125X500M1005-NM	3.125	3.108	2.875	2.892	0.510	0.500	0.125
WR03250X250M1005-NM	3.250	3.233	3.000	3.017	0.260	0.250	0.125
WR03250X312M1005-NM	3.250	3.233	3.000	3.017	0.322	0.312	0.125
WR03250X375M1005-NM	3.250	3.233	3.000	3.017	0.385	0.375	0.125
WR03250X500M1005-NM	3.250	3.233	3.000	3.017	0.510	0.500	0.125
WR03250X750M1005-NM	3.250	3.233	3.000	3.017	0.760	0.750	0.125

Surface Finish: ISO 4287 & Chamfer Information on pages 7-9.
For ISO tolerance charts, refer to pages 12-13.

Compound information available on pages 20-37.

WR - Net Molded Guide Ring - M1005

A product of MFP Seals.

MFPSEALS®
www.mfpseals.com

PROFILE

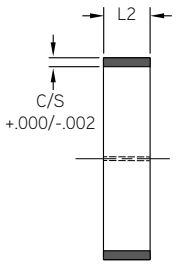

ROD APPLICATION

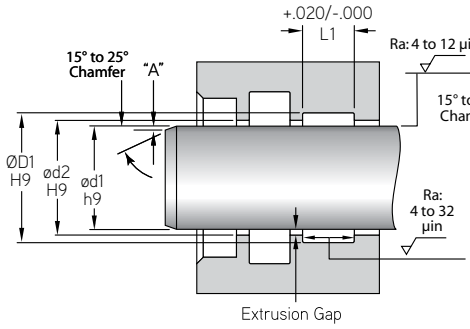

PISTON APPLICATION

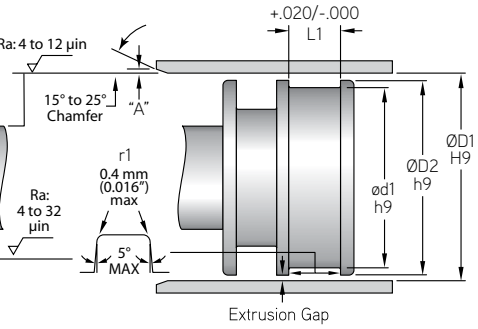

	ROD OR PISTON APPLICATION						
MFP PART NUMBER	ØD1	ød2	ød1	ØD2	L1	L2	C/S
TOLERANCE	H9	H9	h9	h9	+.020/-.000		+.000/-.002
WR03250X1000M1005-NM	3.250	3.233	3.000	3.017	1.010	1.000	0.125
WR03375X750M1005-NM	3.375	3.358	3.125	3.142	0.760	0.750	0.125
WR03500X250M1005-NM	3.500	3.483	3.250	3.267	0.260	0.250	0.125
WR03500X375M1005-NM	3.500	3.483	3.250	3.267	0.385	0.375	0.125
WR03500X500M1005-NM	3.500	3.483	3.250	3.267	0.510	0.500	0.125
WR03500X625M1005-NM	3.500	3.483	3.250	3.267	0.635	0.625	0.125
WR03500X750M1005-NM	3.500	3.483	3.250	3.267	0.760	0.750	0.125
WR03500X1000M1005-NM	3.500	3.483	3.250	3.267	1.010	1.000	0.125
WR03625X500M1005-NM	3.625	3.608	3.375	3.392	0.510	0.500	0.125
WR03625X1000M1005-NM	3.625	3.608	3.375	3.392	1.010	1.000	0.125
WR03750X250M1005-NM	3.750	3.733	3.500	3.517	0.260	0.250	0.125
WR03750X375M1005-NM	3.750	3.733	3.500	3.517	0.385	0.375	0.125
WR03750X500M1005-NM	3.750	3.733	3.500	3.517	0.510	0.500	0.125
WR03750X625M1005-NM	3.750	3.733	3.500	3.517	0.635	0.625	0.125
WR03750X750M1005-NM	3.750	3.733	3.500	3.517	0.760	0.750	0.125
WR03750X1000M1005-NM	3.750	3.733	3.500	3.517	1.010	1.000	0.125
WR04000X250M1005-NM	4.000	3.983	3.750	3.767	0.260	0.250	0.125
WR04000X375M1005-NM	4.000	3.983	3.750	3.767	0.385	0.375	0.125
WR04000X500M1005-NM	4.000	3.983	3.750	3.767	0.510	0.500	0.125
WR04000X625M1005-NM	4.000	3.983	3.750	3.767	0.635	0.625	0.125
WR04000X750M1005-NM	4.000	3.983	3.750	3.767	0.760	0.750	0.125
WR04000X1000M1005-NM	4.000	3.983	3.750	3.767	1.010	1.000	0.125
WR04250X375M1005-NM	4.250	4.233	4.000	4.017	0.385	0.375	0.125
WR04250X500M1005-NM	4.250	4.233	4.000	4.017	0.510	0.500	0.125
WR04250X625M1005-NM	4.250	4.233	4.000	4.017	0.635	0.625	0.125
WR04250X750M1005-NM	4.250	4.233	4.000	4.017	0.760	0.750	0.125
WR04250X1000M1005-NM	4.250	4.233	4.000	4.017	1.010	1.000	0.125
WR04500X375M1005-NM	4.500	4.483	4.250	4.267	0.385	0.375	0.125
WR04500X500M1005-NM	4.500	4.483	4.250	4.267	0.510	0.500	0.125
WR04500X625M1005-NM	4.500	4.483	4.250	4.267	0.635	0.625	0.125
WR04500X750M1005-NM	4.500	4.483	4.250	4.267	0.760	0.750	0.125
WR04500X1000M1005-NM	4.500	4.483	4.250	4.267	1.010	1.000	0.125
WR04750X375M1005-NM	4.750	4.733	4.500	4.517	0.385	0.375	0.125
WR04750X500M1005-NM	4.750	4.733	4.500	4.517	0.510	0.500	0.125

Compound information available on pages 20-37.

Surface Finish: ISO 4287 & Chamfer Information on pages 7-9.
For ISO tolerance charts, refer to pages 12-13.

MFPSEALS®
www.mfpseals.com

WR - Net Molded Guide Ring - M1005

A product of MFP Seals.

PROFILE

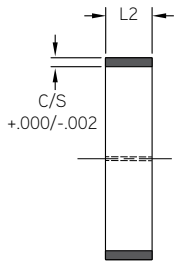

ROD APPLICATION

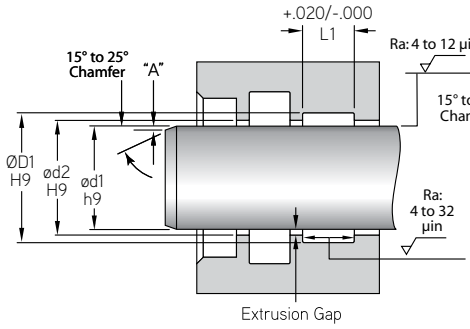

PISTON APPLICATION

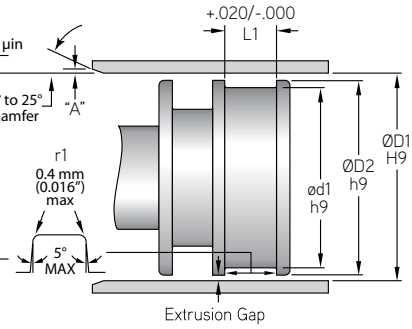

	ROD OR PISTON APPLICATION						
MFP PART NUMBER	**ØD1**	**ød2**	**ød1**	**ØD2**	**L1**	**L2**	**C/S**
TOLERANCE	H9	H9	h9	h9	+.020/-.000		+.000/-.002
WR04750X750M1005-NM	4.750	4.733	4.500	4.517	0.760	0.750	0.125
WR04750X1000M1005-NM	4.750	4.733	4.500	4.517	1.010	1.000	0.125
WR05000X250M1005-NM	5.000	4.982	4.750	4.768	0.260	0.250	0.125
WR05000X375M1005-NM	5.000	4.982	4.750	4.768	0.385	0.375	0.125
WR05000X500M1005-NM	5.000	4.982	4.750	4.768	0.510	0.500	0.125
WR05000X625M1005-NM	5.000	4.982	4.750	4.768	0.635	0.625	0.125
WR05000X750M1005-NM	5.000	4.982	4.750	4.768	0.760	0.750	0.125
WR05000X1000M1005-NM	5.000	4.982	4.750	4.768	1.010	1.000	0.125
WR05250X500M1005-NM	5.250	5.232	5.000	5.018	0.510	0.500	0.125
WR05250X625M1005-NM	5.250	5.232	5.000	5.018	0.635	0.625	0.125
WR05250X750M1005-NM	5.250	5.232	5.000	5.018	0.760	0.750	0.125
WR05250X1000M1005-NM	5.250	5.232	5.000	5.018	1.010	1.000	0.125
WR05500X375M1005-NM	5.500	5.482	5.250	5.268	0.385	0.375	0.125
WR05500X500M1005-NM	5.500	5.482	5.250	5.268	0.510	0.500	0.125
WR05500X625M1005-NM	5.500	5.482	5.250	5.268	0.635	0.625	0.125
WR05500X750M1005-NM	5.500	5.482	5.250	5.268	0.760	0.750	0.125
WR05500X1000M1005-NM	5.500	5.482	5.250	5.268	1.010	1.000	0.125
WR05750X250M1005-NM	5.750	5.732	5.500	5.518	0.260	0.250	0.125
WR05750X500M1005-NM	5.750	5.732	5.500	5.518	0.510	0.500	0.125
WR05750X625M1005-NM	5.750	5.732	5.500	5.518	0.635	0.625	0.125
WR05750X750M1005-NM	5.750	5.732	5.500	5.518	0.760	0.750	0.125
WR05750X1000M1005-NM	5.750	5.732	5.500	5.518	1.010	1.000	0.125
WR06000X250M1005-NM	6.000	5.980	5.750	5.770	0.260	0.250	0.125
WR06000X500M1005-NM	6.000	5.980	5.750	5.770	0.510	0.500	0.125
WR06000X625M1005-NM	6.000	5.980	5.750	5.770	0.635	0.625	0.125
WR06000X750M1005-NM	6.000	5.980	5.750	5.770	0.760	0.750	0.125
WR06000X875M1005-NM	6.000	5.980	5.750	5.770	0.885	0.875	0.125
WR06000X1000M1005-NM	6.000	5.980	5.750	5.770	1.010	1.000	0.125

Surface Finish: ISO 4287 & Chamfer Information on pages 7-9.
For ISO tolerance charts, refer to pages 12-13.

Compound information
available on pages 20-37.

WR - Tight Tolerance Piston Guide Ring - M1005

A product of MFP Seals.

MFPSEALS®
www.mfpseals.com

WR - M1005 TIGHT TOLERANCE GUIDE RINGS

MFP Seals' M1005 Tight Tolerance Guide Rings are made from glass-reinforced nylon. These guide rings eliminate metal to metal contact and the consequent galling and scoring of cylinder bores. Guide rings are supplied scarf cut, for easy installation. They are also available butt cut or step cut, upon request.

For sizes not listed please contact your MFP Seals' Sales Representative.

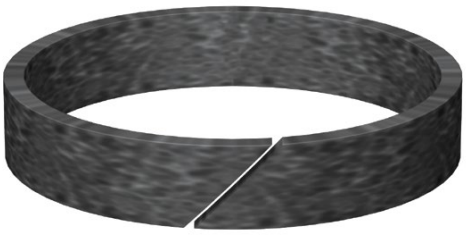

MFP PART NUMBER

WR01125X375X125M1005-SC

SEAL TYPE | ØD1 | L2 | CROSS SECTION | COMPOUND | CUT

PROFILE

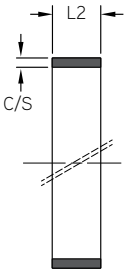

ROD APPLICATION

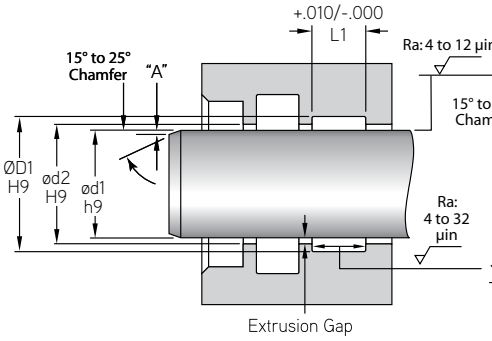

PISTON APPLICATION

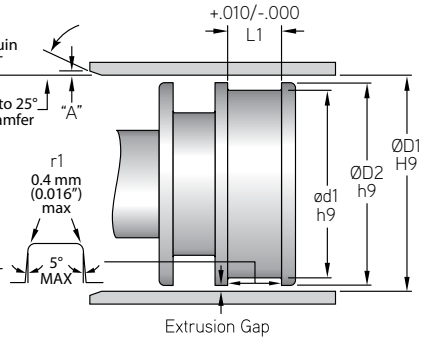

Max. Velocity: 2.2 m/s (7.2 ft./s)

MFP PART NUMBER	ROD OR PISTON APPLICATION					
	ØD1	ød1	ØD2	L1	L2	C/S
TOLERANCE	H9	h9	h9	+.010/-.000		+.000/-.002
WR01125X375X125M1005-SC	1.125	0.874	1.108	0.385	0.375	0.125
WR01250X250X125M1005-SC	1.250	0.999	1.233	0.260	0.250	0.125
WR01250X500X125M1005-SC	1.250	0.999	1.233	0.510	0.500	0.125
WR01250X750X125M1005-SC	1.250	0.999	1.233	0.760	0.750	0.125
WR01500X250X125M1005-SC	1.500	1.249	1.483	0.260	0.250	0.125
WR01500X375X125M1005-SC	1.500	1.249	1.483	0.385	0.375	0.125
WR01500X500X125M1005-SC	1.500	1.249	1.483	0.510	0.500	0.125
WR01500X750X125M1005-SC	1.500	1.249	1.483	0.760	0.750	0.125
WR01750X375X125M1005-SC	1.750	1.499	1.733	0.385	0.375	0.125
WR01750X500X125M1005-SC	1.750	1.499	1.733	0.510	0.500	0.125
WR01750X750X125M1005-SC	1.750	1.499	1.733	0.760	0.750	0.125
WR01750X1000X125M1005-SC	1.750	1.499	1.733	1.010	1.000	0.125
WR01875X500X125M1005-SC	1.875	1.624	1.858	0.510	0.500	0.125
WR01875X750X125M1005-SC	1.875	1.624	1.858	0.760	0.750	0.125
WR02000X250X125M1005-SC	2.000	1.749	1.983	0.260	0.250	0.125
WR02000X375X125M1005-SC	2.000	1.749	1.983	0.385	0.375	0.125
WR02000X500X125M1005-SC	2.000	1.749	1.983	0.510	0.500	0.125
WR02000X625X125M1005-SC	2.000	1.749	1.983	0.635	0.625	0.125

Compound information available on pages 20-37.

Surface Finish: ISO 4287 & Chamfer Information on pages 7-9.
For ISO tolerance charts, refer to pages 12-13.

MFPSEALS®
www.mfpseals.com

WR - Tight Tolerance Piston Guide Ring - M1005

A product of MFP Seals.

PROFILE

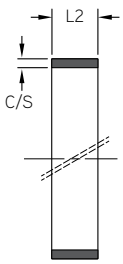

ROD APPLICATION

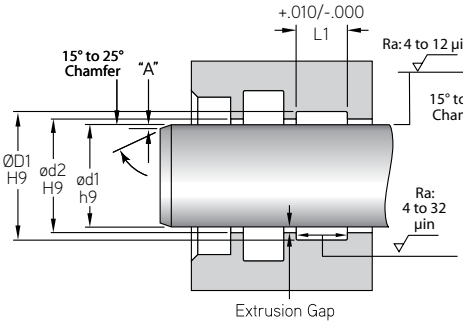

PISTON APPLICATION

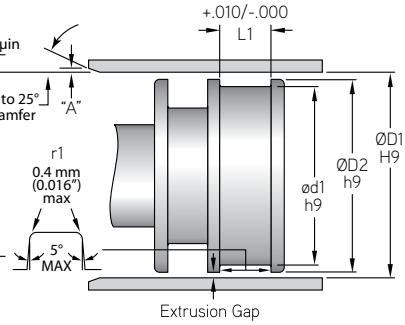

MFP PART NUMBER	PISTON APPLICATION ØD1	ød1	ØD2	L1	L2	C/S
TOLERANCE	H9	h9	h9	+.010/-.000		+.000/-.002
WR02000X750X125M1005-SC	2.000	1.749	1.983	0.760	0.750	0.125
WR02000X1000X125M1005-SC	2.000	1.749	1.983	1.010	1.000	0.125
WR02250X187X125M1005-SC	2.250	1.999	2.233	0.197	0.187	0.125
WR02250X375X125M1005-SC	2.250	1.999	2.233	0.385	0.375	0.125
WR02250X500X125M1005-SC	2.250	1.999	2.233	0.510	0.500	0.125
WR02250X625X125M1005-SC	2.250	1.999	2.233	0.635	0.625	0.125
WR02250X750X125M1005-SC	2.250	1.999	2.233	0.760	0.750	0.125
WR02250X875X125M1005-SC	2.250	1.999	2.233	0.885	0.875	0.125
WR02250X1000X125M1005-SC	2.250	1.999	2.233	1.010	1.000	0.125
WR02500X250X125M1005-SC	2.500	2.249	2.483	0.260	0.250	0.125
WR02500X375X125M1005-SC	2.500	2.249	2.483	0.385	0.375	0.125
WR02500X500X125M1005-SC	2.500	2.249	2.483	0.510	0.500	0.125
WR02500X625X125M1005-SC	2.500	2.249	2.483	0.635	0.625	0.125
WR02500X750X125M1005-SC	2.500	2.249	2.483	0.760	0.750	0.125
WR02500X1000X125M1005-SC	2.500	2.249	2.483	1.010	1.000	0.125
WR02500X1250X125M1005-SC	2.500	2.249	2.483	1.260	1.250	0.125
WR02625X1000X125M1005-SC	2.625	2.374	2.608	1.010	1.000	0.125
WR02750X375X125M1005-SC	2.750	2.499	2.733	0.385	0.375	0.125
WR02750X500X125M1005-SC	2.750	2.499	2.733	0.510	0.500	0.125
WR02750X625X125M1005-SC	2.750	2.499	2.733	0.635	0.625	0.125
WR02750X750X125M1005-SC	2.750	2.499	2.733	0.760	0.750	0.125
WR02750X1000X125M1005-SC	2.750	2.499	2.733	1.010	1.000	0.125
WR02750X1500X125M1005-SC	2.750	2.499	2.733	1.510	1.500	0.125
WR03000X375X125M1005-SC	3.000	2.749	2.983	0.385	0.375	0.125
WR03000X500X125M1005-SC	3.000	2.749	2.983	0.510	0.500	0.125
WR03000X625X125M1005-SC	3.000	2.749	2.983	0.635	0.625	0.125
WR03000X750X125M1005-SC	3.000	2.749	2.983	0.760	0.750	0.125
WR03000X1000X125M1005-SC	3.000	2.749	2.983	1.010	1.000	0.125
WR03250X375X125M1005-SC	3.250	2.999	3.233	0.385	0.375	0.125
WR03250X500X125M1005-SC	3.250	2.999	3.233	0.510	0.500	0.125
WR03250X625X125M1005-SC	3.250	2.999	3.233	0.635	0.625	0.125
WR03250X750X125M1005-SC	3.250	2.999	3.233	0.760	0.750	0.125
WR03250X1000X125M1005-SC	3.250	2.999	3.233	1.010	1.000	0.125
WR03250X1500X125M1005-SC	3.250	2.999	3.233	1.510	1.500	0.125

Surface Finish: ISO 4287 & Chamfer Information on pages 7-9.
For ISO tolerance charts, refer to pages 12-13.

Compound information available on pages 20-37.

WR - Tight Tolerance Piston Guide Ring - M1005

A product of MFP Seals.

MFPSEALS®
www.mfpseals.com

PROFILE

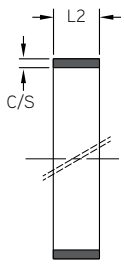

ROD APPLICATION

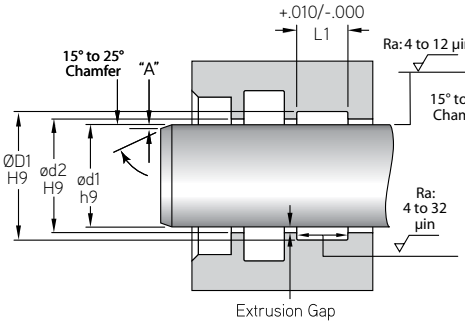

PISTON APPLICATION

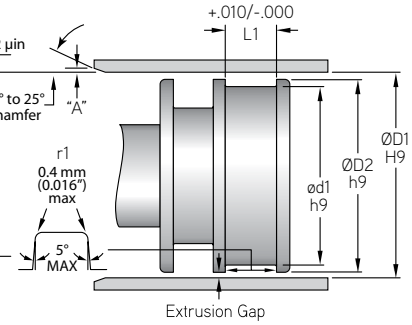

	PISTON APPLICATION					
MFP PART NUMBER	ØD1	ød1	ØD2	L1	L2	C/S
TOLERANCE	H9	h9	h9	+.010/-.000		+.000/-.002
WR03500X250X125M1005-SC	3.500	3.249	3.483	0.260	0.250	0.125
WR03500X375X125M1005-SC	3.500	3.249	3.483	0.385	0.375	0.125
WR03500X500X125M1005-SC	3.500	3.249	3.483	0.510	0.500	0.125
WR03500X625X125M1005-SC	3.500	3.249	3.483	0.635	0.625	0.125
WR03500X750X125M1005-SC	3.500	3.249	3.483	0.760	0.750	0.125
WR03500X1000X125M1005-SC	3.500	3.249	3.483	1.010	1.000	0.125
WR03750X250X125M1005-SC	3.750	3.499	3.733	0.260	0.250	0.125
WR03750X500X125M1005-SC	3.750	3.499	3.733	0.510	0.500	0.125
WR03750X750X125M1005-SC	3.750	3.499	3.733	0.760	0.750	0.125
WR03750X1000X125M1005-SC	3.750	3.499	3.733	1.010	1.000	0.125
WR04000X375X125M1005-SC	4.000	3.749	3.983	0.385	0.375	0.125
WR04000X500X125M1005-SC	4.000	3.749	3.983	0.510	0.500	0.125
WR04000X625X125M1005-SC	4.000	3.749	3.983	0.635	0.625	0.125
WR04000X750X125M1005-SC	4.000	3.749	3.983	0.760	0.750	0.125
WR04000X875X125M1005-SC	4.000	3.749	3.983	0.885	0.875	0.125
WR04000X1000X125M1005-SC	4.000	3.749	3.983	1.010	1.000	0.125
WR04000X1250X125M1005-SC	4.000	3.749	3.983	1.260	1.250	0.125
WR04000X2000X125M1005-SC	4.000	3.749	3.983	2.010	2.000	0.125
WR04250X250X125M1005-SC	4.250	3.999	4.233	0.260	0.250	0.125
WR04250X500X125M1005-SC	4.250	3.999	4.233	0.510	0.500	0.125
WR04250X625X125M1005-SC	4.250	3.999	4.233	0.635	0.625	0.125
WR04250X750X125M1005-SC	4.250	3.999	4.233	0.760	0.750	0.125
WR04250X1000X125M1005-SC	4.250	3.999	4.233	1.010	1.000	0.125
WR04500X375X125M1005-SC	4.500	4.249	4.483	0.385	0.375	0.125
WR04500X500X125M1005-SC	4.500	4.249	4.483	0.510	0.500	0.125
WR04500X625X125M1005-SC	4.500	4.249	4.483	0.635	0.625	0.125
WR04500X1000X125M1005-SC	4.500	4.249	4.483	1.010	1.000	0.125
WR04750X500X125M1005-SC	4.750	4.499	4.733	0.510	0.500	0.125
WR04750X750X125M1005-SC	4.750	4.499	4.733	0.760	0.750	0.125
WR04750X1000X125M1005-SC	4.750	4.499	4.733	1.010	1.000	0.125
WR05000X375X125M1005-SC	5.000	4.749	4.982	0.385	0.375	0.125
WR05000X500X125M1005-SC	5.000	4.749	4.982	0.510	0.500	0.125
WR05000X625X125M1005-SC	5.000	4.749	4.982	0.635	0.625	0.125
WR05000X750X125M1005-SC	5.000	4.749	4.982	0.760	0.750	0.125

Compound information available on pages 20-37.

Surface Finish: ISO 4287 & Chamfer Information on pages 7-9.
For ISO tolerance charts, refer to pages 12-13.

MFPSEALS®
www.mfpseals.com

WR - Tight Tolerance Piston Guide Ring - M1005

A product of MFP Seals.

PROFILE

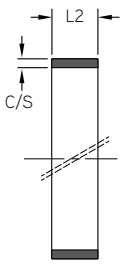

ROD APPLICATION

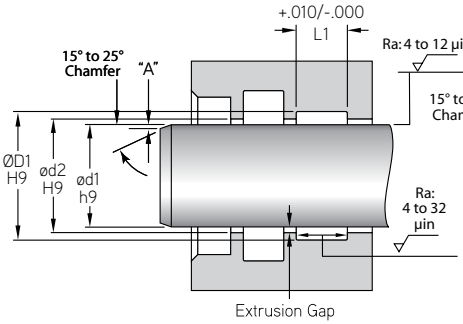

PISTON APPLICATION

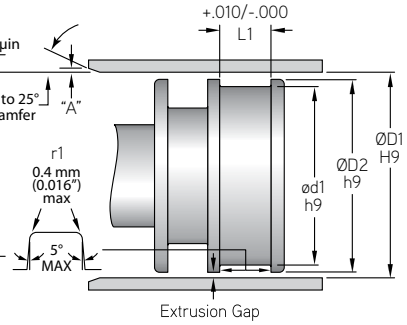

MFP PART NUMBER	PISTON APPLICATION ØD1	ød1	ØD2	L1	L2	C/S
TOLERANCE	H9	h9	h9	+.010/-.000		+.000/-.002
WR05000X1000X125M1005-SC	5.000	4.749	4.982	1.010	1.000	0.125
WR05000X1250X125M1005-SC	5.000	4.749	4.982	1.260	1.250	0.125
WR05000X1500X125M1005-SC	5.000	4.749	4.982	1.510	1.500	0.125
WR05250X500X125M1005-SC	5.250	4.999	5.232	0.510	0.500	0.125
WR05250X625X125M1005-SC	5.250	4.999	5.232	0.635	0.625	0.125
WR05250X750X125M1005-SC	5.250	4.999	5.232	0.760	0.750	0.125
WR05250X1000X125M1005-SC	5.250	4.999	5.232	1.010	1.000	0.125
WR05250X1500X125M1005-SC	5.250	4.999	5.232	1.510	1.500	0.125
WR05375X500X125M1005-SC	5.375	5.124	5.357	0.510	0.500	0.125
WR05500X375X125M1005-SC	5.500	5.249	5.482	0.385	0.375	0.125
WR05500X500X125M1005-SC	5.500	5.249	5.482	0.510	0.500	0.125
WR05500X625X125M1005-SC	5.500	5.249	5.482	0.635	0.625	0.125
WR05500X750X125M1005-SC	5.500	5.249	5.482	0.760	0.750	0.125
WR05500X1000X125M1005-SC	5.500	5.249	5.482	1.010	1.000	0.125
WR05750X500X125M1005-SC	5.750	5.499	5.732	0.510	0.500	0.125
WR05750X750X125M1005-SC	5.750	5.499	5.732	0.760	0.750	0.125
WR05750X1000X125M1005-SC	5.750	5.499	5.732	1.010	1.000	0.125
WR05750X1250X125M1005-SC	5.750	5.499	5.732	1.260	1.250	0.125
TOLERANCE	H9	h9	h9	+.010/-.000		+.000/-.003
WR06000X500X125M1005-SC	6.000	5.749	5.980	0.510	0.500	0.125
WR06000X625X125M1005-SC	6.000	5.749	5.980	0.635	0.625	0.125
WR06000X750X125M1005-SC	6.000	5.749	5.980	0.760	0.750	0.125
WR06000X1000X125M1005-SC	6.000	5.749	5.980	1.010	1.000	0.125
WR06000X1250X125M1005-SC	6.000	5.749	5.980	1.260	1.250	0.125
WR06250X500X125M1005-SC	6.250	5.999	6.230	0.510	0.500	0.125
WR06250X625X125M1005-SC	6.250	5.999	6.230	0.635	0.625	0.125
WR06250X750X125M1005-SC	6.250	5.999	6.230	0.760	0.750	0.125
WR06250X1000X125M1005-SC	6.250	5.999	6.230	1.010	1.000	0.125
WR06500X500X125M1005-SC	6.500	6.249	6.480	0.510	0.500	0.125
WR06500X625X125M1005-SC	6.500	6.249	6.480	0.635	0.625	0.125
WR06500X750X125M1005-SC	6.500	6.249	6.480	0.760	0.750	0.125
WR06500X1000X125M1005-SC	6.500	6.249	6.480	1.010	1.000	0.125
WR06500X1500X125M1005-SC	6.500	6.249	6.480	1.510	1.500	0.125
WR06750X500X125M1005-SC	6.750	6.499	6.730	0.510	0.500	0.125

Surface Finish: ISO 4287 & Chamfer Information on pages 7-9.
For ISO tolerance charts, refer to pages 12-13.

Compound information available on pages 20-37.

WR - Tight Tolerance Piston Guide Ring - M1005

A product of MFP Seals.

MFPSEALS®
www.mfpseals.com

PROFILE

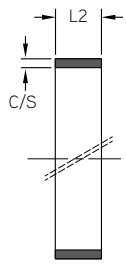

ROD APPLICATION

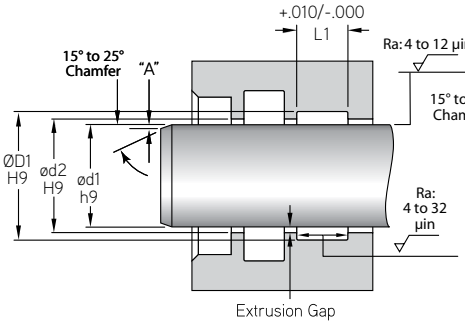

PISTON APPLICATION

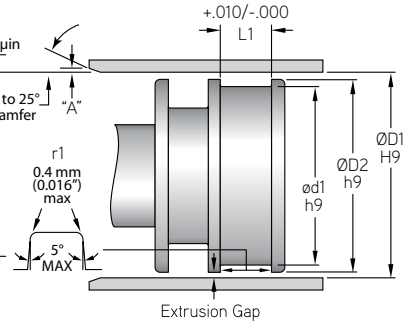

MFP PART NUMBER	PISTON APPLICATION ØD1	ød1	ØD2	L1	L2	C/S
TOLERANCE	H9	h9	h9	+.010/-.000		+.000/-.003
WR06750X1000X125M1005-SC	6.750	6.499	6.730	1.010	1.000	0.125
WR07000X375X125M1005-SC	7.000	6.749	6.980	0.385	0.375	0.125
WR07000X500X125M1005-SC	7.000	6.749	6.980	0.510	0.500	0.125
WR07000X625X125M1005-SC	7.000	6.749	6.980	0.635	0.625	0.125
WR07000X750X125M1005-SC	7.000	6.749	6.980	0.760	0.750	0.125
WR07000X1000X125M1005-SC	7.000	6.749	6.980	1.010	1.000	0.125
WR07000X1500X125M1005-SC	7.000	6.749	6.980	1.510	1.500	0.125
WR07250X750X125M1005-SC	7.250	6.999	7.230	0.760	0.750	0.125
WR07250X1000X125M1005-SC	7.250	6.999	7.230	1.010	1.000	0.125
WR07500X500X125M1005-SC	7.500	7.249	7.480	0.510	0.500	0.125
WR07500X1000X125M1005-SC	7.500	7.249	7.480	1.010	1.000	0.125
WR07750X500X125M1005-SC	7.750	7.499	7.730	0.510	0.500	0.125
WR07750X750X125M1005-SC	7.750	7.499	7.730	0.760	0.750	0.125
WR08000X500X125M1005-SC	8.000	7.749	7.979	0.510	0.500	0.125
WR08000X625X125M1005-SC	8.000	7.749	7.979	0.635	0.625	0.125
WR08000X750X125M1005-SC	8.000	7.749	7.979	0.760	0.750	0.125
WR08000X1000X125M1005-SC	8.000	7.749	7.979	1.010	1.000	0.125
WR08000X1250X125M1005-SC	8.000	7.749	7.979	1.260	1.250	0.125
WR08000X1500X125M1005-SC	8.000	7.749	7.979	1.510	1.500	0.125
WR08000X2000X125M1005-SC	8.000	7.749	7.979	2.010	2.000	0.125

Compound information available on pages 20-37.

Surface Finish: ISO 4287 & Chamfer Information on pages 7-9.
For ISO tolerance charts, refer to pages 12-13.

MFPSEALS®
www.mfpseals.com

XS Seal® - Spring Energized Seal

A product of MFP Seals.

XS SEAL® - SPRING ENERGIZED SEALS

MFP Seals produces a full range of Spring Energized Seals for applications that present challenges to conventional seal designs, no matter what media will be encountered. Common uses for our XS Seal® line, range from Explosive Decompression Resistant applications or AED seals, to Extreme Temperatures, High Surface Speeds, Non-Lubricated Systems, Extreme Pressures, Vacuum, and so much more!

With 33 standard profiles, plus the ability to create custom designs, MFP Seals has an XS Seal® that is designed to fit your application. Our engineers will match the various spring types such as Helical, Slanted Coil, and V, to your intended use, made from a material that is perfect for the job. Our Spring Energizers are available in Stainless Steel, Hastelloy, Elgiloy, and other Alloys. Contact your MFP Seals sales representative to get your Spring Energized Seal design started today.

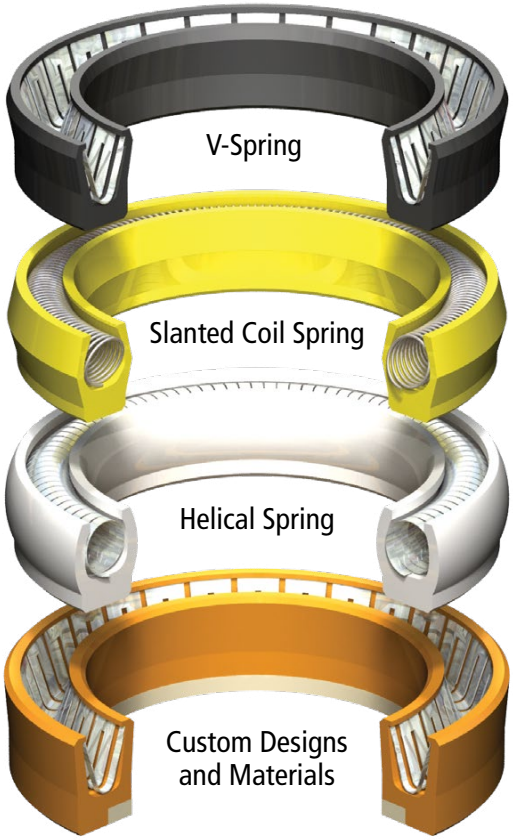

Custom Designs and Materials are available. Please contact your MFP Seals Sales Representative for more details.

MFP PART NUMBER

XSDA20-187-01.000-250T5100E

SEAL TYPE — PROFILE — SPRING STYLE — ID LIP — OD LIP — C/S — ID — HEIGHT — JACKET COMPOUND — SPRING MATERIAL

V SPRING ENERGIZED SEALS

MFP Seals V-Spring Loaded Seals are a cantilever beam design that is applied as a radial or axial compression energizer for a U-Cup style seal. The V-Spring provides a moderate load over a wide deflection range and is used in dynamic and static seal applications.

SLANTED COIL SPRING ENERGIZED SEALS

MFP Seals Slanted Coil Spring Loaded Seals produce a very flat load curve when compressed. The Slanted Coil Spring is designed for use in U-Cup seals, as well as other configurations, when a constant predictable load over a wide deflection range is desired. These Slanted Coil Spring Seals are available in light, medium and heavy load designs as well as being offered with gold, silver and nickel plating for use in Electronic and Semiconductor applications.

HELICAL SPRING ENERGIZED SEALS

MFP Seals Helical Spring Loaded Seals are made from a flat ribbon and wound into a round cross section helix geometry. The Helical Spring is designed for use in U-Cup style seals, as well as other configurations, for radial or axial compression energized seals and produces a very high unit load over a small deflection range. The Helical Spring Loaded Seal is usually used in static or slow dynamic applications and often for extremely low temperatures.

Surface Finish: ISO 4287 & Chamfer Information on pages 7-9.
For ISO tolerance charts, refer to pages 12-13.

Compound information available on pages 20-37.

XS Seal® - Spring Energized Seal

A product of MFP Seals.

MFPSEALS®
www.mfpseals.com

XS SEAL® SPRING ENERGIZED SEAL PART NUMBER NOMENCLATURE - INCH SIZES

XS D A 2 0 - 187 - 01.000 - 250 T5100E

SEAL TYPE

C/S
Examples:
125 = .125"
187 = .187"
250 = .250"
750 = .750"

L2 (Height)
Examples:
125 = .125"
187 = .187"
250 = .250"
750 = .750"

OD Lip
0 - Same as ID
1 - Radius
2 - Scraper
3 - Double Bump
4 - Chamfered
5 - Multi Lip
6 - N/A

ød1 (ID)
Examples:
00.250 = 0.250"
00.500 = 0.500"
01.000 = 1.000"
01.500 = 1.500"

Jacket Compound
For compound descriptions and temperature ranges, Please refer to page 26.
Not available in all compounds.

ID Lip
1 - Radius
2 - Scraper
3 - Double Bump
4 - Chamfered
5 - Multi Lip
6 - N/A

Spring Material
E - Elgiloy
H - Hastelloy
S - Stainless Steel

Other materials available.

Spring Style
A - V
B - Helical
C - Slanted Coil - Light Duty
D - Slanted Coil - Med. Duty
E - Slanted Coil - Heavy Duty

Profile
D - Standard
E - External
F - Flanged
H - O-Ring in Heel
I - Internal
Q - O-Ring Center

MFP XS SEAL® SPRING ENERGIZED SEAL PROFILES

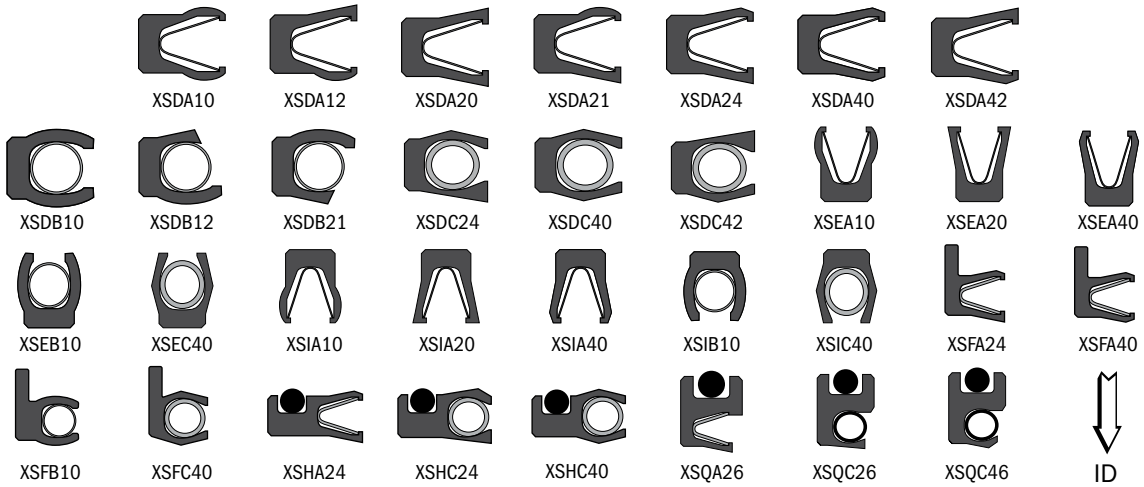

Compound information available on pages 20-37.

Surface Finish: ISO 4287 & Chamfer Information on pages 7-9.
For ISO tolerance charts, refer to pages 12-13.

ENGINEERING GUIDE

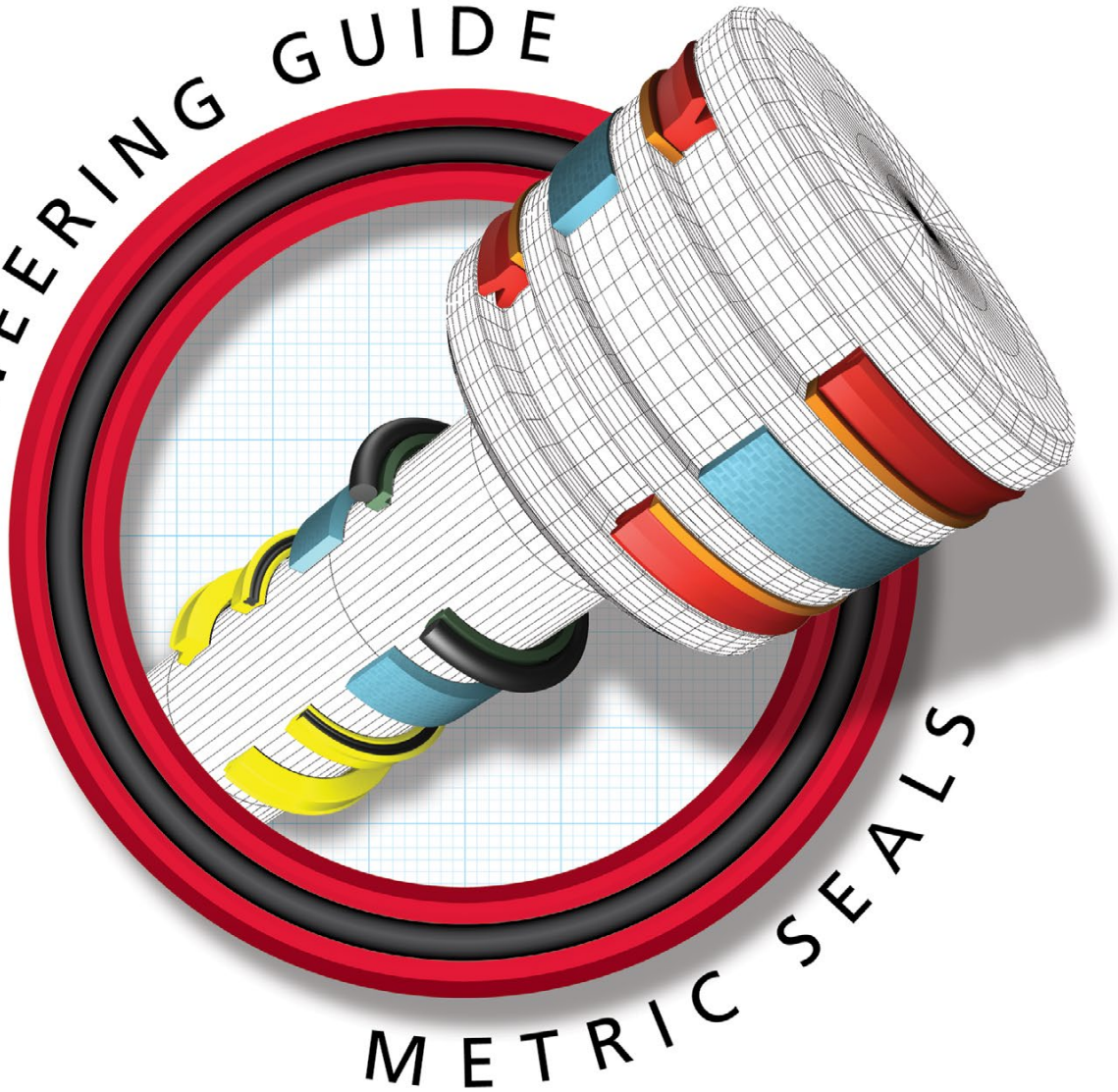

METRIC SEALS

METRIC SEAL PROFILES

All metric measurements are in millimeters (mm), unless otherwise noted.

Surface Finish: ISO 4287 & Chamfer Information on pages 7-9.
For ISO tolerance charts, refer to pages 12-13.

MFPSEALS®
www.mfpseals.com

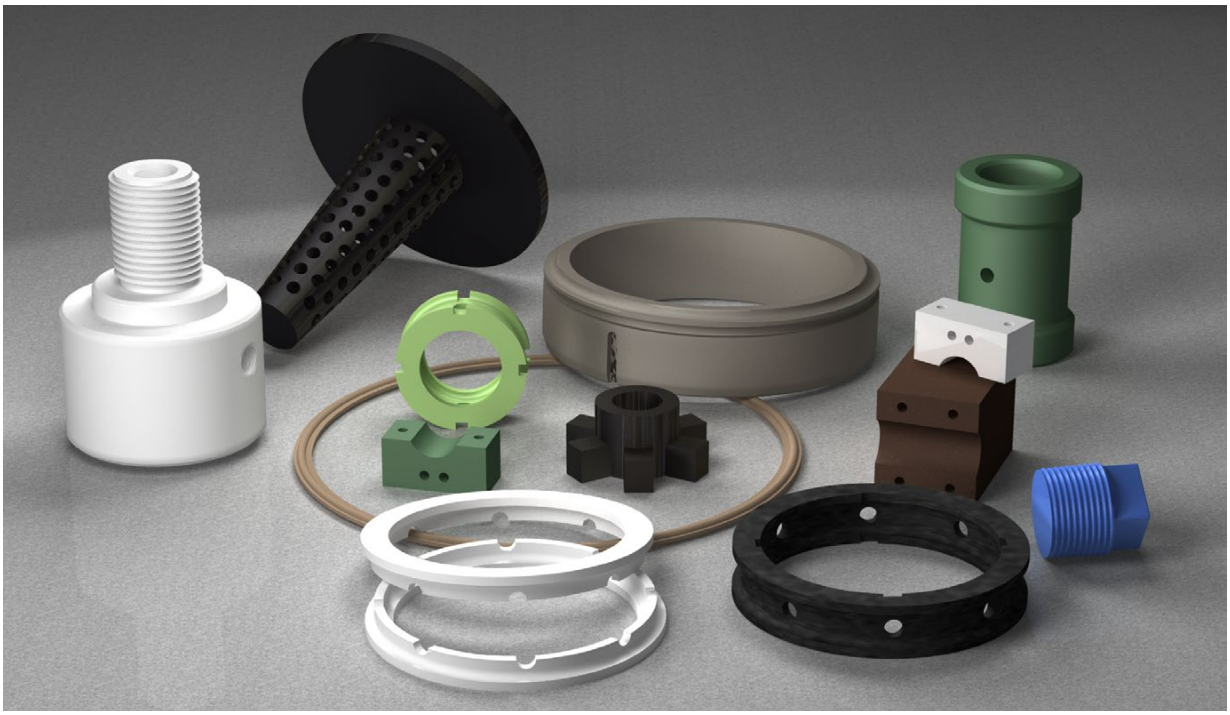

MACHINED PLASTICS

CUSTOM MANUFACTURED FOR YOUR APPLICATION

MFP Seals can handle the design, engineering and production of machined plastics. Or, utilize your drawing to produce prototypes and production quantities, of products that meet your specifications. MFP Seals utilizes the latest CNC machines and experienced machinists to manufacture PTFE and other plastic products. MFP Seals is not in the business of machining metals so there is little risk of contamination. If you are looking for a prototype part, or a production order, simple or complex, all of our products are made to the same quality standards, to ensure customer satisfaction.

All of the standard machining and fabrication operations, boring, drilling, facing, grinding, reaming, surface finishing, tapping, threading, turning, annealing, etching and bonding, can be performed on virgin and filled PTFE materials, and other plastics (including glass and bronze filled PTFE). Our Polytetrafluoroethylene (PTFE), products are highly wear resistant, have high impact strength, an extremely low coefficient of friction and have less weight than similar metal components. They are heat, moisture, chemical and radiation resistant.

MFP Seals can fabricate your PTFE or plastic products in almost any shape, drilled, threaded, tapered, perforated, tapped, etc. Give MFP Seals a call, we can assist you, from start to finish, with your product/part design, selection of materials and tooling requirements.

Some of the products we can produce from PTFE:

Back-Up Rings • Ball Valve Seats • Bearing Tapes
Bearings Bushings • Caps & Plugs • Dip Tubes
Custom Components • Envelope Gaskets
Gears • Insulator Blocks • Lantern Rings
Packing Balls • Pump Impellers • Sanitary Gaskets
Skived Tapes • Spacers • Tube Sleeves
Tube Connectors • Valve Components
Spargers • O-Rings

MFPSEALS®
www.mfpseals.com

Quick Metric O-Ring Gland Design

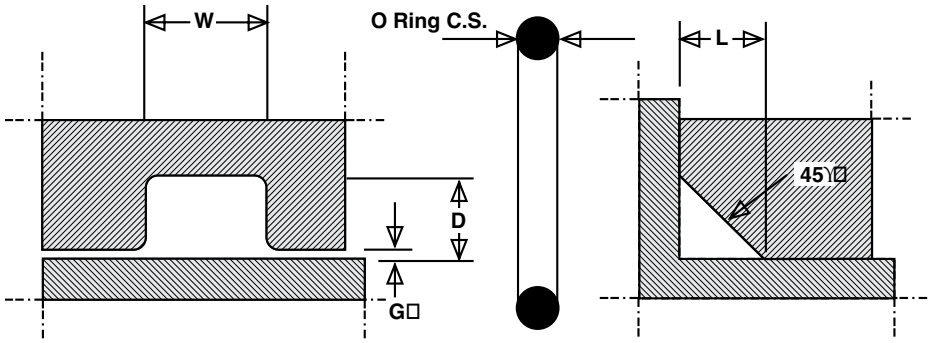

O Ring C.S.	Dynamic D	Dynamic Tol.	Static D	Static Tol.	No B/U W	One B/U W	Two B/U W	Triangular L	Triangular Tol.
1.0	0.90		0.80		1.30	–	–	1.40	
1.2	1.08	+0.00	0.96		1.56	–	–	1.60	
1.5	1.35	-0.05	1.20		1.95	–	–	2.00	
1.9	1.72		1.53		2.57	4.10	6.00	2.65	
2.0	1.80		1.60	+0.00	2.60	4.10	5.50	2.70	
				-0.05					-0.00
2.4	2.16		1.92		3.12	4.60	6.00	3.20	+0.05
2.5	2.25		2.00		3.25	4.80	6.20	3.40	
2.7	2.41		2.13		3.50	4.80	6.50	3.65	
3.0	2.70	+0.06	2.40		3.90	5.40	6.80	4.00	
3.1	2.75	-0.06	2.42		4.00	5.50	6.90	4.10	
				+0.10					
3.5	3.15		2.80	-0.10	4.55	6.10	7.50	4.80	
4.0	3.60		3.20		5.20	6.70	8.10	5.40	
5.0	4.50		4.00		6.50	8.40	10.20	6.70	
5.7	5.18	+0.10	4.60	+0.15	7.47	9.30	11.10	7.70	-0.00
6.0	5.40	-0.10	4.80	-0.15	7.80	9.90	12.30	8.00	+0.10
8.4	7.65		6.80		11.05	13.20	15.40	11.40	

Surface Finish: ISO 4287 & Chamfer Information on pages 7-9.
For ISO tolerance charts, refer to pages 12-13.

Compound information available on pages 20-37.

O-Ring Gland Design - Metric

MFPSEALS
www.mfpseals.com

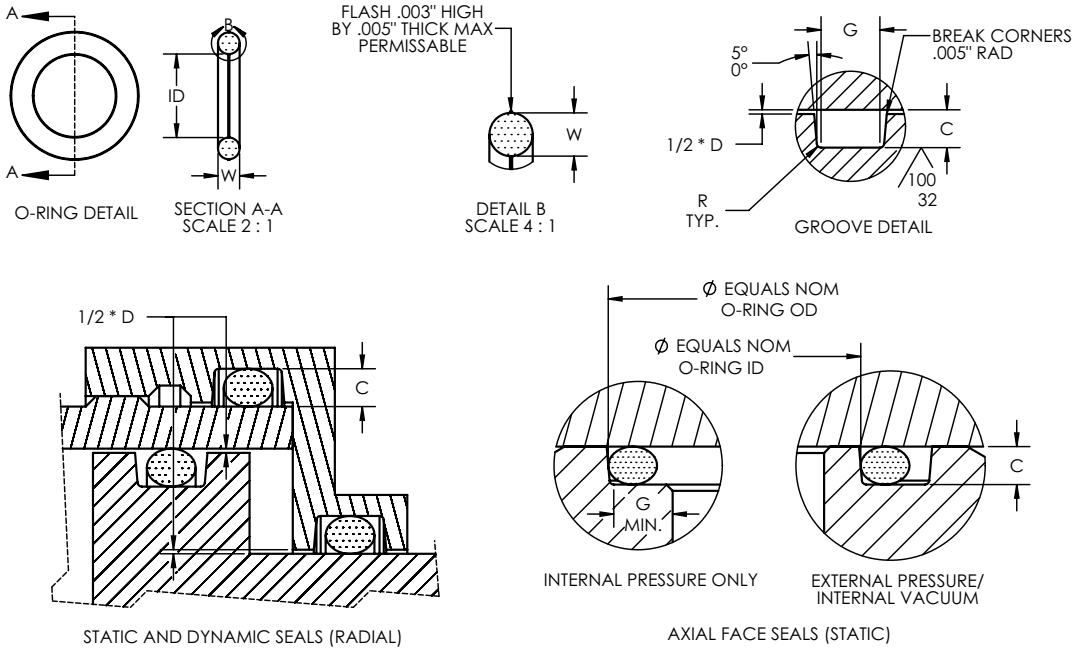

Industrial Reciprocating O-Ring Packing Glands

W s	C Gland Depth (radial) t static	Squeeze mm	Squeeze %	D Diametrical Clearance Max.	G Groove Width +0.02 -0.00 No Backup Rings	One Backup Ring	Two Backup Rings	R Groove Radius	Eccen-tricity Max.
1.00 ± 0.07	0.60 - 0.70	0.23 - 0.47	25% - 44%	0.10	1.4			0.2	0.05
1.50 ± 0.08	1.00 - 1.10	0.32 - 0.58	23% - 37%	0.10	2.0			0.2	0.05
1.78 ± 0.08	1.25 - 1.35	0.35 - 0.61	21% - 33%	0.10	2.4	3.4	4.4	0.2	0.05
2.00 ± 0.08	1.45 - 1.55	0.37 - 0.63	19% - 30%	0.10	2.7	3.7	4.7	0.2	0.05
2.40 ± 0.09	1.80 - 1.90	0.41 - 0.69	18% - 28%	0.10	3.3	4.7	6.1	0.2	0.05
2.50 ± 0.09	1.90 - 2.00	0.41 - 0.69	17% - 27%	0.10	3.4	4.9	6.4	0.2	0.05
2.62 ± 0.09	2.00 - 2.10	0.43 - 0.71	17% - 26%	0.13	3.6	5.1	6.6	0.3	0.08
3.00 ± 0.09	2.35 - 2.45	0.46 - 0.74	16% - 24%	0.13	4.2	5.7	7.2	0.3	0.08
3.50 ± 0.1	2.73 - 2.87	0.53 - 0.87	16% - 24%	0.15	4.8	6.3	7.8	0.3	0.10
3.55 ± 0.1	2.78 - 2.92	0.53 - 0.87	15% - 24%	0.15	4.8	6.3	7.8	0.3	0.10
4.00 ± 0.1	3.18 - 3.32	0.58 - 0.92	15% - 22%	0.15	5.4	6.9	8.4	0.3	0.10
5.00 ± 0.13	4.05 - 4.25	0.62 - 1.08	13% - 21%	0.15	6.8	8.8	10.8	0.3	0.10
5.33 ± 0.13	4.30 - 4.50	0.7 - 1.16	13% - 21%	0.15	7.2	9.2	11.2	0.5	0.15
5.70 ± 0.13	4.60 - 4.80	0.77 - 1.23	14% - 21%	0.15	7.7	9.9	12	0.5	0.15
6.99 ± 0.15	5.75 - 5.95	0.89 - 1.39	13% - 19%	0.18	9.6	12.1	14.6	0.5	0.20
8.40 ± 0.15	6.90 - 7.10	1.15 - 1.65	14% - 19%	0.18	11.5	14.6	17.6	0.5	0.20

The information shown is provided as a general guideline for O-Ring glands. Before machining your glands, please contact the MFP Seals Engineering Department to determine the correct measurements for your specific application. *Continued on next page.*

Industrial O-Ring Dynamic Hydraulic Glands

W s	C Gland Depth (radial) t static	Squeeze mm	Squeeze %	D Diametrical Clearance Max.	G Groove Width +0.02 -0.00 No Backup Rings	One Backup Ring	Two Backup Rings	R Groove Radius	Eccen-tricity Max.
1.00 ± 0.07	0.73 - 0.77	0.16 - 0.34	17% - 32%	0.10	1.4			0.2	0.05
1.50 ± 0.08	1.18 - 1.22	0.20 - 0.40	14% - 25%	0.10	2.0			0.2	0.05
1.78 ± 0.08	1.43 - 1.47	0.23 - 0.43	14% - 23%	0.10	2.4	3.4	4.4	0.2	0.05
2.00 ± 0.08	1.63 - 1.67	0.25 - 0.45	13% - 22%	0.10	2.7	3.7	4.7	0.2	0.05
2.40 ± 0.09	1.98 - 2.02	0.29 - 0.51	13% - 20%	0.10	3.3	4.7	6.1	0.2	0.05
2.50 ± 0.09	2.08 - 2.12	0.29 - 0.51	12% - 20%	0.10	3.4	4.9	6.4	0.2	0.05
2.62 ± 0.09	2.23 - 2.27	0.26 - 0.48	10% - 18%	0.13	3.6	5.1	6.6	0.3	0.08
3.00 ± 0.09	2.53 - 2.57	0.34 - 0.56	12% - 18%	0.13	4.2	5.7	7.2	0.3	0.08
3.50 ± 0.10	3.00 - 3.10	0.30 - 0.60	9% - 17%	0.15	4.8	6.3	7.8	0.3	0.10
3.55 ± 0.10	3.05 - 3.15	0.30 - 0.60	9% - 16%	0.15	4.8	6.3	7.8	0.3	0.10
4.00 ± 0.10	3.45 - 3.55	0.35 - 0.65	9% - 16%	0.15	5.4	6.9	8.4	0.3	0.10
5.00 ± 0.13	4.40 - 4.50	0.37 - 0.73	8% - 14%	0.15	6.8	8.8	10.8	0.3	0.10
5.33 ± 0.13	4.65 - 4.75	0.45 - 0.81	9% - 15%	0.15	7.2	9.2	11.2	0.5	0.15
5.70 ± 0.13	5.05 - 5.15	0.42 - 0.78	8% - 13%	0.15	7.7	9.9	12	0.5	0.15
6.99 ± 0.15	6.20 - 6.30	0.54 - 0.94	8% - 13%	0.18	9.6	12.1	14.6	0.5	0.20
8.40 ± 0.15	7.50 - 7.60	0.65 - 1.05	8% - 12%	0.18	11.5	14.6	17.6	0.5	0.20

Industrial O-Ring Dynamic Pneumatic Glands

W s	C Gland Depth (radial) t static	Squeeze mm	Squeeze %	D Diametrical Clearance Max.	G Groove Width +0.02 -0.00 No Backup Rings	One Backup Ring	Two Backup Rings	R Groove Radius	Eccen-tricity Max.
1.00 ± 0.07	0.78 - 0.82	0.11 - 0.29	12% - 27%	0.10	1.4			0.2	0.05
1.50 ± 0.08	1.23 - 1.27	0.15 - 0.35	11% - 22%	0.10	2.0			0.2	0.05
1.78 ± 0.08	1.53 - 1.57	0.13 - 0.33	8% - 18%	0.10	2.4	3.4	4.4	0.2	0.05
2.00 ± 0.08	1.73 - 1.77	0.15 - 0.35	8% - 17%	0.10	2.7	3.7	4.7	0.2	0.05
2.40 ± 0.09	2.08 - 2.12	0.19 - 0.41	8% - 16%	0.10	3.3	4.7	6.1	0.2	0.05
2.50 ± 0.09	2.18 - 2.22	0.19 - 0.41	8% - 16%	0.10	3.4	4.9	6.4	0.2	0.05
2.62 ± 0.09	2.33 - 2.37	0.16 - 0.38	6% - 14%	0.13	3.6	5.1	6.6	0.3	0.08
3.00 ± 0.09	2.68 - 2.72	0.19 - 0.41	7% - 13%	0.13	4.2	5.7	7.2	0.3	0.08
3.50 ± 0.10	3.15 - 3.25	0.15 - 0.45	4% - 13%	0.15	4.8	6.3	7.8	0.3	0.10
3.55 ± 0.10	3.20 - 3.30	0.15 - 0.45	4% - 12%	0.15	4.8	6.3	7.8	0.3	0.10
4.00 ± 0.10	3.60 - 3.70	0.20 - 0.50	5% - 12%	0.15	5.4	6.9	8.4	0.3	0.10
5.00 ± 0.13	4.60 - 4.70	0.17 - 0.53	3% - 10%	0.15	6.8	8.8	10.8	0.3	0.10
5.33 ± 0.13	4.85 - 4.95	0.25 - 0.61	5% - 11%	0.15	7.2	9.2	11.2	0.5	0.15
5.70 ± 0.13	5.25 - 5.35	0.22 - 0.58	4% - 10%	0.15	7.7	9.9	12	0.5	0.15
6.99 ± 0.15	6.50 - 6.60	0.24 - 0.64	4% - 9%	0.18	9.6	12.1	14.6	0.5	0.20
8.40 ± 0.15	7.85 - 7.95	0.30 - 0.70	4% - 8%	0.18	11.5	14.6	17.6	0.5	0.20

Surface Finish: ISO 4287 & Chamfer Information on pages 7-9.
For ISO tolerance charts, refer to pages 12-13.

Compound information available on pages 20-37.

Metric O-Ring Sizes - BS4518

MFPSEALS
www.mfpseals.com

Measurements In Millimeters				Measurements In Inches			
ID	±	CS	±	ID	±	CS	±
1.6 MM - CROSS SECTION							
3.1	0.14	1.6	0.08	0.122	0.006	0.063	0.003
4.1	0.14	1.6	0.08	0.161	0.006	0.063	0.003
5.1	0.15	1.6	0.08	0.201	0.006	0.063	0.003
6.1	0.16	1.6	0.08	0.240	0.006	0.063	0.003
7.1	0.17	1.6	0.08	0.280	0.007	0.063	0.003
8.1	0.18	1.6	0.08	0.319	0.007	0.063	0.003
9.1	0.18	1.6	0.08	0.358	0.007	0.063	0.003
10.1	0.19	1.6	0.08	0.398	0.007	0.063	0.003
11.1	0.2	1.6	0.08	0.437	0.008	0.063	0.003
12.1	0.21	1.6	0.08	0.476	0.008	0.063	0.003
13.1	0.21	1.6	0.08	0.516	0.008	0.063	0.003
14.1	0.22	1.6	0.08	0.555	0.009	0.063	0.003
15.1	0.23	1.6	0.08	0.594	0.009	0.063	0.003
16.1	0.24	1.6	0.08	0.634	0.009	0.063	0.003
17.1	0.24	1.6	0.08	0.673	0.009	0.063	0.003
18.1	0.25	1.6	0.08	0.713	0.01	0.063	0.003
19.1	0.26	1.6	0.08	0.752	0.01	0.063	0.003
20.1	0.27	1.6	0.08	0.791	0.011	0.063	0.003
21.1	0.27	1.6	0.08	0.831	0.011	0.063	0.003
22.1	0.28	1.6	0.08	0.870	0.011	0.063	0.003
25.1	0.3	1.6	0.08	0.988	0.012	0.063	0.003
27.1	0.32	1.6	0.08	1.067	0.013	0.063	0.003
29.1	0.33	1.6	0.08	1.146	0.013	0.063	0.003
32.1	0.35	1.6	0.08	1.264	0.014	0.063	0.003
35.1	0.37	1.6	0.08	1.382	0.015	0.063	0.003
37.1	0.39	1.6	0.08	1.461	0.015	0.063	0.003
2.4 MM - CROSS SECTION							
3.6	0.14	2.4	0.09	0.142	0.006	0.094	0.004
4.6	0.15	2.4	0.09	0.181	0.006	0.094	0.004
5.6	0.16	2.4	0.09	0.220	0.006	0.094	0.004
6.6	0.16	2.4	0.09	0.260	0.006	0.094	0.004
7.6	0.17	2.4	0.09	0.299	0.007	0.094	0.004
8.6	0.18	2.4	0.09	0.339	0.007	0.094	0.004
9.6	0.19	2.4	0.09	0.378	0.007	0.094	0.004
10.6	0.19	2.4	0.09	0.417	0.007	0.094	0.004
11.6	0.2	2.4	0.09	0.457	0.008	0.094	0.004
12.6	0.21	2.4	0.09	0.496	0.008	0.094	0.004
13.6	0.22	2.4	0.09	0.535	0.009	0.094	0.004
14.6	0.22	2.4	0.09	0.575	0.009	0.094	0.004
15.6	0.23	2.4	0.09	0.614	0.009	0.094	0.004
16.6	0.24	2.4	0.09	0.654	0.009	0.094	0.004
17.6	0.25	2.4	0.09	0.693	0.01	0.094	0.004
18.6	0.25	2.4	0.09	0.732	0.01	0.094	0.004
19.6	0.26	2.4	0.09	0.772	0.01	0.094	0.004
20.6	0.27	2.4	0.09	0.811	0.011	0.094	0.004
21.6	0.28	2.4	0.09	0.850	0.011	0.094	0.004
24.6	0.3	2.4	0.09	0.969	0.012	0.094	0.004
27.6	0.32	2.4	0.09	1.087	0.013	0.094	0.004
29.6	0.33	2.4	0.09	1.165	0.013	0.094	0.004
31.6	0.35	2.4	0.09	1.244	0.014	0.094	0.004
34.6	0.37	2.4	0.09	1.362	0.015	0.094	0.004
35.6	0.38	2.4	0.09	1.402	0.015	0.094	0.004
37.6	0.39	2.4	0.09	1.480	0.015	0.094	0.004
39.6	0.41	2.4	0.09	1.559	0.016	0.094	0.004
41.6	0.42	2.4	0.09	1.638	0.017	0.094	0.004
44.6	0.44	2.4	0.09	1.756	0.017	0.094	0.004
45.6	0.45	2.4	0.09	1.795	0.018	0.094	0.004
47.6	0.46	2.4	0.09	1.874	0.018	0.094	0.004
49.6	0.48	2.4	0.09	1.953	0.019	0.094	0.004

Measurements In Millimeters				Measurements In Inches			
ID	±	CS	±	ID	±	CS	±
2.4 MM - CROSS SECTION							
51.6	0.49	2.4	0.09	2.031	0.019	0.094	0.004
54.6	0.51	2.4	0.09	2.150	0.02	0.094	0.004
55.6	0.52	2.4	0.09	2.189	0.02	0.094	0.004
57.6	0.53	2.4	0.09	2.268	0.021	0.094	0.004
58.6	0.54	2.4	0.09	2.307	0.021	0.094	0.004
59.6	0.55	2.4	0.09	2.346	0.022	0.094	0.004
61.6	0.56	2.4	0.09	2.425	0.022	0.094	0.004
62.6	0.57	2.4	0.09	2.465	0.022	0.094	0.004
64.6	0.58	2.4	0.09	2.543	0.023	0.094	0.004
67.6	0.6	2.4	0.09	2.661	0.024	0.094	0.004
69.6	0.62	2.4	0.09	2.740	0.024	0.094	0.004
3 MM - CROSS SECTION							
19.5	0.26	3	0.09	0.768	0.01	0.118	0.004
21.5	0.28	3	0.09	0.846	0.011	0.118	0.004
22.5	0.28	3	0.09	0.886	0.011	0.118	0.004
24.5	0.3	3	0.09	0.965	0.012	0.118	0.004
25.5	0.31	3	0.09	1.004	0.012	0.118	0.004
26.5	0.31	3	0.09	1.043	0.012	0.118	0.004
27.5	0.32	3	0.09	1.083	0.013	0.118	0.004
29.5	0.33	3	0.09	1.161	0.013	0.118	0.004
31.5	0.35	3	0.09	1.240	0.014	0.118	0.004
32.5	0.36	3	0.09	1.280	0.014	0.118	0.004
34.5	0.37	3	0.09	1.358	0.015	0.118	0.004
35.5	0.38	3	0.09	1.398	0.015	0.118	0.004
36.5	0.38	3	0.09	1.437	0.015	0.118	0.004
37.5	0.39	3	0.09	1.476	0.015	0.118	0.004
39.5	0.41	3	0.09	1.555	0.016	0.118	0.004
41.5	0.42	3	0.09	1.634	0.017	0.118	0.004
42.5	0.43	3	0.09	1.673	0.017	0.118	0.004
44.5	0.44	3	0.09	1.752	0.017	0.118	0.004
49.5	0.48	3	0.09	1.949	0.019	0.118	0.004
54.5	0.51	3	0.09	2.146	0.02	0.118	0.004
55.5	0.52	3	0.09	2.185	0.02	0.118	0.004
57.5	0.53	3	0.09	2.264	0.021	0.118	0.004
59.5	0.55	3	0.09	2.343	0.022	0.118	0.004
62.5	0.57	3	0.09	2.461	0.022	0.118	0.004
64.5	0.58	3	0.09	2.539	0.023	0.118	0.004
69.5	0.62	3	0.09	2.736	0.024	0.118	0.004
74.5	0.65	3	0.09	2.933	0.026	0.118	0.004
79.5	0.68	3	0.09	3.130	0.027	0.118	0.004
84.5	0.72	3	0.09	3.327	0.028	0.118	0.004
89.5	0.75	3	0.09	3.524	0.03	0.118	0.004
94.5	0.79	3	0.09	3.720	0.031	0.118	0.004
99.5	0.82	3	0.09	3.917	0.032	0.118	0.004
104.5	0.86	3	0.09	4.114	0.034	0.118	0.004
109.5	0.89	3	0.09	4.311	0.035	0.118	0.004
114.5	0.92	3	0.09	4.508	0.036	0.118	0.004
119.5	0.96	3	0.09	4.705	0.038	0.118	0.004
124.5	0.99	3	0.09	4.902	0.039	0.118	0.004
129.5	1.02	3	0.09	5.098	0.04	0.118	0.004
134.5	1.06	3	0.09	5.295	0.042	0.118	0.004
139.5	1.09	3	0.09	5.492	0.043	0.118	0.004
144.5	1.12	3	0.09	5.689	0.044	0.118	0.004
149.5	1.16	3	0.09	5.886	0.046	0.118	0.004
154.5	1.19	3	0.09	6.083	0.047	0.118	0.004
159.5	1.22	3	0.09	6.280	0.048	0.118	0.004
164.5	1.26	3	0.09	6.476	0.05	0.118	0.004
169.5	1.29	3	0.09	6.673	0.051	0.118	0.004
174.5	1.32	3	0.09	6.870	0.052	0.118	0.004

Compound information available on pages 20-37.

Surface Finish: ISO 4287 & Chamfer Information on pages 7-9.
For ISO tolerance charts, refer to pages 12-13.

MFPSEALS
www.mfpseals.com

Metric O-Ring Sizes - BS4518

Measurements In Millimeters				Measurements In Inches			
ID	±	CS	±	ID	±	CS	±
3 MM - CROSS SECTION							
179.5	1.36	3	0.09	7.067	0.054	0.118	0.004
184.5	1.39	3	0.09	7.264	0.055	0.118	0.004
189.5	1.42	3	0.09	7.461	0.056	0.118	0.004
194.5	1.45	3	0.09	7.657	0.057	0.118	0.004
199.5	1.49	3	0.09	7.854	0.059	0.118	0.004
209.5	1.55	3	0.09	8.248	0.061	0.118	0.004
219.5	1.62	3	0.09	8.642	0.064	0.118	0.004
229.5	1.68	3	0.09	9.035	0.066	0.118	0.004
239.5	1.75	3	0.09	9.429	0.069	0.118	0.004
244.5	1.78	3	0.09	9.626	0.07	0.118	0.004
249.5	1.81	3	0.09	9.823	0.071	0.118	0.004
5.7 MM - CROSS SECTION							
44.3	0.44	5.7	0.13	1.744	0.017	0.224	0.005
45.3	0.45	5.7	0.13	1.783	0.018	0.224	0.005
49.5	0.48	5.7	0.13	1.949	0.019	0.224	0.005
52.3	0.5	5.7	0.13	2.059	0.02	0.224	0.005
54.3	0.51	5.7	0.13	2.138	0.02	0.224	0.005
55.3	0.52	5.7	0.13	2.177	0.02	0.224	0.005
59.3	0.55	5.7	0.13	2.335	0.022	0.224	0.005
62.3	0.57	5.7	0.13	2.453	0.022	0.224	0.005
64.3	0.58	5.7	0.13	2.531	0.023	0.224	0.005
69.3	0.61	5.7	0.13	2.728	0.024	0.224	0.005
74.3	0.65	5.7	0.13	2.925	0.026	0.224	0.005
79.3	0.68	5.7	0.13	3.122	0.027	0.224	0.005
84.3	0.72	5.7	0.13	3.319	0.028	0.224	0.005
89.3	0.75	5.7	0.13	3.516	0.03	0.224	0.005
94.3	0.79	5.7	0.13	3.713	0.031	0.224	0.005
99.3	0.82	5.7	0.13	3.909	0.032	0.224	0.005
104.3	0.85	5.7	0.13	4.106	0.033	0.224	0.005
109.3	0.89	5.7	0.13	4.303	0.035	0.224	0.005
114.3	0.92	5.7	0.13	4.500	0.036	0.224	0.005
119.3	0.96	5.7	0.13	4.697	0.038	0.224	0.005
124.3	0.99	5.7	0.13	4.894	0.039	0.224	0.005
129.3	1.02	5.7	0.13	5.091	0.04	0.224	0.005
134.3	1.06	5.7	0.13	5.287	0.042	0.224	0.005
139.3	1.09	5.7	0.13	5.484	0.043	0.224	0.005
144.3	1.12	5.7	0.13	5.681	0.044	0.224	0.005
149.3	1.16	5.7	0.13	5.878	0.046	0.224	0.005
154.3	1.19	5.7	0.13	6.075	0.047	0.224	0.005
159.3	1.22	5.7	0.13	6.272	0.048	0.224	0.005
164.3	1.26	5.7	0.13	6.468	0.05	0.224	0.005
169.3	1.29	5.7	0.13	6.665	0.051	0.224	0.005
174.3	1.32	5.7	0.13	6.862	0.052	0.224	0.005
179.3	1.35	5.7	0.13	7.059	0.053	0.224	0.005
184.3	1.39	5.7	0.13	7.256	0.055	0.224	0.005
189.3	1.42	5.7	0.13	7.453	0.056	0.224	0.005
194.3	1.45	5.7	0.13	7.650	0.057	0.224	0.005
199.3	1.49	5.7	0.13	7.846	0.059	0.224	0.005
209.3	1.55	5.7	0.13	8.240	0.061	0.224	0.005
219.3	1.62	5.7	0.13	8.634	0.064	0.224	0.005
229.3	1.68	5.7	0.13	9.028	0.066	0.224	0.005
239.3	1.75	5.7	0.13	9.421	0.069	0.224	0.005
249.3	1.81	5.7	0.13	9.815	0.071	0.224	0.005
259.3	1.88	5.7	0.13	10.209	0.074	0.224	0.005
269.3	1.94	5.7	0.13	10.602	0.076	0.224	0.005
279.3	2.01	5.7	0.13	10.996	0.079	0.224	0.005
289.3	2.07	5.7	0.13	11.390	0.081	0.224	0.005
299.3	2.14	5.7	0.13	11.783	0.084	0.224	0.005
309.3	2.2	5.7	0.13	12.177	0.087	0.224	0.005

Measurements In Millimeters				Measurements In Inches			
ID	±	CS	±	ID	±	CS	±
5.7 MM - CROSS SECTION							
319.3	2.26	5.7	0.13	12.571	0.089	0.224	0.005
339.3	2.39	5.7	0.13	13.358	0.094	0.224	0.005
359.3	2.52	5.7	0.13	14.146	0.099	0.224	0.005
379.3	2.65	5.7	0.13	14.933	0.104	0.224	0.005
389.3	2.71	5.7	0.13	15.327	0.107	0.224	0.005
399.3	2.77	5.7	0.13	15.720	0.109	0.224	0.005
419.3	2.9	5.7	0.13	16.508	0.114	0.224	0.005
439.3	3.03	5.7	0.13	17.295	0.119	0.224	0.005
459.3	3.15	5.7	0.13	18.083	0.124	0.224	0.005
479.3	3.28	5.7	0.13	18.870	0.129	0.224	0.005
489.3	3.34	5.7	0.13	19.264	0.131	0.224	0.005
499.3	3.4	5.7	0.13	19.657	0.134	0.224	0.005
8.4 MM - CROSS SECTION							
144.1	1.12	8.4	0.15	5.673	0.044	0.331	0.006
149.1	1.15	8.4	0.15	5.870	0.045	0.331	0.006
154.1	1.19	8.4	0.15	6.067	0.047	0.331	0.006
159.1	1.22	8.4	0.15	6.264	0.048	0.331	0.006
164.1	1.25	8.4	0.15	6.461	0.049	0.331	0.006
169.1	1.29	8.4	0.15	6.657	0.051	0.331	0.006
174.1	1.32	8.4	0.15	6.854	0.052	0.331	0.006
179.1	1.35	8.4	0.15	7.051	0.053	0.331	0.006
184.1	1.39	8.4	0.15	7.248	0.055	0.331	0.006
189.1	1.42	8.4	0.15	7.445	0.056	0.331	0.006
194.1	1.45	8.4	0.15	7.642	0.057	0.331	0.006
199.1	1.49	8.4	0.15	7.839	0.059	0.331	0.006
209.1	1.55	8.4	0.15	8.232	0.061	0.331	0.006
219.1	1.62	8.4	0.15	8.626	0.064	0.331	0.006
229.1	1.68	8.4	0.15	9.020	0.066	0.331	0.006
239.1	1.75	8.4	0.15	9.413	0.069	0.331	0.006
249.1	1.81	8.4	0.15	9.807	0.071	0.331	0.006

Surface Finish: ISO 4287 & Chamfer Information on pages 7-9.
For ISO tolerance charts, refer to pages 12-13.

Compound information available on pages 20-37.

Metric O-Ring Sizes - GB/T 3452.1

MFPSEALS
www.mfpseals.com

Measurements In Millimeters				Measurements In Inches			
ID	±	CS	±	ID	±	CS	±
1.80 MM - CROSS SECTION							
1.80	0.13	1.80	0.08	0.071	0.005	0.071	0.003
2.00	0.13	1.80	0.08	0.079	0.005	0.071	0.003
2.24	0.13	1.80	0.08	0.088	0.005	0.071	0.003
2.50	0.13	1.80	0.08	0.098	0.005	0.071	0.003
2.80	0.13	1.80	0.08	0.110	0.005	0.071	0.003
3.15	0.14	1.80	0.08	0.124	0.006	0.071	0.003
3.55	0.14	1.80	0.08	0.140	0.006	0.071	0.003
3.75	0.14	1.80	0.08	0.148	0.006	0.071	0.003
4.00	0.14	1.80	0.08	0.157	0.006	0.071	0.003
4.50	0.15	1.80	0.08	0.177	0.006	0.071	0.003
4.75	0.15	1.80	0.08	0.187	0.006	0.071	0.003
4.87	0.15	1.80	0.08	0.192	0.006	0.071	0.003
5.00	0.15	1.80	0.08	0.197	0.006	0.071	0.003
5.15	0.15	1.80	0.08	0.203	0.006	0.071	0.003
5.30	0.15	1.80	0.08	0.209	0.006	0.071	0.003
5.60	0.16	1.80	0.08	0.220	0.006	0.071	0.003
6.00	0.16	1.80	0.08	0.236	0.006	0.071	0.003
6.30	0.16	1.80	0.08	0.248	0.006	0.071	0.003
6.70	0.16	1.80	0.08	0.264	0.006	0.071	0.003
6.90	0.17	1.80	0.08	0.272	0.007	0.071	0.003
7.10	0.17	1.80	0.08	0.280	0.007	0.071	0.003
7.50	0.17	1.80	0.08	0.295	0.007	0.071	0.003
8.00	0.17	1.80	0.08	0.315	0.007	0.071	0.003
8.50	0.18	1.80	0.08	0.335	0.007	0.071	0.003
8.75	0.18	1.80	0.08	0.344	0.007	0.071	0.003
9.00	0.18	1.80	0.08	0.354	0.007	0.071	0.003
9.50	0.19	1.80	0.08	0.374	0.007	0.071	0.003
9.75	0.19	1.80	0.08	0.384	0.007	0.071	0.003
10.00	0.19	1.80	0.08	0.394	0.007	0.071	0.003
10.60	0.19	1.80	0.08	0.417	0.007	0.071	0.003
11.20	0.20	1.80	0.08	0.441	0.008	0.071	0.003
11.60	0.20	1.80	0.08	0.457	0.008	0.071	0.003
11.80	0.20	1.80	0.08	0.465	0.008	0.071	0.003
12.10	0.21	1.80	0.08	0.476	0.008	0.071	0.003
12.50	0.21	1.80	0.08	0.492	0.008	0.071	0.003
12.80	0.21	1.80	0.08	0.504	0.008	0.071	0.003
13.20	0.21	1.80	0.08	0.520	0.008	0.071	0.003
14.00	0.22	1.80	0.08	0.551	0.009	0.071	0.003
14.50	0.22	1.80	0.08	0.571	0.009	0.071	0.003
15.00	0.23	1.80	0.08	0.591	0.009	0.071	0.003
15.50	0.23	1.80	0.08	0.610	0.009	0.071	0.003
16.00	0.24	1.80	0.08	0.630	0.009	0.071	0.003
17.00	0.24	1.80	0.08	0.669	0.009	0.071	0.003
18.00	0.25	1.80	0.08	0.709	0.010	0.071	0.003
19.00	0.26	1.80	0.08	0.748	0.010	0.071	0.003
20.00	0.26	1.80	0.08	0.787	0.010	0.071	0.003
20.60	0.27	1.80	0.08	0.811	0.011	0.071	0.003
21.20	0.27	1.80	0.08	0.835	0.011	0.071	0.003
22.40	0.28	1.80	0.08	0.882	0.011	0.071	0.003
23.00	0.29	1.80	0.08	0.906	0.011	0.071	0.003
23.60	0.29	1.80	0.08	0.929	0.011	0.071	0.003
24.30	0.30	1.80	0.08	0.957	0.012	0.071	0.003
25.00	0.30	1.80	0.08	0.984	0.012	0.071	0.003
25.80	0.31	1.80	0.08	1.016	0.012	0.071	0.003
26.50	0.31	1.80	0.08	1.043	0.012	0.071	0.003
27.30	0.32	1.80	0.08	1.075	0.013	0.071	0.003
28.00	0.32	1.80	0.08	1.102	0.013	0.071	0.003
29.00	0.33	1.80	0.08	1.142	0.013	0.071	0.003
30.00	0.34	1.80	0.08	1.181	0.013	0.071	0.003
31.50	0.35	1.80	0.08	1.240	0.014	0.071	0.003
32.50	0.36	1.80	0.08	1.280	0.014	0.071	0.003
33.50	0.36	1.80	0.08	1.319	0.014	0.071	0.003
34.50	0.37	1.80	0.08	1.358	0.015	0.071	0.003

Measurements In Millimeters				Measurements In Inches			
ID	±	CS	±	ID	±	CS	±
1.80 MM - CROSS SECTION							
35.50	0.38	1.80	0.08	1.398	0.015	0.071	0.003
36.50	0.38	1.80	0.08	1.437	0.015	0.071	0.003
37.50	0.39	1.80	0.08	1.476	0.015	0.071	0.003
38.70	0.40	1.80	0.08	1.524	0.016	0.071	0.003
40.00	0.41	1.80	0.08	1.575	0.016	0.071	0.003
41.20	0.42	1.80	0.08	1.622	0.017	0.071	0.003
42.50	0.43	1.80	0.08	1.673	0.017	0.071	0.003
43.70	0.44	1.80	0.08	1.720	0.017	0.071	0.003
45.00	0.44	1.80	0.08	1.772	0.017	0.071	0.003
46.20	0.45	1.80	0.08	1.819	0.018	0.071	0.003
47.50	0.46	1.80	0.08	1.870	0.018	0.071	0.003
48.70	0.47	1.80	0.08	1.917	0.019	0.071	0.003
50.00	0.48	1.80	0.08	1.969	0.019	0.071	0.003
2.65 MM - CROSS SECTION							
4.50	0.15	2.65	0.09	0.177	0.006	0.104	0.004
5.30	0.15	2.65	0.09	0.209	0.006	0.104	0.004
6.00	0.16	2.65	0.09	0.236	0.006	0.104	0.004
6.90	0.17	2.65	0.09	0.272	0.007	0.104	0.004
8.00	0.17	2.65	0.09	0.315	0.007	0.104	0.004
9.00	0.18	2.65	0.09	0.354	0.007	0.104	0.004
9.50	0.19	2.65	0.09	0.374	0.007	0.104	0.004
10.00	0.19	2.65	0.09	0.394	0.007	0.104	0.004
10.60	0.19	2.65	0.09	0.417	0.007	0.104	0.004
11.20	0.20	2.65	0.09	0.441	0.008	0.104	0.004
11.60	0.20	2.65	0.09	0.457	0.008	0.104	0.004
11.80	0.20	2.65	0.09	0.465	0.008	0.104	0.004
12.10	0.21	2.65	0.09	0.476	0.008	0.104	0.004
12.50	0.21	2.65	0.09	0.492	0.008	0.104	0.004
12.80	0.21	2.65	0.09	0.504	0.008	0.104	0.004
13.20	0.21	2.65	0.09	0.520	0.008	0.104	0.004
14.00	0.22	2.65	0.09	0.551	0.009	0.104	0.004
14.50	0.22	2.65	0.09	0.571	0.009	0.104	0.004
15.00	0.23	2.65	0.09	0.591	0.009	0.104	0.004
15.50	0.23	2.65	0.09	0.610	0.009	0.104	0.004
16.00	0.24	2.65	0.09	0.630	0.009	0.104	0.004
17.00	0.24	2.65	0.09	0.669	0.009	0.104	0.004
18.00	0.25	2.65	0.09	0.709	0.010	0.104	0.004
19.00	0.26	2.65	0.09	0.748	0.010	0.104	0.004
20.00	0.26	2.65	0.09	0.787	0.010	0.104	0.004
20.60	0.27	2.65	0.09	0.811	0.011	0.104	0.004
21.20	0.27	2.65	0.09	0.835	0.011	0.104	0.004
22.40	0.28	2.65	0.09	0.882	0.011	0.104	0.004
23.00	0.29	2.65	0.09	0.906	0.011	0.104	0.004
23.60	0.29	2.65	0.09	0.929	0.011	0.104	0.004
24.30	0.30	2.65	0.09	0.957	0.012	0.104	0.004
25.00	0.30	2.65	0.09	0.984	0.012	0.104	0.004
25.80	0.31	2.65	0.09	1.016	0.012	0.104	0.004
26.50	0.31	2.65	0.09	1.043	0.012	0.104	0.004
27.30	0.32	2.65	0.09	1.075	0.013	0.104	0.004
28.00	0.32	2.65	0.09	1.102	0.013	0.104	0.004
29.00	0.33	2.65	0.09	1.142	0.013	0.104	0.004
30.00	0.34	2.65	0.09	1.181	0.013	0.104	0.004
31.50	0.35	2.65	0.09	1.240	0.014	0.104	0.004
32.50	0.36	2.65	0.09	1.280	0.014	0.104	0.004
33.50	0.36	2.65	0.09	1.319	0.014	0.104	0.004
34.50	0.37	2.65	0.09	1.358	0.015	0.104	0.004
35.50	0.38	2.65	0.09	1.398	0.015	0.104	0.004
36.50	0.38	2.65	0.09	1.437	0.015	0.104	0.004
37.50	0.39	2.65	0.09	1.476	0.015	0.104	0.004
38.70	0.40	2.65	0.09	1.524	0.016	0.104	0.004
40.00	0.41	2.65	0.09	1.575	0.016	0.104	0.004
41.20	0.42	2.65	0.09	1.622	0.017	0.104	0.004

Compound information available on pages 20-37.

Surface Finish: ISO 4287 & Chamfer Information on pages 7-9.
For ISO tolerance charts, refer to pages 12-13.

MFPSEALS®
www.mfpseals.com

Metric O-Ring Sizes - GB/T 3452.1

Measurements In Millimeters				Measurements In Inches			
ID	±	CS	±	ID	±	CS	±
2.65 MM - CROSS SECTION							
42.50	0.43	2.65	0.09	1.673	0.017	0.104	0.004
43.70	0.44	2.65	0.09	1.720	0.017	0.104	0.004
45.00	0.44	2.65	0.09	1.772	0.017	0.104	0.004
46.20	0.45	2.65	0.09	1.819	0.018	0.104	0.004
47.50	0.46	2.65	0.09	1.870	0.018	0.104	0.004
48.70	0.47	2.65	0.09	1.917	0.019	0.104	0.004
50.00	0.48	2.65	0.09	1.969	0.019	0.104	0.004
51.50	0.49	2.65	0.09	2.028	0.019	0.104	0.004
53.00	0.50	2.65	0.09	2.087	0.020	0.104	0.004
54.50	0.51	2.65	0.09	2.146	0.020	0.104	0.004
56.00	0.52	2.65	0.09	2.205	0.020	0.104	0.004
58.00	0.54	2.65	0.09	2.283	0.021	0.104	0.004
60.00	0.55	2.65	0.09	2.362	0.022	0.104	0.004
61.50	0.56	2.65	0.09	2.421	0.022	0.104	0.004
63.00	0.57	2.65	0.09	2.480	0.022	0.104	0.004
65.00	0.58	2.65	0.09	2.559	0.023	0.104	0.004
67.00	0.60	2.65	0.09	2.638	0.024	0.104	0.004
69.00	0.61	2.65	0.09	2.717	0.024	0.104	0.004
71.00	0.63	2.65	0.09	2.795	0.025	0.104	0.004
73.00	0.64	2.65	0.09	2.874	0.025	0.104	0.004
75.00	0.65	2.65	0.09	2.953	0.026	0.104	0.004
77.50	0.67	2.65	0.09	3.051	0.026	0.104	0.004
80.00	0.69	2.65	0.09	3.150	0.027	0.104	0.004
82.50	0.71	2.65	0.09	3.248	0.028	0.104	0.004
85.00	0.72	2.65	0.09	3.346	0.028	0.104	0.004
87.50	0.74	2.65	0.09	3.445	0.029	0.104	0.004
90.00	0.76	2.65	0.09	3.543	0.030	0.104	0.004
92.50	0.77	2.65	0.09	3.642	0.030	0.104	0.004
95.00	0.79	2.65	0.09	3.740	0.031	0.104	0.004
97.50	0.81	2.65	0.09	3.839	0.032	0.104	0.004
100.00	0.82	2.65	0.09	3.937	0.032	0.104	0.004
103.00	0.85	2.65	0.09	4.055	0.033	0.104	0.004
106.00	0.87	2.65	0.09	4.173	0.034	0.104	0.004
109.00	0.89	2.65	0.09	4.291	0.035	0.104	0.004
112.00	0.91	2.65	0.09	4.409	0.036	0.104	0.004
115.00	0.93	2.65	0.09	4.528	0.037	0.104	0.004
118.00	0.95	2.65	0.09	4.646	0.037	0.104	0.004
122.00	0.97	2.65	0.09	4.803	0.038	0.104	0.004
125.00	0.99	2.65	0.09	4.921	0.039	0.104	0.004
128.00	1.01	2.65	0.09	5.039	0.040	0.104	0.004
132.00	1.04	2.65	0.09	5.197	0.041	0.104	0.004
136.00	1.07	2.65	0.09	5.354	0.042	0.104	0.004
140.00	1.09	2.65	0.09	5.512	0.043	0.104	0.004
142.50	1.11	2.65	0.09	5.610	0.044	0.104	0.004
145.00	1.13	2.65	0.09	5.709	0.044	0.104	0.004
147.50	1.14	2.65	0.09	5.807	0.045	0.104	0.004
150.00	1.16	2.65	0.09	5.906	0.046	0.104	0.004
152.50	1.18	2.65	0.09	6.004	0.046	0.104	0.004
3.55 MM - CROSS SECTION							
18.00	0.25	3.55	0.10	0.709	0.010	0.140	0.004
19.00	0.26	3.55	0.10	0.748	0.010	0.140	0.004
20.00	0.26	3.55	0.10	0.787	0.010	0.140	0.004
20.60	0.27	3.55	0.10	0.811	0.011	0.140	0.004
21.20	0.27	3.55	0.10	0.835	0.011	0.140	0.004
22.40	0.28	3.55	0.10	0.882	0.011	0.140	0.004
23.00	0.29	3.55	0.10	0.906	0.011	0.140	0.004
23.60	0.29	3.55	0.10	0.929	0.011	0.140	0.004
24.30	0.30	3.55	0.10	0.957	0.012	0.140	0.004
25.00	0.30	3.55	0.10	0.984	0.012	0.140	0.004
25.80	0.31	3.55	0.10	1.016	0.012	0.140	0.004
26.50	0.31	3.55	0.10	1.043	0.012	0.140	0.004
27.30	0.32	3.55	0.10	1.075	0.013	0.140	0.004

Measurements In Millimeters				Measurements In Inches			
ID	±	CS	±	ID	±	CS	±
3.55 MM - CROSS SECTION							
28.00	0.32	3.55	0.10	1.102	0.013	0.140	0.004
29.00	0.33	3.55	0.10	1.142	0.013	0.140	0.004
30.00	0.34	3.55	0.10	1.181	0.013	0.140	0.004
31.50	0.35	3.55	0.10	1.240	0.014	0.140	0.004
32.50	0.36	3.55	0.10	1.280	0.014	0.140	0.004
33.50	0.36	3.55	0.10	1.319	0.014	0.140	0.004
34.50	0.37	3.55	0.10	1.358	0.015	0.140	0.004
35.50	0.38	3.55	0.10	1.398	0.015	0.140	0.004
36.50	0.38	3.55	0.10	1.437	0.015	0.140	0.004
37.50	0.39	3.55	0.10	1.476	0.015	0.140	0.004
38.70	0.40	3.55	0.10	1.524	0.016	0.140	0.004
40.00	0.41	3.55	0.10	1.575	0.016	0.140	0.004
41.20	0.42	3.55	0.10	1.622	0.017	0.140	0.004
42.50	0.43	3.55	0.10	1.673	0.017	0.140	0.004
43.70	0.44	3.55	0.10	1.720	0.017	0.140	0.004
45.00	0.44	3.55	0.10	1.772	0.017	0.140	0.004
46.20	0.45	3.55	0.10	1.819	0.018	0.140	0.004
47.50	0.46	3.55	0.10	1.870	0.018	0.140	0.004
48.70	0.47	3.55	0.10	1.917	0.019	0.140	0.004
50.00	0.48	3.55	0.10	1.969	0.019	0.140	0.004
51.50	0.49	3.55	0.10	2.028	0.019	0.140	0.004
53.00	0.50	3.55	0.10	2.087	0.020	0.140	0.004
54.50	0.51	3.55	0.10	2.146	0.020	0.140	0.004
56.00	0.52	3.55	0.10	2.205	0.020	0.140	0.004
58.00	0.54	3.55	0.10	2.283	0.021	0.140	0.004
60.00	0.55	3.55	0.10	2.362	0.022	0.140	0.004
61.50	0.56	3.55	0.10	2.421	0.022	0.140	0.004
63.00	0.57	3.55	0.10	2.480	0.022	0.140	0.004
65.00	0.58	3.55	0.10	2.559	0.023	0.140	0.004
67.00	0.60	3.55	0.10	2.638	0.024	0.140	0.004
69.00	0.61	3.55	0.10	2.717	0.024	0.140	0.004
71.00	0.63	3.55	0.10	2.795	0.025	0.140	0.004
73.00	0.64	3.55	0.10	2.874	0.025	0.140	0.004
75.00	0.65	3.55	0.10	2.953	0.026	0.140	0.004
77.50	0.67	3.55	0.10	3.051	0.026	0.140	0.004
80.00	0.69	3.55	0.10	3.150	0.027	0.140	0.004
82.50	0.71	3.55	0.10	3.248	0.028	0.140	0.004
85.00	0.72	3.55	0.10	3.346	0.028	0.140	0.004
87.50	0.74	3.55	0.10	3.445	0.029	0.140	0.004
90.00	0.76	3.55	0.10	3.543	0.030	0.140	0.004
92.50	0.77	3.55	0.10	3.642	0.030	0.140	0.004
95.00	0.79	3.55	0.10	3.740	0.031	0.140	0.004
97.50	0.81	3.55	0.10	3.839	0.032	0.140	0.004
100.00	0.82	3.55	0.10	3.937	0.032	0.140	0.004
103.00	0.85	3.55	0.10	4.055	0.033	0.140	0.004
106.00	0.87	3.55	0.10	4.173	0.034	0.140	0.004
109.00	0.89	3.55	0.10	4.291	0.035	0.140	0.004
112.00	0.91	3.55	0.10	4.409	0.036	0.140	0.004
115.00	0.93	3.55	0.10	4.528	0.037	0.140	0.004
118.00	0.95	3.55	0.10	4.646	0.037	0.140	0.004
122.00	0.97	3.55	0.10	4.803	0.038	0.140	0.004
125.00	0.99	3.55	0.10	4.921	0.039	0.140	0.004
128.00	1.01	3.55	0.10	5.039	0.040	0.140	0.004
132.00	1.04	3.55	0.10	5.197	0.041	0.140	0.004
136.00	1.07	3.55	0.10	5.354	0.042	0.140	0.004
140.00	1.09	3.55	0.10	5.512	0.043	0.140	0.004
142.50	1.11	3.55	0.10	5.610	0.044	0.140	0.004
145.00	1.13	3.55	0.10	5.709	0.044	0.140	0.004
147.50	1.14	3.55	0.10	5.807	0.045	0.140	0.004
150.00	1.16	3.55	0.10	5.906	0.046	0.140	0.004
152.50	1.18	3.55	0.10	6.004	0.046	0.140	0.004
155.00	1.19	3.55	0.10	6.102	0.047	0.140	0.004
157.50	1.21	3.55	0.10	6.201	0.048	0.140	0.004

Surface Finish: ISO 4287 & Chamfer Information on pages 7-9.
For ISO tolerance charts, refer to pages 12-13.

Compound information available on pages 20-37.

Metric O-Ring Sizes - GB/T 3452.1

MFPSEALS
www.mfpseals.com

Measurements In Millimeters				Measurements In Inches			
ID	±	CS	±	ID	±	CS	±
3.55 MM - CROSS SECTION							
160.00	1.23	3.55	0.10	6.299	0.048	0.140	0.004
162.50	1.24	3.55	0.10	6.398	0.049	0.140	0.004
165.00	1.26	3.55	0.10	6.496	0.050	0.140	0.004
167.50	1.28	3.55	0.10	6.594	0.050	0.140	0.004
170.00	1.29	3.55	0.10	6.693	0.051	0.140	0.004
172.50	1.31	3.55	0.10	6.791	0.052	0.140	0.004
175.00	1.33	3.55	0.10	6.890	0.052	0.140	0.004
177.50	1.34	3.55	0.10	6.988	0.053	0.140	0.004
180.00	1.36	3.55	0.10	7.087	0.054	0.140	0.004
182.50	1.38	3.55	0.10	7.185	0.054	0.140	0.004
185.00	1.39	3.55	0.10	7.283	0.055	0.140	0.004
187.50	1.41	3.55	0.10	7.382	0.056	0.140	0.004
190.00	1.43	3.55	0.10	7.480	0.056	0.140	0.004
195.00	1.46	3.55	0.10	7.677	0.057	0.140	0.004
200.00	1.49	3.55	0.10	7.874	0.059	0.140	0.004
5.30 MM - CROSS SECTION							
40.00	0.41	5.30	0.13	1.575	0.016	0.209	0.005
41.20	0.42	5.30	0.13	1.622	0.017	0.209	0.005
42.50	0.43	5.30	0.13	1.673	0.017	0.209	0.005
43.70	0.44	5.30	0.13	1.720	0.017	0.209	0.005
45.00	0.44	5.30	0.13	1.772	0.017	0.209	0.005
46.20	0.45	5.30	0.13	1.819	0.018	0.209	0.005
47.50	0.46	5.30	0.13	1.870	0.018	0.209	0.005
48.70	0.47	5.30	0.13	1.917	0.019	0.209	0.005
50.00	0.48	5.30	0.13	1.969	0.019	0.209	0.005
51.50	0.49	5.30	0.13	2.028	0.019	0.209	0.005
53.00	0.50	5.30	0.13	2.087	0.020	0.209	0.005
54.50	0.51	5.30	0.13	2.146	0.020	0.209	0.005
56.00	0.52	5.30	0.13	2.205	0.020	0.209	0.005
58.00	0.54	5.30	0.13	2.283	0.021	0.209	0.005
60.00	0.55	5.30	0.13	2.362	0.022	0.209	0.005
61.50	0.56	5.30	0.13	2.421	0.022	0.209	0.005
63.00	0.57	5.30	0.13	2.480	0.022	0.209	0.005
65.00	0.58	5.30	0.13	2.559	0.023	0.209	0.005
67.00	0.60	5.30	0.13	2.638	0.024	0.209	0.005
69.00	0.61	5.30	0.13	2.717	0.024	0.209	0.005
71.00	0.63	5.30	0.13	2.795	0.025	0.209	0.005
73.00	0.64	5.30	0.13	2.874	0.025	0.209	0.005
75.00	0.65	5.30	0.13	2.953	0.026	0.209	0.005
77.50	0.67	5.30	0.13	3.051	0.026	0.209	0.005
80.00	0.69	5.30	0.13	3.150	0.027	0.209	0.005
82.50	0.71	5.30	0.13	3.248	0.028	0.209	0.005
85.00	0.72	5.30	0.13	3.346	0.028	0.209	0.005
87.50	0.74	5.30	0.13	3.445	0.029	0.209	0.005
90.00	0.76	5.30	0.13	3.543	0.030	0.209	0.005
92.50	0.77	5.30	0.13	3.642	0.030	0.209	0.005
95.00	0.79	5.30	0.13	3.740	0.031	0.209	0.005
97.50	0.81	5.30	0.13	3.839	0.032	0.209	0.005
100.00	0.82	5.30	0.13	3.937	0.032	0.209	0.005
103.00	0.85	5.30	0.13	4.055	0.033	0.209	0.005
106.00	0.87	5.30	0.13	4.173	0.034	0.209	0.005
109.00	0.89	5.30	0.13	4.291	0.035	0.209	0.005
112.00	0.91	5.30	0.13	4.409	0.036	0.209	0.005
115.00	0.93	5.30	0.13	4.528	0.037	0.209	0.005
118.00	0.95	5.30	0.13	4.646	0.037	0.209	0.005
122.00	0.97	5.30	0.13	4.803	0.038	0.209	0.005
125.00	0.99	5.30	0.13	4.921	0.039	0.209	0.005
128.00	1.01	5.30	0.13	5.039	0.040	0.209	0.005
132.00	1.04	5.30	0.13	5.197	0.041	0.209	0.005
136.00	1.07	5.30	0.13	5.354	0.042	0.209	0.005
140.00	1.09	5.30	0.13	5.512	0.043	0.209	0.005
142.50	1.11	5.30	0.13	5.610	0.044	0.209	0.005

Measurements In Millimeters				Measurements In Inches			
ID	±	CS	±	ID	±	CS	±
5.30 MM - CROSS SECTION							
145.00	1.13	5.30	0.13	5.709	0.044	0.209	0.005
147.50	1.14	5.30	0.13	5.807	0.045	0.209	0.005
150.00	1.16	5.30	0.13	5.906	0.046	0.209	0.005
152.50	1.18	5.30	0.13	6.004	0.046	0.209	0.005
155.00	1.19	5.30	0.13	6.102	0.047	0.209	0.005
157.50	1.21	5.30	0.13	6.201	0.048	0.209	0.005
160.00	1.23	5.30	0.13	6.299	0.048	0.209	0.005
162.50	1.24	5.30	0.13	6.398	0.049	0.209	0.005
165.00	1.26	5.30	0.13	6.496	0.050	0.209	0.005
167.50	1.28	5.30	0.13	6.594	0.050	0.209	0.005
170.00	1.29	5.30	0.13	6.693	0.051	0.209	0.005
172.50	1.31	5.30	0.13	6.791	0.052	0.209	0.005
175.00	1.33	5.30	0.13	6.890	0.052	0.209	0.005
177.50	1.34	5.30	0.13	6.988	0.053	0.209	0.005
180.00	1.36	5.30	0.13	7.087	0.054	0.209	0.005
182.50	1.38	5.30	0.13	7.185	0.054	0.209	0.005
185.00	1.39	5.30	0.13	7.283	0.055	0.209	0.005
187.50	1.41	5.30	0.13	7.382	0.056	0.209	0.005
190.00	1.43	5.30	0.13	7.480	0.056	0.209	0.005
195.00	1.46	5.30	0.13	7.677	0.057	0.209	0.005
200.00	1.49	5.30	0.13	7.874	0.059	0.209	0.005
203.00	1.51	5.30	0.13	7.992	0.059	0.209	0.005
206.00	1.53	5.30	0.13	8.110	0.060	0.209	0.005
212.00	1.57	5.30	0.13	8.346	0.062	0.209	0.005
218.00	1.61	5.30	0.13	8.583	0.063	0.209	0.005
224.00	1.65	5.30	0.13	8.819	0.065	0.209	0.005
227.00	1.67	5.30	0.13	8.937	0.066	0.209	0.005
230.00	1.69	5.30	0.13	9.0 55	0.067	0.209	0.005
236.00	1.73	5.30	0.13	9.291	0.068	0.209	0.005
239.00	1.75	5.30	0.13	9.409	0.069	0.209	0.005
243.00	1.77	5.30	0.13	9.567	0.070	0.209	0.005
250.00	1.82	5.30	0.13	9.843	0.072	0.209	0.005
254.00	1.84	5.30	0.13	10.000	0.072	0.209	0.005
258.00	1.87	5.30	0.13	10.157	0.074	0.209	0.005
261.00	1.89	5.30	0.13	10.276	0.074	0.209	0.005
265.00	1.91	5.30	0.13	10.433	0.075	0.209	0.005
268.00	1.93	5.30	0.13	10.551	0.076	0.209	0.005
272.00	1.96	5.30	0.13	10.709	0.077	0.209	0.005
276.00	1.99	5.30	0.13	10.866	0.078	0.209	0.005
280.00	2.01	5.30	0.13	11.024	0.079	0.209	0.005
283.00	2.03	5.30	0.13	11.142	0.080	0.209	0.005
286.00	2.05	5.30	0.13	11.260	0.081	0.209	0.005
290.00	2.08	5.30	0.13	11.417	0.082	0.209	0.005
295.00	2.11	5.30	0.13	11.614	0.083	0.209	0.005
300.00	2.14	5.30	0.13	11.811	0.084	0.209	0.005
303.00	2.16	5.30	0.13	11.929	0.085	0.209	0.005
307.00	2.19	5.30	0.13	12.087	0.086	0.209	0.005
311.00	2.21	5.30	0.13	12.244	0.087	0.209	0.005
315.00	2.24	5.30	0.13	12.402	0.088	0.209	0.005
320.00	2.27	5.30	0.13	12.598	0.089	0.209	0.005
325.00	2.30	5.30	0.13	12.795	0.091	0.209	0.005
330.00	2.33	5.30	0.13	12.992	0.092	0.209	0.005
335.00	2.36	5.30	0.13	13.189	0.093	0.209	0.005
340.00	2.40	5.30	0.13	13.386	0.094	0.209	0.005
345.00	2.43	5.30	0.13	13.583	0.096	0.209	0.005
350.00	2.46	5.30	0.13	13.780	0.097	0.209	0.005
355.00	2.49	5.30	0.13	13.976	0.098	0.209	0.005
360.00	2.52	5.30	0.13	14.173	0.099	0.209	0.005
365.00	2.56	5.30	0.13	14.370	0.101	0.209	0.005
370.00	2.59	5.30	0.13	14.567	0.102	0.209	0.005
375.00	2.62	5.30	0.13	14.764	0.103	0.209	0.005
379.00	2.64	5.30	0.13	14.921	0.104	0.209	0.005
383.00	2.67	5.30	0.13	15.079	0.105	0.209	0.005

Compound information available on pages 20-37.

Surface Finish: ISO 4287 & Chamfer Information on pages 7-9.
For ISO tolerance charts, refer to pages 12-13.

MFPSEALS
www.mfpseals.com

Metric O-Ring Sizes - GB/T 3452.1

Measurements In Millimeters				Measurements In Inches			
ID	±	CS	±	ID	±	CS	±
5.30 MM - CROSS SECTION							
387.00	2.70	5.30	0.13	15.236	0.106	0.209	0.005
391.00	2.72	5.30	0.13	15.394	0.107	0.209	0.005
395.00	2.75	5.30	0.13	15.551	0.108	0.209	0.005
400.00	2.78	5.30	0.13	15.748	0.109	0.209	0.005
7.00 MM - CROSS SECTION							
109.00	0.89	7.00	0.15	4.291	0.035	0.276	0.006
112.00	0.91	7.00	0.15	4.409	0.036	0.276	0.006
115.00	0.93	7.00	0.15	4.528	0.037	0.276	0.006
118.00	0.95	7.00	0.15	4.646	0.037	0.276	0.006
122.00	0.97	7.00	0.15	4.803	0.038	0.276	0.006
125.00	0.99	7.00	0.15	4.921	0.039	0.276	0.006
128.00	1.01	7.00	0.15	5.039	0.040	0.276	0.006
132.00	1.04	7.00	0.15	5.197	0.041	0.276	0.006
136.00	1.07	7.00	0.15	5.354	0.042	0.276	0.006
140.00	1.09	7.00	0.15	5.512	0.043	0.276	0.006
142.50	1.11	7.00	0.15	5.610	0.044	0.276	0.006
145.00	1.13	7.00	0.15	5.709	0.044	0.276	0.006
147.50	1.14	7.00	0.15	5.807	0.045	0.276	0.006
150.00	1.16	7.00	0.15	5.906	0.046	0.276	0.006
152.50	1.18	7.00	0.15	6.004	0.046	0.276	0.006
155.00	1.19	7.00	0.15	6.102	0.047	0.276	0.006
157.50	1.21	7.00	0.15	6.201	0.048	0.276	0.006
160.00	1.23	7.00	0.15	6.299	0.048	0.276	0.006
162.50	1.24	7.00	0.15	6.398	0.049	0.276	0.006
165.00	1.26	7.00	0.15	6.496	0.050	0.276	0.006
167.50	1.28	7.00	0.15	6.594	0.050	0.276	0.006
170.00	1.29	7.00	0.15	6.693	0.051	0.276	0.006
172.50	1.31	7.00	0.15	6.791	0.052	0.276	0.006
175.00	1.33	7.00	0.15	6.890	0.052	0.276	0.006
177.50	1.34	7.00	0.15	6.988	0.053	0.276	0.006
180.00	1.36	7.00	0.15	7.087	0.054	0.276	0.006
182.50	1.38	7.00	0.15	7.185	0.054	0.276	0.006
185.00	1.39	7.00	0.15	7.283	0.055	0.276	0.006
187.50	1.41	7.00	0.15	7.382	0.056	0.276	0.006
190.00	1.43	7.00	0.15	7.480	0.056	0.276	0.006
195.00	1.46	7.00	0.15	7.677	0.057	0.276	0.006
200.00	1.49	7.00	0.15	7.874	0.059	0.276	0.006
203.00	1.51	7.00	0.15	7.992	0.059	0.276	0.006
206.00	1.53	7.00	0.15	8.110	0.060	0.276	0.006
212.00	1.57	7.00	0.15	8.346	0.062	0.276	0.006
218.00	1.61	7.00	0.15	8.583	0.063	0.276	0.006
224.00	1.65	7.00	0.15	8.819	0.065	0.276	0.006
227.00	1.67	7.00	0.15	8.937	0.066	0.276	0.006
230.00	1.69	7.00	0.15	9.055	0.067	0.276	0.006
236.00	1.73	7.00	0.15	9.291	0.068	0.276	0.006
239.00	1.75	7.00	0.15	9.409	0.069	0.276	0.006
243.00	1.77	7.00	0.15	9.567	0.070	0.276	0.006
250.00	1.82	7.00	0.15	9.843	0.072	0.276	0.006
254.00	1.84	7.00	0.15	10.000	0.072	0.276	0.006
258.00	1.87	7.00	0.15	10.157	0.074	0.276	0.006
261.00	1.89	7.00	0.15	10.276	0.074	0.276	0.006
265.00	1.91	7.00	0.15	10.433	0.075	0.276	0.006
268.00	1.93	7.00	0.15	10.551	0.076	0.276	0.006
272.00	1.96	7.00	0.15	10.709	0.077	0.276	0.006
276.00	1.99	7.00	0.15	10.866	0.078	0.276	0.006
280.00	2.01	7.00	0.15	11.024	0.079	0.276	0.006
283.00	2.03	7.00	0.15	11.142	0.080	0.276	0.006
286.00	2.05	7.00	0.15	11.260	0.081	0.276	0.006
290.00	2.08	7.00	0.15	11.417	0.082	0.276	0.006
295.00	2.11	7.00	0.15	11.614	0.083	0.276	0.006
300.00	2.14	7.00	0.15	11.811	0.084	0.276	0.006
303.00	2.16	7.00	0.15	11.929	0.085	0.276	0.006

Measurements In Millimeters				Measurements In Inches			
ID	±	CS	±	ID	±	CS	±
7.00 MM - CROSS SECTION							
307.00	2.19	7.00	0.15	12.087	0.086	0.276	0.006
311.00	2.21	7.00	0.15	12.244	0.087	0.276	0.006
315.00	2.24	7.00	0.15	12.402	0.088	0.276	0.006
320.00	2.27	7.00	0.15	12.598	0.089	0.276	0.006
325.00	2.30	7.00	0.15	12.795	0.091	0.276	0.006
330.00	2.33	7.00	0.15	12.992	0.092	0.276	0.006
335.00	2.36	7.00	0.15	13.189	0.093	0.276	0.006
340.00	2.40	7.00	0.15	13.386	0.094	0.276	0.006
345.00	2.43	7.00	0.15	13.583	0.096	0.276	0.006
350.00	2.46	7.00	0.15	13.780	0.097	0.276	0.006
355.00	2.49	7.00	0.15	13.976	0.098	0.276	0.006
360.00	2.52	7.00	0.15	14.173	0.099	0.276	0.006
365.00	2.56	7.00	0.15	14.370	0.101	0.276	0.006
370.00	2.59	7.00	0.15	14.567	0.102	0.276	0.006
375.00	2.62	7.00	0.15	14.764	0.103	0.276	0.006
379.00	2.64	7.00	0.15	14.921	0.104	0.276	0.006
383.00	2.67	7.00	0.15	15.079	0.105	0.276	0.006
387.00	2.70	7.00	0.15	15.236	0.106	0.276	0.006
391.00	2.72	7.00	0.15	15.394	0.107	0.276	0.006
395.00	2.75	7.00	0.15	15.551	0.108	0.276	0.006
400.00	2.78	7.00	0.15	15.748	0.109	0.276	0.006
406.00	2.82	7.00	0.15	15.984	0.111	0.276	0.006
412.00	2.85	7.00	0.15	16.220	0.112	0.276	0.006
418.00	2.89	7.00	0.15	16.457	0.114	0.276	0.006
425.00	2.94	7.00	0.15	16.732	0.116	0.276	0.006
429.00	2.96	7.00	0.15	16.890	0.117	0.276	0.006
433.00	2.99	7.00	0.15	17.047	0.118	0.276	0.006
437.00	3.01	7.00	0.15	17.205	0.119	0.276	0.006
443.00	3.05	7.00	0.15	17.441	0.120	0.276	0.006
450.00	3.09	7.00	0.15	17.717	0.122	0.276	0.006
456.00	3.13	7.00	0.15	17.953	0.123	0.276	0.006
462.00	3.17	7.00	0.15	18.189	0.125	0.276	0.006
466.00	3.19	7.00	0.15	18.346	0.126	0.276	0.006
470.00	3.22	7.00	0.15	18.504	0.127	0.276	0.006
475.00	3.25	7.00	0.15	18.701	0.128	0.276	0.006
479.00	3.28	7.00	0.15	18.858	0.129	0.276	0.006
483.00	3.30	7.00	0.15	19.016	0.130	0.276	0.006
487.00	3.33	7.00	0.15	19.173	0.131	0.276	0.006
493.00	3.36	7.00	0.15	19.409	0.132	0.276	0.006
500.00	3.41	7.00	0.15	19.685	0.134	0.276	0.006
508.00	3.46	7.00	0.15	20.000	0.136	0.276	0.006
515.00	3.50	7.00	0.15	20.276	0.138	0.276	0.006
523.00	3.55	7.00	0.15	20.591	0.140	0.276	0.006
530.00	3.60	7.00	0.15	20.866	0.142	0.276	0.006
538.00	3.65	7.00	0.15	21.181	0.144	0.276	0.006
545.00	3.69	7.00	0.15	21.457	0.145	0.276	0.006
553.00	3.74	7.00	0.15	21.772	0.147	0.276	0.006
560.00	3.78	7.00	0.15	22.047	0.149	0.276	0.006
570.00	3.85	7.00	0.15	22.441	0.152	0.276	0.006
580.00	3.91	7.00	0.15	22.835	0.154	0.276	0.006
590.00	3.97	7.00	0.15	23.228	0.156	0.276	0.006
600.00	4.03	7.00	0.15	23.622	0.159	0.276	0.006
608.00	4.08	7.00	0.15	23.937	0.161	0.276	0.006
615.00	4.12	7.00	0.15	24.213	0.162	0.276	0.006
623.00	4.17	7.00	0.15	24.528	0.164	0.276	0.006
630.00	4.22	7.00	0.15	24.803	0.166	0.276	0.006
640.00	4.28	7.00	0.15	25.197	0.169	0.276	0.006
650.00	4.34	7.00	0.15	25.591	0.171	0.276	0.006
660.00	4.40	7.00	0.15	25.984	0.173	0.276	0.006
670.00	4.47	7.00	0.15	26.378	0.176	0.276	0.006

Surface Finish: ISO 4287 & Chamfer Information on pages 7-9.
For ISO tolerance charts, refer to pages 12-13.

Compound information available on pages 20-37.

Metric O-Ring Sizes - J.I.S. B2401

MFPSEALS
www.mfpseals.com

JIS B 2401	WIDTH		ID	±
P - 3			2.8	0.14
P - 4			3.8	0.14
P - 5			4.8	0.15
P - 6			5.8	0.15
P - 7	1.9	±0.08	6.8	0.16
P - 8			7.8	0.16
P - 9			8.8	0.17
P - 10			9.8	0.17
P - 10A			9.8	0.17
P - 11			10.8	0.18
P - 11.2			11.0	0.18
P - 12			11.8	0.19
P - 12.5			12.3	0.19
P - 14	2.4	±0.09	13.8	0.19
P - 15			14.8	0.20
P - 16			15.8	0.20
P - 18			17.8	0.21
P - 20			19.8	0.22
P - 21			20.8	0.23
P - 22			21.8	0.24
P - 22A			21.7	0.24
P - 22.4			22.1	0.24
P - 24			23.7	0.24
P - 25			24.7	0.25
P - 25.5			25.2	0.25
P - 26			25.7	0.26
P - 28			27.7	0.28
P - 29			28.7	0.29
P - 29.5			29.2	0.29
P - 30			29.7	0.29
P - 31			30.7	0.30
P - 31.5			31.2	0.31
P - 32	3.5	±0.10	31.7	0.31
P - 34			33.7	0.33
P - 35			34.7	0.34
P - 35.5			35.2	0.34
P - 36			35.7	0.34
P - 38			37.7	0.37
P - 39			38.7	0.37
P - 40			39.7	0.37
P - 41			40.7	0.38
P - 42			41.7	0.39
P - 44			43.7	0.41
P - 45			44.7	0.41
P - 46			45.7	0.42
P - 48			47.7	0.44
P - 49			48.7	0.45
P - 50			49.7	0.45
P - 48A			47.6	0.45
P - 50A			49.6	0.45
P - 52			51.6	0.47
P - 53			52.6	0.48
P - 55			54.6	0.49
P - 56			55.6	0.50
P - 58	5.7	±0.13	57.6	0.52
P - 60			59.6	0.53
P - 62			61.6	0.55
P - 63			62.6	0.56
P - 65			64.6	0.57
P - 67			66.6	0.59
P - 70			69.6	0.61

JIS B 2401	WIDTH		ID	±
P - 71			70.6	0.62
P - 75			74.6	0.65
P - 80			79.6	0.69
P - 85			84.6	0.73
P - 90			89.6	0.77
P - 95			94.6	0.81
P - 100			99.6	0.84
P - 102			101.6	0.85
P - 105			104.6	0.87
P - 110	5.7	+0.13	109.6	0.91
P - 112			111.6	0.92
P - 115			114.6	0.94
P - 120			119.6	0.98
P - 125			124.6	1.01
P - 130			129.6	1.05
P - 132			131.6	1.06
P - 135			134.6	1.09
P - 140			139.6	1.12
P - 145			144.6	1.16
P - 150			149.6	1.19
P - 150A			149.5	1.19
P - 155			154.5	1.23
P - 160			159.5	1.26
P - 165			164.5	1.30
P - 170			169.5	1.33
P - 175			174.5	1.37
P - 180			179.5	1.40
P - 185			184.5	1.44
P - 190			189.5	1.48
P - 195			194.5	1.51
P - 200			199.5	1.55
P - 205			204.5	1.58
P - 209			208.5	1.61
P - 210			209.5	1.62
P - 215			214.5	1.65
P - 220			219.5	1.68
P - 225			224.5	1.71
P - 230			229.5	1.75
P - 235			234.5	1.78
P - 240	8.4	+0.15	239.5	1.81
P - 245			244.5	1.84
P - 250			249.5	1.88
P - 255			291.5	1.91
P - 260			201.5	1.94
P - 265			204.5	1.97
P - 270			207.5	2.01
P - 275			274.5	2.04
P - 280			279.5	2.07
P - 285			284.5	2.10
P - 290			289.5	2.14
P - 295			294.5	2.17
P - 300			299.5	2.20
P - 315			314.5	2.30
P - 320			319.5	2.33
P - 335			334.5	2.42
P - 340			339.5	2.45
P - 355			354.5	2.54
P - 360			359.5	2.57
P - 375			374.5	2.67
P - 385			384.5	2.73
P - 400			399.5	2.81

JIS B 2401	WIDTH		ID	±
G - 25			24.4	0.25
G - 30			29.4	0.29
G - 35			34.4	0.33
G - 40			39.4	0.37
G - 45			44.4	0.41
G - 50			49.4	0.45
G - 55			54.4	0.49
G - 60			59.4	0.53
G - 65			64.4	0.57
G - 70			69.4	0.61
G - 75			74.4	0.65
G - 80			79.4	0.69
G - 85	3.1	+0.1	84.4	0.73
G - 90			89.4	0.77
G - 95			94.4	0.81
G - 100			99.4	0.85
G - 105			104.4	0.87
G - 110			109.4	0.91
G - 115			114.4	0.94
G - 120			119.4	0.98
G - 125			124.4	1.01
G - 130			129.4	1.05
G - 135			134.4	1.08
G - 140			139.4	1.12
G - 145			144.4	1.16
G - 150			149.3	1.19
G - 155			154.3	1.23
G - 160			159.3	1.26
G - 165			164.3	1.30
G - 170			169.3	1.33
G - 175			174.3	1.37
G - 180			179.3	1.40
G - 185	5.7	+0.13	184.3	1.44
G - 190			189.3	1.47
G - 195			194.3	1.51
G - 200			199.3	1.55
G - 205			204.3	1.58
G - 210			209.3	1.61
G - 215			214.3	1.64
G - 220			219.3	1.68
G - 225			224.3	1.71
G - 230			229.3	1.73
G - 235			234.3	1.77
G - 240			239.3	1.81
G - 245			244.3	1.84
G - 250			249.3	1.88
G - 255			254.3	1.91
G - 260			259.3	1.94
G - 265			264.3	1.97
G - 270			269.3	2.01
G - 275			274.3	2.04
G - 280			279.3	2.07
G - 285			284.3	2.10
G - 290			289.3	2.14
G - 295			294.3	2.17
G - 300			299.3	2.20
G - 305			304.3	2.24
G - 310			309.3	2.27
G - 315			314.3	2.30
G - 320			319.3	2.33
G - 325			324.3	2.36

Compound information available on pages 20-37.

Surface Finish: ISO 4287 & Chamfer Information on pages 7-9.
For ISO tolerance charts, refer to pages 12-13.

MFPSEALS
www.mfpseals.com

Metric O-Ring Sizes - J.I.S. B2401

JIS B 2401	WIDTH		ID	±
G - 335			334.3	2.42
G - 340			339.3	2.45
G - 345			344.3	2.48
G - 350			349.3	2.51
G - 355			354.3	2.54
G - 360			359.3	2.57
G - 365	5.7	+0.13	364.3	2.60
G - 370			369.3	2.63
G - 375			374.3	2.67
G - 380			379.3	2.70
G - 385			384.3	2.73
G - 390			389.3	2.76
G - 395			394.3	2.79
G - 400			399.3	2.82
V - 15			14.5	0.20
V - 24			23.5	0.24
V - 34			33.5	0.33
V - 40	4	+0.10	39.5	0.37
V - 55			54.5	0.49
V - 70			69.0	0.61
V - 85			84.0	0.72
V - 100			99.0	0.83
V - 120			119.0	0.97
V - 150			148.5	1.18
V - 175			173.0	1.36
V - 225			222.5	1.70
V - 275			272.0	2.02
V - 325	6	+0.15	321.5	2.34
V - 380			376.0	2.68
V - 430			425.5	2.99
V - 480			475.0	3.30
V - 530			524.5	3.60
V - 585			579.0	3.92
V - 640			633.5	4.24
V - 690	10	+0.30	683.0	4.54
V - 740			732.5	4.83
V - 790			782.0	5.12
V - 845			836.5	5.44
V - 950			940.5	6.06
V - 1055			1044.0	6.67

SM O-Rings	WIDTH		ID	±
SM - 3			2.5	0.15
SM - 4			3.5	0.15
SM - 5			4.5	0.15
SM - 6			5.5	0.15
SM - 7			6.5	0.15
SM - 8			7.5	0.15
SM - 9			8.5	0.15
SM - 10			9.5	0.15
SM - 11.2	1.5	+0.1	10.7	0.15
SM - 12			11.5	0.15
SM - 12.5			12.0	0.15
SM - 14			13.5	0.15
SM - 15			14.5	0.15
SM - 16			15.5	0.15
SM - 18			17.5	0.15
SM - 20			19.5	0.15
SM - 22			21.5	0.15

SM O-Rings	WIDTH		ID	±
SM - 22.4			21.9	0.15
SM - 24			23.5	0.15
SM - 25			24.5	0.15
SM - 26			25.5	0.15
SM - 28			27.5	0.15
SM - 29			28.5	0.15
SM - 30			29.5	0.15
SM - 31.5			31.0	0.15
SM - 32			31.5	0.15
SM - 34			33.5	0.15
SM - 35.5			34.5	0.15
SM - 36	2.0	+0.1	35.0	0.15
SM - 38			35.5	0.15
SM - 39			37.5	0.15
SM - 40			38.5	0.15
SM - 42			39.5	0.25
SM - 44			41.5	0.25
SM - 45			43.5	0.25
SM - 46			44.5	0.25
SM - 48			45.5	0.25
SM - 50			47.5	0.25
SM - 53			49.5	0.25
SM - 55			52.5	0.25
SM - 56			54.5	0.25
SM - 60			55.5	0.25
SM - 63			59.5	0.25
SM - 65			62.5	0.25
SM - 67			66.5	0.25
SM - 70			69.5	0.25
SM - 71			70.5	0.4
SM - 75			74.5	0.4
SM - 80			79.5	0.4
SM - 85			84.5	0.4
SM - 90			89.5	0.4
SM - 95			94.5	0.4
SM - 100	2.0	+0.1	99.5	0.4
SM - 105			104.5	0.4
SM - 110			109.5	0.4
SM - 112			111.5	0.4
SM - 115			114.5	0.4
SM - 120			119.5	0.4
SM - 125			124.5	0.4
SM - 130			129.5	0.6
SM - 132			131.5	0.6
SM - 135			134.5	0.6
SM - 140			139.5	0.6
SM - 145			144.5	0.6
SM - 150			149.5	0.6

SM O-Rings	WIDTH		ID	±
KS - 1			2.75	0.13
KS - 2			3.75	0.13
KS - 3			4.75	0.13
KS - 4	1.70		5.75	0.13
KS - 5			6.75	0.13
KS - 6			7.75	0.13
KS - 7		+0.08	8.75	0.13
KS - 8			9.75	0.13
KS - 9			9.70	0.13
KS - 10			11.70	0.13
KS - 11	2.25		13.70	0.13
KS - 12			15.70	0.13
KS - 13			17.70	0.13
KS - 14			19.70	0.13
KS - 15			19.60	0.15
KS - 16			21.60	0.15
KS - 17			23.60	0.15
KS - 18			24.60	0.15
KS - 19			25.60	0.15
KS - 20	3.30	+0.10	27.60	0.15
KS - 21			29.60	0.15
KS - 22			31.60	0.15
KS - 23			33.60	0.15
KS - 24			35.60	0.15
KS - 25			37.60	0.15
KS - 26			39.60	0.15

Surface Finish: ISO 4287 & Chamfer Information on pages 7-9.
For ISO tolerance charts, refer to pages 12-13.

Compound information available on pages 20-37.

Metric O-Ring Sizes - Standard

MFPSEALS®
www.mfpseals.com

Measurements In Millimeters			
ID	±	CS	±
1.00 MM - CROSS SECTION			
1.00	0.12	1.00	0.07
1.50	0.12	1.00	0.07
2.00	0.13	1.00	0.07
2.50	0.13	1.00	0.07
3.00	0.14	1.00	0.07
3.50	0.14	1.00	0.07
4.00	0.14	1.00	0.07
4.50	0.14	1.00	0.07
5.00	0.15	1.00	0.07
5.50	0.15	1.00	0.07
6.00	0.15	1.00	0.07
6.50	0.16	1.00	0.07
7.00	0.16	1.00	0.07
7.50	0.16	1.00	0.07
8.00	0.16	1.00	0.07
8.50	0.16	1.00	0.07
9.00	0.17	1.00	0.07
9.50	0.17	1.00	0.07
10.00	0.17	1.00	0.07
10.50	0.18	1.00	0.07
11.00	0.18	1.00	0.07
11.50	0.19	1.00	0.07
12.00	0.19	1.00	0.07
12.50	0.19	1.00	0.07
13.00	0.19	1.00	0.07
13.50	0.19	1.00	0.07
14.00	0.19	1.00	0.07
14.50	0.20	1.00	0.07
15.00	0.20	1.00	0.07
15.50	0.20	1.00	0.07
16.00	0.20	1.00	0.07
16.50	0.21	1.00	0.07
17.00	0.21	1.00	0.07
17.50	0.21	1.00	0.07
18.00	0.21	1.00	0.07
18.50	0.22	1.00	0.07
19.00	0.22	1.00	0.07
19.50	0.22	1.00	0.07
20.00	0.22	1.00	0.07
20.50	0.22	1.00	0.07
21.00	0.23	1.00	0.07
21.50	0.23	1.00	0.07
22.00	0.24	1.00	0.07
22.50	0.24	1.00	0.07
23.00	0.24	1.00	0.07
23.50	0.24	1.00	0.07
24.00	0.24	1.00	0.07
24.50	0.25	1.00	0.07
25.00	0.25	1.00	0.07
26.00	0.25	1.00	0.07
27.00	0.26	1.00	0.07
28.00	0.26	1.00	0.07
29.00	0.27	1.00	0.07
30.00	0.27	1.00	0.07
31.00	0.28	1.00	0.07
32.00	0.29	1.00	0.07
33.00	0.29	1.00	0.07
34.00	0.30	1.00	0.07
35.00	0.30	1.00	0.07
36.00	0.31	1.00	0.07
37.00	0.31	1.00	0.07
38.00	0.32	1.00	0.07
39.00	0.33	1.00	0.07
40.00	0.33	1.00	0.07

Measurements In Millimeters			
ID	±	CS	±
1.00 MM - CROSS SECTION			
1.50	0.12	1.50	0.08
1.85	0.13	1.50	0.08
2.00	0.13	1.50	0.08
2.50	0.13	1.50	0.08
3.00	0.14	1.50	0.08
3.50	0.14	1.50	0.08
4.00	0.14	1.50	0.08
4.50	0.14	1.50	0.08
5.00	0.15	1.50	0.08
5.50	0.15	1.50	0.08
6.00	0.15	1.50	0.08
6.50	0.15	1.50	0.08
7.00	0.16	1.50	0.08
7.50	0.16	1.50	0.08
8.00	0.16	1.50	0.08
8.50	0.16	1.50	0.08
9.00	0.17	1.50	0.08
9.50	0.17	1.50	0.08
10.00	0.17	1.50	0.08
10.50	0.18	1.50	0.08
10.70	0.18	1.50	0.08
11.00	0.18	1.50	0.08
11.50	0.18	1.50	0.08
12.00	0.19	1.50	0.08
12.50	0.19	1.50	0.08
13.00	0.19	1.50	0.08
13.50	0.19	1.50	0.08
14.00	0.19	1.50	0.08
14.50	0.19	1.50	0.08
15.00	0.20	1.50	0.08
15.50	0.20	1.50	0.08
16.00	0.20	1.50	0.08
17.00	0.21	1.50	0.08
17.50	0.21	1.50	0.08
18.00	0.21	1.50	0.08
19.00	0.22	1.50	0.08
19.50	0.22	1.50	0.08
20.00	0.22	1.50	0.08
21.00	0.23	1.50	0.08
21.50	0.23	1.50	0.08
22.00	0.24	1.50	0.08
23.00	0.24	1.50	0.08
24.00	0.24	1.50	0.08
25.00	0.25	1.50	0.08
26.00	0.26	1.50	0.08
27.00	0.26	1.50	0.08
28.00	0.28	1.50	0.08
28.50	0.28	1.50	0.08
29.00	0.29	1.50	0.08
30.00	0.29	1.50	0.08
31.50	0.31	1.50	0.08
32.00	0.32	1.50	0.08
33.00	0.32	1.50	0.08
34.00	0.33	1.50	0.08
35.00	0.34	1.50	0.08
36.00	0.35	1.50	0.08
37.00	0.36	1.50	0.08
38.00	0.36	1.50	0.08
39.00	0.37	1.50	0.08
40.00	0.38	1.50	0.08
41.00	0.39	1.50	0.08
42.00	0.40	1.50	0.08
43.00	0.40	1.50	0.08
44.00	0.41	1.50	0.08

Measurements In Millimeters			
ID	±	CS	±
1.50 MM - CROSS SECTION			
45.00	0.42	1.50	0.08
46.00	0.43	1.50	0.08
47.00	0.44	1.50	0.08
48.00	0.44	1.50	0.08
49.00	0.45	1.50	0.08
50.00	0.46	1.50	0.08
51.00	0.47	1.50	0.08
52.00	0.47	1.50	0.08
53.00	0.48	1.50	0.08
54.00	0.50	1.50	0.08
55.00	0.50	1.50	0.08
56.00	0.51	1.50	0.08
57.00	0.52	1.50	0.08
58.00	0.52	1.50	0.08
59.00	0.54	1.50	0.08
60.00	0.54	1.50	0.08
61.00	0.55	1.50	0.08
62.00	0.55	1.50	0.08
63.00	0.56	1.50	0.08
64.00	0.58	1.50	0.08
65.00	0.58	1.50	0.08
66.00	0.59	1.50	0.08
67.00	0.59	1.50	0.08
68.00	0.61	1.50	0.08
69.00	0.61	1.50	0.08
70.00	0.62	1.50	0.08
71.00	0.63	1.50	0.08
72.00	0.63	1.50	0.08
73.00	0.64	1.50	0.08
74.00	0.65	1.50	0.08
75.00	0.65	1.50	0.08
76.00	0.66	1.50	0.08
77.00	0.67	1.50	0.08
78.00	0.67	1.50	0.08
79.00	0.68	1.50	0.08
80.00	0.69	1.50	0.08
81.00	0.69	1.50	0.08
82.00	0.70	1.50	0.08
83.00	0.71	1.50	0.08
84.00	0.72	1.50	0.08
85.00	0.72	1.50	0.08
86.00	0.73	1.50	0.08
87.00	0.74	1.50	0.08
88.00	0.74	1.50	0.08
89.00	0.75	1.50	0.08
90.00	0.76	1.50	0.08
91.00	0.76	1.50	0.08
92.00	0.77	1.50	0.08
93.00	0.78	1.50	0.08
94.00	0.78	1.50	0.08
95.00	0.79	1.50	0.08
96.00	0.80	1.50	0.08
97.00	0.80	1.50	0.08
98.00	0.81	1.50	0.08
99.00	0.82	1.50	0.08
100.00	0.82	1.50	0.08
2.00 MM - CROSS SECTION			
2.00	0.13	2.00	0.08
3.00	0.14	2.00	0.08
3.50	0.14	2.00	0.08
4.00	0.14	2.00	0.08
4.50	0.14	2.00	0.08
5.00	0.15	2.00	0.08

Measurements In Millimeters			
ID	±	CS	±
2.00 MM - CROSS SECTION			
6.00	0.15	2.00	0.08
6.50	0.16	2.00	0.08
7.00	0.16	2.00	0.08
8.00	0.16	2.00	0.08
9.00	0.17	2.00	0.08
9.50	0.17	2.00	0.08
10.00	0.17	2.00	0.08
11.00	0.18	2.00	0.08
11.50	0.19	2.00	0.08
12.00	0.19	2.00	0.08
12.50	0.19	2.00	0.08
13.00	0.19	2.00	0.08
14.00	0.19	2.00	0.08
15.00	0.20	2.00	0.08
16.00	0.20	2.00	0.08
17.00	0.21	2.00	0.08
18.00	0.21	2.00	0.08
19.00	0.22	2.00	0.08
19.50	0.22	2.00	0.08
20.00	0.22	2.00	0.08
21.00	0.23	2.00	0.08
22.00	0.24	2.00	0.08
23.00	0.24	2.00	0.08
23.50	0.24	2.00	0.08
24.00	0.24	2.00	0.08
24.50	0.25	2.00	0.08
25.00	0.25	2.00	0.08
26.00	0.26	2.00	0.08
27.00	0.26	2.00	0.08
28.00	0.28	2.00	0.08
29.00	0.29	2.00	0.08
29.50	0.29	2.00	0.08
30.00	0.29	2.00	0.08
31.00	0.31	2.00	0.08
32.00	0.32	2.00	0.08
33.00	0.32	2.00	0.08
33.50	0.32	2.00	0.08
34.00	0.33	2.00	0.08
35.00	0.34	2.00	0.08
36.00	0.35	2.00	0.08
36.50	0.35	2.00	0.08
37.00	0.36	2.00	0.08
37.50	0.36	2.00	0.08
38.00	0.36	2.00	0.08
38.50	0.37	2.00	0.08
39.00	0.37	2.00	0.08
40.00	0.38	2.00	0.08
41.00	0.39	2.00	0.08
42.00	0.40	2.00	0.08
43.00	0.40	2.00	0.08
44.00	0.41	2.00	0.08
45.00	0.42	2.00	0.08
46.00	0.43	2.00	0.08
47.00	0.44	2.00	0.08
48.00	0.44	2.00	0.08
49.00	0.45	2.00	0.08
50.00	0.46	2.00	0.08
51.00	0.47	2.00	0.08
52.00	0.47	2.00	0.08
53.00	0.48	2.00	0.08
54.00	0.50	2.00	0.08
55.00	0.50	2.00	0.08
55.50	0.51	2.00	0.08
56.00	0.51	2.00	0.08

Compound information available on pages 20-37.

Surface Finish: ISO 4287 & Chamfer Information on pages 7-9.
For ISO tolerance charts, refer to pages 12-13.

MFPSEALS®
www.mfpseals.com

Metric O-Ring Sizes - Standard

Measurements In Millimeters			
ID	±	CS	±
2.00 MM - CROSS SECTION			
57.00	0.52	2.00	0.08
58.00	0.52	2.00	0.08
59.00	0.54	2.00	0.08
60.00	0.54	2.00	0.08
61.00	0.55	2.00	0.08
62.00	0.55	2.00	0.08
63.00	0.56	2.00	0.08
64.00	0.58	2.00	0.08
64.50	0.58	2.00	0.08
65.00	0.58	2.00	0.08
66.00	0.59	2.00	0.08
67.00	0.59	2.00	0.08
68.00	0.61	2.00	0.08
69.00	0.61	2.00	0.08
69.50	0.61	2.00	0.08
70.00	0.62	2.00	0.08
71.00	0.63	2.00	0.08
72.00	0.63	2.00	0.08
73.00	0.64	2.00	0.08
74.00	0.65	2.00	0.08
75.00	0.65	2.00	0.08
76.00	0.66	2.00	0.08
77.00	0.67	2.00	0.08
78.00	0.67	2.00	0.08
79.00	0.68	2.00	0.08
80.00	0.69	2.00	0.08
81.00	0.69	2.00	0.08
82.00	0.70	2.00	0.08
83.00	0.71	2.00	0.08
84.00	0.72	2.00	0.08
85.00	0.72	2.00	0.08
86.00	0.73	2.00	0.08
87.00	0.74	2.00	0.08
88.00	0.74	2.00	0.08
89.00	0.75	2.00	0.08
90.00	0.76	2.00	0.08
91.00	0.76	2.00	0.08
92.00	0.77	2.00	0.08
93.00	0.78	2.00	0.08
94.00	0.78	2.00	0.08
95.00	0.79	2.00	0.08
96.00	0.80	2.00	0.08
97.00	0.80	2.00	0.08
98.00	0.81	2.00	0.08
99.00	0.82	2.00	0.08
100.00	0.82	2.00	0.08
105.00	0.86	2.00	0.08
109.00	0.89	2.00	0.08
2.50 MM - CROSS SECTION			
3.00	0.14	2.50	0.09
4.00	0.14	2.50	0.09
5.00	0.15	2.50	0.09
6.00	0.15	2.50	0.09
7.00	0.16	2.50	0.09
8.00	0.16	2.50	0.09
9.00	0.17	2.50	0.09
10.00	0.17	2.50	0.09
11.00	0.18	2.50	0.09
12.00	0.19	2.50	0.09
13.00	0.19	2.50	0.09
14.00	0.19	2.50	0.09
15.00	0.20	2.50	0.09

Measurements In Millimeters			
ID	±	CS	±
2.50 MM - CROSS SECTION			
16.00	0.20	2.50	0.09
17.00	0.21	2.50	0.09
18.00	0.21	2.50	0.09
19.00	0.22	2.50	0.09
20.00	0.22	2.50	0.09
21.00	0.23	2.50	0.09
22.00	0.24	2.50	0.09
23.00	0.24	2.50	0.09
24.00	0.24	2.50	0.09
25.00	0.25	2.50	0.09
26.00	0.26	2.50	0.09
27.00	0.26	2.50	0.09
28.00	0.28	2.50	0.09
29.00	0.29	2.50	0.09
30.00	0.29	2.50	0.09
31.00	0.31	2.50	0.09
32.00	0.32	2.50	0.09
33.00	0.32	2.50	0.09
34.00	0.33	2.50	0.09
35.00	0.34	2.50	0.09
36.00	0.35	2.50	0.09
37.00	0.36	2.50	0.09
38.00	0.36	2.50	0.09
39.00	0.37	2.50	0.09
40.00	0.38	2.50	0.09
41.00	0.39	2.50	0.09
42.00	0.40	2.50	0.09
43.00	0.41	2.50	0.09
44.00	0.42	2.50	0.09
45.00	0.42	2.50	0.09
46.00	0.43	2.50	0.09
47.00	0.44	2.50	0.09
48.00	0.44	2.50	0.09
49.00	0.45	2.50	0.09
50.00	0.46	2.50	0.09
51.00	0.47	2.50	0.09
52.00	0.47	2.50	0.09
53.00	0.48	2.50	0.09
54.00	0.50	2.50	0.09
55.00	0.50	2.50	0.09
56.00	0.51	2.50	0.09
57.00	0.52	2.50	0.09
58.00	0.52	2.50	0.09
59.00	0.54	2.50	0.09
60.00	0.54	2.50	0.09
61.00	0.55	2.50	0.09
62.00	0.55	2.50	0.09
63.00	0.56	2.50	0.09
64.00	0.58	2.50	0.09
65.00	0.58	2.50	0.09
66.00	0.59	2.50	0.09
67.00	0.59	2.50	0.09
68.00	0.61	2.50	0.09
69.00	0.61	2.50	0.09
70.00	0.62	2.50	0.09
71.00	0.63	2.50	0.09
72.00	0.63	2.50	0.09
73.00	0.64	2.50	0.09
74.00	0.65	2.50	0.09
75.00	0.65	2.50	0.09
76.00	0.66	2.50	0.09
77.00	0.67	2.50	0.09
78.00	0.67	2.50	0.09

Measurements In Millimeters			
ID	±	CS	±
2.50 MM - CROSS SECTION			
79.00	0.68	2.50	0.09
80.00	0.69	2.50	0.09
81.00	0.69	2.50	0.09
82.00	0.70	2.50	0.09
83.00	0.71	2.50	0.09
84.00	0.72	2.50	0.09
85.00	0.72	2.50	0.09
86.00	0.73	2.50	0.09
87.00	0.74	2.50	0.09
88.00	0.74	2.50	0.09
89.00	0.75	2.50	0.09
90.00	0.76	2.50	0.09
91.00	0.76	2.50	0.09
92.00	0.77	2.50	0.09
93.00	0.78	2.50	0.09
94.00	0.78	2.50	0.09
95.00	0.79	2.50	0.09
96.00	0.80	2.50	0.09
97.00	0.80	2.50	0.09
98.00	0.81	2.50	0.09
99.00	0.82	2.50	0.09
100.00	0.82	2.50	0.09
101.00	0.83	2.50	0.09
102.00	0.84	2.50	0.09
103.00	0.85	2.50	0.09
104.00	0.85	2.50	0.09
105.00	0.86	2.50	0.09
106.00	0.87	2.50	0.09
107.00	0.87	2.50	0.09
108.00	0.88	2.50	0.09
109.00	0.89	2.50	0.09
110.00	0.89	2.50	0.09
111.00	0.90	2.50	0.09
112.00	0.91	2.50	0.09
113.00	0.91	2.50	0.09
114.00	0.92	2.50	0.09
115.00	0.93	2.50	0.09
116.00	0.93	2.50	0.09
117.00	0.94	2.50	0.09
118.00	0.95	2.50	0.09
119.00	0.95	2.50	0.09
120.00	0.96	2.50	0.09
121.00	0.97	2.50	0.09
122.00	0.97	2.50	0.09
123.00	0.98	2.50	0.09
124.00	0.99	2.50	0.09
125.00	0.99	2.50	0.09
126.00	1.00	2.50	0.09
127.00	1.01	2.50	0.09
128.00	1.01	2.50	0.09
129.00	1.02	2.50	0.09
130.00	1.03	2.50	0.09
131.00	1.03	2.50	0.09
132.00	1.04	2.50	0.09
133.00	1.05	2.50	0.09
134.00	1.00	2.50	0.09
135.00	1.06	2.50	0.09
136.00	1.07	2.50	0.09
137.00	1.07	2.50	0.09
138.00	1.08	2.50	0.09
139.00	1.09	2.50	0.09
140.00	1.09	2.50	0.09
141.00	1.10	2.50	0.09

Measurements In Millimeters			
ID	±	CS	±
2.50 MM - CROSS SECTION			
142.00	1.11	2.50	0.09
143.00	1.11	2.50	0.09
144.00	1.12	2.50	0.09
145.00	1.13	2.50	0.09
146.00	1.13	2.50	0.09
147.00	1.14	2.50	0.09
148.00	1.15	2.50	0.09
149.00	1.15	2.50	0.09
150.00	1.16	2.50	0.09
162.00	1.24	2.50	0.09
3.00 MM - CROSS SECTION			
3.00	0.14	3.00	0.09
4.00	0.14	3.00	0.09
5.00	0.15	3.00	0.09
6.00	0.15	3.00	0.09
7.00	0.16	3.00	0.09
8.00	0.16	3.00	0.09
9.00	0.17	3.00	0.09
9.50	0.17	3.00	0.09
10.00	0.17	3.00	0.09
11.00	0.18	3.00	0.09
12.00	0.19	3.00	0.09
13.00	0.19	3.00	0.09
13.50	0.19	3.00	0.09
14.00	0.19	3.00	0.09
15.00	0.20	3.00	0.09
15.50	0.20	3.00	0.09
16.00	0.20	3.00	0.09
17.00	0.21	3.00	0.09
17.50	0.21	3.00	0.09
18.00	0.21	3.00	0.09
19.00	0.22	3.00	0.09
20.00	0.22	3.00	0.09
21.00	0.23	3.00	0.09
22.00	0.24	3.00	0.09
23.00	0.24	3.00	0.09
24.00	0.24	3.00	0.09
25.00	0.25	3.00	0.09
26.00	0.26	3.00	0.09
27.00	0.26	3.00	0.09
28.00	0.28	3.00	0.09
28.50	0.28	3.00	0.09
29.00	0.29	3.00	0.09
29.50	0.29	3.00	0.09
30.00	0.29	3.00	0.09
31.00	0.31	3.00	0.09
32.00	0.32	3.00	0.09
33.00	0.32	3.00	0.09
34.00	0.33	3.00	0.09
35.00	0.34	3.00	0.09
36.00	0.35	3.00	0.09
36.50	0.35	3.00	0.09
37.00	0.36	3.00	0.09
37.50	0.36	3.00	0.09
38.00	0.36	3.00	0.09
39.00	0.37	3.00	0.09
40.00	0.38	3.00	0.09
41.00	0.39	3.00	0.09
42.00	0.40	3.00	0.09
42.50	0.40	3.00	0.09
43.00	0.40	3.00	0.09
44.00	0.41	3.00	0.09

Surface Finish: ISO 4287 & Chamfer Information on pages 7-9.
For ISO tolerance charts, refer to pages 12-13.

Compound information available on pages 20-37.

Metric O-Ring Sizes - Standard

MFPSEALS
www.mfpseals.com

Measurements In Millimeters			
ID	±	CS	±
3.00 MM - CROSS SECTION			
45.00	0.42	3.00	0.09
46.00	0.43	3.00	0.09
47.00	0.44	3.00	0.09
48.00	0.44	3.00	0.09
49.00	0.45	3.00	0.09
50.00	0.46	3.00	0.09
51.00	0.47	3.00	0.09
52.00	0.47	3.00	0.09
53.00	0.48	3.00	0.09
54.00	0.50	3.00	0.09
55.00	0.50	3.00	0.09
56.00	0.51	3.00	0.09
57.00	0.52	3.00	0.09
58.00	0.52	3.00	0.09
59.00	0.54	3.00	0.09
60.00	0.54	3.00	0.09
61.00	0.55	3.00	0.09
62.00	0.55	3.00	0.09
63.00	0.56	3.00	0.09
64.00	0.58	3.00	0.09
65.00	0.58	3.00	0.09
66.00	0.59	3.00	0.09
67.00	0.59	3.00	0.09
68.00	0.61	3.00	0.09
69.00	0.61	3.00	0.09
70.00	0.62	3.00	0.09
71.00	0.63	3.00	0.09
72.00	0.63	3.00	0.09
73.00	0.64	3.00	0.09
74.00	0.65	3.00	0.09
75.00	0.65	3.00	0.09
76.00	0.66	3.00	0.09
77.00	0.67	3.00	0.09
78.00	0.67	3.00	0.09
79.00	0.68	3.00	0.09
80.00	0.69	3.00	0.09
81.00	0.69	3.00	0.09
82.00	0.70	3.00	0.09
83.00	0.71	3.00	0.09
84.00	0.72	3.00	0.09
85.00	0.72	3.00	0.09
86.00	0.73	3.00	0.09
87.00	0.74	3.00	0.09
88.00	0.74	3.00	0.09
89.00	0.75	3.00	0.09
90.00	0.76	3.00	0.09
91.00	0.76	3.00	0.09
92.00	0.77	3.00	0.09
93.00	0.78	3.00	0.09
94.00	0.78	3.00	0.09
94.50	0.79	3.00	0.09
95.00	0.79	3.00	0.09
96.00	0.80	3.00	0.09
97.00	0.80	3.00	0.09
98.00	0.81	3.00	0.09
98.50	0.81	3.00	0.09
99.00	0.82	3.00	0.09
100.00	0.82	3.00	0.09
101.00	0.83	3.00	0.09
102.00	0.84	3.00	0.09
103.00	0.85	3.00	0.09
104.00	0.85	3.00	0.09
105.00	0.86	3.00	0.09

Measurements In Millimeters			
ID	±	CS	±
3.00 MM - CROSS SECTION			
106.00	0.87	3.00	0.09
107.00	0.87	3.00	0.09
108.00	0.88	3.00	0.09
109.00	0.89	3.00	0.09
110.00	0.89	3.00	0.09
111.00	0.90	3.00	0.09
112.00	0.91	3.00	0.09
113.00	0.91	3.00	0.09
114.00	0.92	3.00	0.09
115.00	0.93	3.00	0.09
116.00	0.93	3.00	0.09
117.00	0.94	3.00	0.09
118.00	0.95	3.00	0.09
119.00	0.95	3.00	0.09
120.00	0.96	3.00	0.09
121.00	0.97	3.00	0.09
122.00	0.97	3.00	0.09
123.00	0.98	3.00	0.09
124.00	0.99	3.00	0.09
125.00	0.99	3.00	0.09
126.00	1.00	3.00	0.09
127.00	1.01	3.00	0.09
128.00	1.01	3.00	0.09
129.00	1.02	3.00	0.09
130.00	1.03	3.00	0.09
131.00	1.03	3.00	0.09
132.00	1.04	3.00	0.09
133.00	1.05	3.00	0.09
134.00	1.05	3.00	0.09
135.00	1.06	3.00	0.09
136.00	1.07	3.00	0.09
137.00	1.07	3.00	0.09
138.00	1.08	3.00	0.09
139.00	1.09	3.00	0.09
140.00	1.09	3.00	0.09
141.00	1.10	3.00	0.09
142.00	1.11	3.00	0.09
143.00	1.11	3.00	0.09
144.00	1.12	3.00	0.09
145.00	1.13	3.00	0.09
146.00	1.13	3.00	0.09
147.00	1.14	3.00	0.09
148.00	1.15	3.00	0.09
149.00	1.15	3.00	0.09
150.00	1.16	3.00	0.09
151.00	1.17	3.00	0.09
152.00	1.17	3.00	0.09
153.00	1.18	3.00	0.09
154.00	1.19	3.00	0.09
155.00	1.19	3.00	0.09
156.00	1.20	3.00	0.09
157.00	1.21	3.00	0.09
158.00	1.21	3.00	0.09
159.00	1.22	3.00	0.09
160.00	1.23	3.00	0.09
161.00	1.23	3.00	0.09
162.00	1.24	3.00	0.09
163.00	1.25	3.00	0.09
164.00	1.25	3.00	0.09
165.00	1.26	3.00	0.09
166.00	1.27	3.00	0.09
167.00	1.27	3.00	0.09
168.00	1.28	3.00	0.09

Measurements In Millimeters			
ID	±	CS	±
3.00 MM - CROSS SECTION			
169.00	1.29	3.00	0.09
170.00	1.29	3.00	0.09
171.00	1.30	3.00	0.09
172.00	1.31	3.00	0.09
173.00	1.31	3.00	0.09
174.00	1.32	3.00	0.09
175.00	1.33	3.00	0.09
176.00	1.33	3.00	0.09
177.00	1.34	3.00	0.09
178.00	1.35	3.00	0.09
179.00	1.35	3.00	0.09
180.00	1.36	3.00	0.09
181.00	1.37	3.00	0.09
182.00	1.37	3.00	0.09
183.00	1.38	3.00	0.09
184.00	1.39	3.00	0.09
185.00	1.39	3.00	0.09
186.00	1.40	3.00	0.09
187.00	1.41	3.00	0.09
188.00	1.41	3.00	0.09
189.00	1.42	3.00	0.09
190.00	1.43	3.00	0.09
191.00	1.43	3.00	0.09
192.00	1.44	3.00	0.09
193.00	1.45	3.00	0.09
194.00	1.45	3.00	0.09
195.00	1.46	3.00	0.09
196.00	1.46	3.00	0.09
197.00	1.47	3.00	0.09
198.00	1.48	3.00	0.09
199.00	1.48	3.00	0.09
200.00	1.49	3.00	0.09
201.00	1.50	3.00	0.09
202.00	1.50	3.00	0.09
203.00	1.51	3.00	0.09
204.00	1.52	3.00	0.09
205.00	1.52	3.00	0.09
206.00	1.53	3.00	0.09
207.00	1.54	3.00	0.09
208.00	1.54	3.00	0.09
209.00	1.55	3.00	0.09
210.00	1.56	3.00	0.09
211.00	1.56	3.00	0.09
212.00	1.57	3.00	0.09
213.00	1.58	3.00	0.09
214.00	1.58	3.00	0.09
215.00	1.59	3.00	0.09
216.00	1.60	3.00	0.09
217.00	1.60	3.00	0.09
218.00	1.61	3.00	0.09
219.00	1.62	3.00	0.09
220.00	1.62	3.00	0.09
221.00	1.63	3.00	0.09
222.00	1.64	3.00	0.09
223.00	1.64	3.00	0.09
224.00	1.65	3.00	0.09
225.00	1.65	3.00	0.09
226.00	1.66	3.00	0.09
227.00	1.67	3.00	0.09
228.00	1.67	3.00	0.09
229.00	1.68	3.00	0.09
230.00	1.69	3.00	0.09
231.00	1.69	3.00	0.09

Measurements In Millimeters			
ID	±	CS	±
3.00 MM - CROSS SECTION			
232.00	1.70	3.00	0.09
233.00	1.71	3.00	0.09
234.00	1.71	3.00	0.09
235.00	1.72	3.00	0.09
236.00	1.73	3.00	0.09
237.00	1.73	3.00	0.09
238.00	1.74	3.00	0.09
239.00	1.75	3.00	0.09
240.00	1.75	3.00	0.09
241.00	1.76	3.00	0.09
242.00	1.77	3.00	0.09
243.00	1.77	3.00	0.09
244.00	1.78	3.00	0.09
245.00	1.78	3.00	0.09
246.00	1.79	3.00	0.09
247.00	1.80	3.00	0.09
248.00	1.80	3.00	0.09
249.00	1.81	3.00	0.09
250.00	1.82	3.00	0.09
260.00	1.88	3.00	0.09
270.00	1.95	3.00	0.09
280.00	2.01	3.00	0.09
285.00	2.04	3.00	0.09
290.00	2.08	3.00	0.09
310.00	2.20	3.00	0.09
4.00 MM - CROSS SECTION			
4.00	0.14	4.00	0.10
5.00	0.15	4.00	0.10
6.00	0.15	4.00	0.10
7.00	0.16	4.00	0.10
8.00	0.16	4.00	0.10
9.00	0.17	4.00	0.10
10.00	0.17	4.00	0.10
11.00	0.18	4.00	0.10
12.00	0.19	4.00	0.10
13.00	0.19	4.00	0.10
14.00	0.19	4.00	0.10
15.00	0.20	4.00	0.10
16.00	0.20	4.00	0.10
17.00	0.21	4.00	0.10
18.00	0.21	4.00	0.10
19.00	0.22	4.00	0.10
20.00	0.22	4.00	0.10
21.00	0.23	4.00	0.10
22.00	0.24	4.00	0.10
23.00	0.24	4.00	0.10
24.00	0.24	4.00	0.10
25.00	0.25	4.00	0.10
26.00	0.26	4.00	0.10
27.00	0.26	4.00	0.10
28.00	0.28	4.00	0.10
29.00	0.29	4.00	0.10
30.00	0.29	4.00	0.10
31.00	0.31	4.00	0.10
32.00	0.32	4.00	0.10
33.00	0.32	4.00	0.10
34.00	0.33	4.00	0.10
35.00	0.34	4.00	0.10
36.00	0.35	4.00	0.10
37.00	0.36	4.00	0.10
38.00	0.36	4.00	0.10
39.00	0.37	4.00	0.10

Compound information available on pages 20-37.

Surface Finish: ISO 4287 & Chamfer Information on pages 7-9.
For ISO tolerance charts, refer to pages 12-13.

MFPSEALS®
www.mfpseals.com

Metric O-Ring Sizes - Standard

Measurements In Millimeters				Measurements In Millimeters				Measurements In Millimeters				Measurements In Millimeters			
ID	±	CS	±	ID	±	CS	±	ID	±	CS	±	ID	±	CS	±
4.00 MM - CROSS SECTION				4.00 MM - CROSS SECTION				4.00 MM - CROSS SECTION				4.00 MM - CROSS SECTION			
40.00	0.38	4.00	0.10	103.00	0.85	4.00	0.10	165.00	1.26	4.00	0.10	228.00	1.67	4.00	0.10
41.00	0.39	4.00	0.10	104.00	0.85	4.00	0.10	166.00	1.27	4.00	0.10	229.00	1.68	4.00	0.10
42.00	0.40	4.00	0.10	105.00	0.86	4.00	0.10	167.00	1.27	4.00	0.10	230.00	1.69	4.00	0.10
43.00	0.40	4.00	0.10	106.00	0.87	4.00	0.10	168.00	1.28	4.00	0.10	231.00	1.69	4.00	0.10
44.00	0.41	4.00	0.10	107.00	0.87	4.00	0.10	169.00	1.29	4.00	0.10	232.00	1.70	4.00	0.10
45.00	0.42	4.00	0.10	108.00	0.88	4.00	0.10	170.00	1.29	4.00	0.10	233.00	1.71	4.00	0.10
46.00	0.43	4.00	0.10	109.00	0.89	4.00	0.10	171.00	1.30	4.00	0.10	234.00	1.71	4.00	0.10
47.00	0.44	4.00	0.10	110.00	0.89	4.00	0.10	172.00	1.31	4.00	0.10	235.00	1.72	4.00	0.10
48.00	0.44	4.00	0.10	111.00	0.90	4.00	0.10	173.00	1.31	4.00	0.10	236.00	1.73	4.00	0.10
49.00	0.45	4.00	0.10	112.00	0.91	4.00	0.10	174.00	1.32	4.00	0.10	237.00	1.73	4.00	0.10
50.00	0.46	4.00	0.10	113.00	0.91	4.00	0.10	175.00	1.33	4.00	0.10	238.00	1.74	4.00	0.10
51.00	0.47	4.00	0.10	114.00	0.92	4.00	0.10	176.00	1.33	4.00	0.10	239.00	1.75	4.00	0.10
52.00	0.47	4.00	0.10	115.00	0.93	4.00	0.10	177.00	1.34	4.00	0.10	240.00	1.75	4.00	0.10
53.00	0.48	4.00	0.10	116.00	0.93	4.00	0.10	178.00	1.35	4.00	0.10	241.00	1.76	4.00	0.10
54.00	0.50	4.00	0.10	117.00	0.94	4.00	0.10	179.00	1.35	4.00	0.10	242.00	1.77	4.00	0.10
55.00	0.50	4.00	0.10	118.00	0.95	4.00	0.10	180.00	1.36	4.00	0.10	243.00	1.77	4.00	0.10
56.00	0.51	4.00	0.10	119.00	0.95	4.00	0.10	181.00	1.37	4.00	0.10	244.00	1.78	4.00	0.10
57.00	0.52	4.00	0.10	120.00	0.96	4.00	0.10	182.00	1.37	4.00	0.10	245.00	1.78	4.00	0.10
58.00	0.52	4.00	0.10	121.00	0.97	4.00	0.10	183.00	1.38	4.00	0.10	246.00	1.79	4.00	0.10
59.00	0.54	4.00	0.10	122.00	0.97	4.00	0.10	184.00	1.39	4.00	0.10	247.00	1.80	4.00	0.10
60.00	0.54	4.00	0.10	123.00	0.98	4.00	0.10	185.00	1.39	4.00	0.10	248.00	1.80	4.00	0.10
61.00	0.55	4.00	0.10	124.00	0.99	4.00	0.10	186.00	1.40	4.00	0.10	249.00	1.81	4.00	0.10
62.00	0.55	4.00	0.10	125.00	0.99	4.00	0.10	187.00	1.41	4.00	0.10	250.00	1.82	4.00	0.10
63.00	0.56	4.00	0.10	126.00	1.00	4.00	0.10	188.00	1.41	4.00	0.10	251.00	1.82	4.00	0.10
64.00	0.58	4.00	0.10	127.00	1.01	4.00	0.10	189.00	1.42	4.00	0.10	252.00	1.83	4.00	0.10
65.00	0.58	4.00	0.10	128.00	1.01	4.00	0.10	190.00	1.43	4.00	0.10	253.00	1.84	4.00	0.10
66.00	0.59	4.00	0.10	129.00	1.02	4.00	0.10	191.00	1.43	4.00	0.10	254.00	1.84	4.00	0.10
67.00	0.59	4.00	0.10	130.00	1.03	4.00	0.10	192.00	1.44	4.00	0.10	255.00	1.85	4.00	0.10
68.00	0.61	4.00	0.10	131.00	1.03	4.00	0.10	193.00	1.45	4.00	0.10	256.00	1.86	4.00	0.10
69.00	0.61	4.00	0.10	132.00	1.04	4.00	0.10	194.00	1.45	4.00	0.10	257.00	1.86	4.00	0.10
70.00	0.62	4.00	0.10	133.00	1.05	4.00	0.10	195.00	1.46	4.00	0.10	258.00	1.87	4.00	0.10
71.00	0.63	4.00	0.10	134.00	1.05	4.00	0.10	196.00	1.46	4.00	0.10	259.00	1.88	4.00	0.10
72.00	0.63	4.00	0.10	135.00	1.06	4.00	0.10	197.00	1.47	4.00	0.10	260.00	1.88	4.00	0.10
73.00	0.64	4.00	0.10	136.00	1.07	4.00	0.10	198.00	1.48	4.00	0.10	261.00	1.89	4.00	0.10
74.00	0.65	4.00	0.10	137.00	1.07	4.00	0.10	199.00	1.48	4.00	0.10	262.00	1.89	4.00	0.10
75.00	0.65	4.00	0.10	138.00	1.08	4.00	0.10	200.00	1.49	4.00	0.10	263.00	1.90	4.00	0.10
76.00	0.66	4.00	0.10	139.00	1.09	4.00	0.10	201.00	1.50	4.00	0.10	264.00	1.91	4.00	0.10
77.00	0.67	4.00	0.10	140.00	1.09	4.00	0.10	202.00	1.50	4.00	0.10	265.00	1.91	4.00	0.10
78.00	0.67	4.00	0.10	140.50	1.10	4.00	0.10	203.00	1.51	4.00	0.10	266.00	1.92	4.00	0.10
79.00	0.68	4.00	0.10	141.00	1.10	4.00	0.10	204.00	1.52	4.00	0.10	267.00	1.93	4.00	0.10
80.00	0.69	4.00	0.10	142.00	1.11	4.00	0.10	205.00	1.52	4.00	0.10	268.00	1.93	4.00	0.10
81.00	0.69	4.00	0.10	143.00	1.11	4.00	0.10	206.00	1.53	4.00	0.10	269.00	1.94	4.00	0.10
82.00	0.70	4.00	0.10	144.00	1.12	4.00	0.10	207.00	1.54	4.00	0.10	270.00	1.95	4.00	0.10
83.00	0.71	4.00	0.10	145.00	1.13	4.00	0.10	208.00	1.54	4.00	0.10	271.00	1.95	4.00	0.10
84.00	0.72	4.00	0.10	146.00	1.13	4.00	0.10	209.00	1.55	4.00	0.10	272.00	1.96	4.00	0.10
85.00	0.72	4.00	0.10	147.00	1.14	4.00	0.10	210.00	1.56	4.00	0.10	273.00	1.97	4.00	0.10
86.00	0.73	4.00	0.10	148.00	1.15	4.00	0.10	211.00	1.56	4.00	0.10	274.00	1.97	4.00	0.10
87.00	0.74	4.00	0.10	149.00	1.15	4.00	0.10	212.00	1.57	4.00	0.10	275.00	1.98	4.00	0.10
88.00	0.74	4.00	0.10	150.00	1.16	4.00	0.10	213.00	1.58	4.00	0.10	276.00	1.99	4.00	0.10
89.00	0.75	4.00	0.10	151.00	1.17	4.00	0.10	214.00	1.58	4.00	0.10	277.00	1.99	4.00	0.10
90.00	0.76	4.00	0.10	152.00	1.17	4.00	0.10	215.00	1.59	4.00	0.10	278.00	2.00	4.00	0.10
91.00	0.76	4.00	0.10	153.00	1.18	4.00	0.10	216.00	1.60	4.00	0.10	279.00	2.00	4.00	0.10
92.00	0.77	4.00	0.10	154.00	1.19	4.00	0.10	217.00	1.60	4.00	0.10	280.00	2.01	4.00	0.10
93.00	0.78	4.00	0.10	155.00	1.19	4.00	0.10	218.00	1.61	4.00	0.10	281.00	2.02	4.00	0.10
94.00	0.78	4.00	0.10	156.00	1.20	4.00	0.10	219.00	1.62	4.00	0.10	282.00	2.02	4.00	0.10
95.00	0.79	4.00	0.10	157.00	1.21	4.00	0.10	220.00	1.62	4.00	0.10	283.00	2.03	4.00	0.10
96.00	0.80	4.00	0.10	158.00	1.21	4.00	0.10	221.00	1.63	4.00	0.10	284.00	2.04	4.00	0.10
97.00	0.80	4.00	0.10	159.00	1.22	4.00	0.10	222.00	1.64	4.00	0.10	285.00	2.04	4.00	0.10
98.00	0.81	4.00	0.10	160.00	1.23	4.00	0.10	223.00	1.64	4.00	0.10	286.00	2.05	4.00	0.10
99.00	0.82	4.00	0.10	161.00	1.23	4.00	0.10	224.00	1.65	4.00	0.10	287.00	2.06	4.00	0.10
100.00	0.82	4.00	0.10	162.00	1.24	4.00	0.10	225.00	1.65	4.00	0.10	288.00	2.06	4.00	0.10
101.00	0.83	4.00	0.10	163.00	1.25	4.00	0.10	226.00	1.66	4.00	0.10	289.00	2.07	4.00	0.10
102.00	0.84	4.00	0.10	164.00	1.25	4.00	0.10	227.00	1.67	4.00	0.10	290.00	2.08	4.00	0.10

Surface Finish: ISO 4287 & Chamfer Information on pages 7-9.
For ISO tolerance charts, refer to pages 12-13.

Compound information available on pages 20-37.

Metric O-Ring Sizes - Standard

MFPSEALS®
www.mfpseals.com

Measurements In Millimeters			
ID	±	CS	±
4.00 MM - CROSS SECTION			
291.00	2.08	4.00	0.10
292.00	2.09	4.00	0.10
293.00	2.10	4.00	0.10
294.00	2.10	4.00	0.10
295.00	2.11	4.00	0.10
296.00	2.11	4.00	0.10
297.00	2.12	4.00	0.10
298.00	2.13	4.00	0.10
299.00	2.13	4.00	0.10
300.00	2.14	4.00	0.10
301.00	2.15	4.00	0.10
302.00	2.15	4.00	0.10
303.00	2.16	4.00	0.10
304.00	2.17	4.00	0.10
305.00	2.17	4.00	0.10
306.00	2.18	4.00	0.10
307.00	2.19	4.00	0.10
308.00	2.19	4.00	0.10
309.00	2.20	4.00	0.10
310.00	2.20	4.00	0.10
311.00	2.21	4.00	0.10
312.00	2.22	4.00	0.10
313.00	2.22	4.00	0.10
314.00	2.23	4.00	0.10
315.00	2.24	4.00	0.10
316.00	2.24	4.00	0.10
317.00	2.25	4.00	0.10
318.00	2.26	4.00	0.10
319.00	2.26	4.00	0.10
320.00	2.27	4.00	0.10
321.00	2.27	4.00	0.10
322.00	2.28	4.00	0.10
323.00	2.29	4.00	0.10
324.00	2.29	4.00	0.10
325.00	2.30	4.00	0.10
326.00	2.31	4.00	0.10
327.00	2.31	4.00	0.10
328.00	2.32	4.00	0.10
329.00	2.33	4.00	0.10
330.00	2.33	4.00	0.10
331.00	2.34	4.00	0.10
332.00	2.35	4.00	0.10
333.00	2.35	4.00	0.10
334.00	2.36	4.00	0.10
335.00	2.36	4.00	0.10
336.00	2.37	4.00	0.10
337.00	2.38	4.00	0.10
338.00	2.38	4.00	0.10
339.00	2.39	4.00	0.10
340.00	2.40	4.00	0.10
341.00	2.40	4.00	0.10
342.00	2.41	4.00	0.10
343.00	2.42	4.00	0.10
344.00	2.42	4.00	0.10
345.00	2.43	4.00	0.10
346.00	2.43	4.00	0.10
347.00	2.44	4.00	0.10
348.00	2.45	4.00	0.10
349.00	2.45	4.00	0.10
350.00	2.46	4.00	0.10
351.00	2.47	4.00	0.10
352.00	2.47	4.00	0.10
353.00	2.48	4.00	0.10

Measurements In Millimeters			
ID	±	CS	±
4.00 MM - CROSS SECTION			
354.00	2.49	4.00	0.10
355.00	2.49	4.00	0.10
356.00	2.50	4.00	0.10
357.00	2.50	4.00	0.10
358.00	2.51	4.00	0.10
359.00	2.52	4.00	0.10
360.00	2.52	4.00	0.10
361.00	2.53	4.00	0.10
362.00	2.54	4.00	0.10
363.00	2.54	4.00	0.10
364.00	2.55	4.00	0.10
365.00	2.56	4.00	0.10
366.00	2.56	4.00	0.10
367.00	2.57	4.00	0.10
368.00	2.57	4.00	0.10
369.00	2.58	4.00	0.10
370.00	2.59	4.00	0.10
371.00	2.59	4.00	0.10
372.00	2.60	4.00	0.10
373.00	2.61	4.00	0.10
374.00	2.61	4.00	0.10
375.00	2.62	4.00	0.10
376.00	2.63	4.00	0.10
377.00	2.63	4.00	0.10
378.00	2.64	4.00	0.10
379.00	2.64	4.00	0.10
380.00	2.65	4.00	0.10
381.00	2.66	4.00	0.10
382.00	2.66	4.00	0.10
383.00	2.67	4.00	0.10
384.00	2.68	4.00	0.10
385.00	2.68	4.00	0.10
386.00	2.69	4.00	0.10
387.00	2.70	4.00	0.10
388.00	2.70	4.00	0.10
389.00	2.71	4.00	0.10
390.00	2.71	4.00	0.10
391.00	2.72	4.00	0.10
392.00	2.73	4.00	0.10
393.00	2.73	4.00	0.10
394.00	2.74	4.00	0.10
395.00	2.75	4.00	0.10
396.00	2.75	4.00	0.10
397.00	2.76	4.00	0.10
398.00	2.77	4.00	0.10
399.00	2.77	4.00	0.10
400.00	2.78	4.00	0.10
401.00	2.78	4.00	0.10
402.00	2.79	4.00	0.10
403.00	2.80	4.00	0.10
404.00	2.80	4.00	0.10
405.00	2.81	4.00	0.10
406.00	2.82	4.00	0.10
407.00	2.82	4.00	0.10
408.00	2.83	4.00	0.10
409.00	2.84	4.00	0.10
410.00	2.84	4.00	0.10
411.00	2.85	4.00	0.10
412.00	2.85	4.00	0.10
413.00	2.86	4.00	0.10
414.00	2.87	4.00	0.10
415.00	2.87	4.00	0.10
416.00	2.88	4.00	0.10

Measurements In Millimeters			
ID	±	CS	±
4.00 MM - CROSS SECTION			
417.00	2.89	4.00	0.10
418.00	2.89	4.00	0.10
419.00	2.90	4.00	0.10
420.00	2.90	4.00	0.10
421.00	2.91	4.00	0.10
422.00	2.92	4.00	0.10
423.00	2.92	4.00	0.10
424.00	2.93	4.00	0.10
425.00	2.94	4.00	0.10
426.00	2.94	4.00	0.10
427.00	2.95	4.00	0.10
428.00	2.96	4.00	0.10
429.00	2.96	4.00	0.10
430.00	2.97	4.00	0.10
431.00	2.97	4.00	0.10
432.00	2.98	4.00	0.10
433.00	2.99	4.00	0.10
434.00	2.99	4.00	0.10
435.00	3.00	4.00	0.10
436.00	3.01	4.00	0.10
437.00	3.01	4.00	0.10
438.00	3.02	4.00	0.10
439.00	3.02	4.00	0.10
440.00	3.03	4.00	0.10
441.00	3.04	4.00	0.10
442.00	3.04	4.00	0.10
443.00	3.05	4.00	0.10
444.00	3.06	4.00	0.10
445.00	3.06	4.00	0.10
446.00	3.07	4.00	0.10
447.00	3.08	4.00	0.10
448.00	3.08	4.00	0.10
449.00	3.09	4.00	0.10
450.00	3.09	4.00	0.10
451.00	3.10	4.00	0.10
452.00	3.11	4.00	0.10
453.00	3.11	4.00	0.10
454.00	3.12	4.00	0.10
455.00	3.13	4.00	0.10
456.00	3.13	4.00	0.10
457.00	3.14	4.00	0.10
458.00	3.14	4.00	0.10
459.00	3.15	4.00	0.10
460.00	3.16	4.00	0.10
461.00	3.16	4.00	0.10
462.00	3.17	4.00	0.10
463.00	3.18	4.00	0.10
464.00	3.18	4.00	0.10
465.00	3.19	4.00	0.10
466.00	3.19	4.00	0.10
467.00	3.20	4.00	0.10
468.00	3.21	4.00	0.10
469.00	3.21	4.00	0.10
470.00	3.22	4.00	0.10
471.00	3.23	4.00	0.10
472.00	3.23	4.00	0.10
473.00	3.24	4.00	0.10
474.00	3.24	4.00	0.10
475.00	3.25	4.00	0.10
476.00	3.26	4.00	0.10
477.00	3.26	4.00	0.10
478.00	3.27	4.00	0.10
479.00	3.28	4.00	0.10

Measurements In Millimeters			
ID	±	CS	±
4.00 MM - CROSS SECTION			
480.00	3.28	4.00	0.10
481.00	3.29	4.00	0.10
482.00	3.30	4.00	0.10
483.00	3.30	4.00	0.10
484.00	3.31	4.00	0.10
485.00	3.31	4.00	0.10
486.00	3.32	4.00	0.10
487.00	3.33	4.00	0.10
488.00	3.33	4.00	0.10
489.00	3.34	4.00	0.10
490.00	3.35	4.00	0.10
491.00	3.35	4.00	0.10
492.00	3.36	4.00	0.10
493.00	3.36	4.00	0.10
494.00	3.37	4.00	0.10
495.00	3.38	4.00	0.10
496.00	3.38	4.00	0.10
497.00	3.39	4.00	0.10
498.00	3.40	4.00	0.10
499.00	3.40	4.00	0.10
500.00	3.41	4.00	0.10
525.00	3.56	4.00	0.10
530.00	3.60	4.00	0.10
540.00	3.66	4.00	0.10
550.00	3.72	4.00	0.10
560.00	3.78	4.00	0.10
5.00 MM - CROSS SECTION			
4.00	0.14	5.00	0.13
5.00	0.15	5.00	0.13
6.00	0.15	5.00	0.13
7.00	0.16	5.00	0.13
8.00	0.16	5.00	0.13
9.00	0.17	5.00	0.13
10.00	0.17	5.00	0.13
11.00	0.18	5.00	0.13
12.00	0.19	5.00	0.13
13.00	0.19	5.00	0.13
14.00	0.19	5.00	0.13
15.00	0.20	5.00	0.13
16.00	0.20	5.00	0.13
17.00	0.21	5.00	0.13
18.00	0.21	5.00	0.13
19.00	0.22	5.00	0.13
20.00	0.22	5.00	0.13
21.00	0.23	5.00	0.13
22.00	0.24	5.00	0.13
23.00	0.24	5.00	0.13
24.00	0.24	5.00	0.13
25.00	0.25	5.00	0.13
26.00	0.26	5.00	0.13
27.00	0.26	5.00	0.13
28.00	0.28	5.00	0.13
29.00	0.29	5.00	0.13
30.00	0.29	5.00	0.13
31.00	0.31	5.00	0.13
32.00	0.32	5.00	0.13
33.00	0.32	5.00	0.13
34.00	0.33	5.00	0.13
35.00	0.34	5.00	0.13
36.00	0.35	5.00	0.13
37.00	0.36	5.00	0.13
38.00	0.36	5.00	0.13

Compound information available on pages 20-37.

Surface Finish: ISO 4287 & Chamfer Information on pages 7-9.
For ISO tolerance charts, refer to pages 12-13.

MFPSEALS®
www.mfpseals.com

Metric O-Ring Sizes - Standard

Measurements In Millimeters				Measurements In Millimeters				Measurements In Millimeters				Measurements In Millimeters			
ID	±	CS	±	ID	±	CS	±	ID	±	CS	±	ID	±	CS	±
4.00 MM - CROSS SECTION				5.00 MM - CROSS SECTION				5.00 MM - CROSS SECTION				5.00 MM - CROSS SECTION			
39.00	0.37	5.00	0.13	102.00	0.84	5.00	0.13	165.00	1.26	5.00	0.13	228.00	1.67	5.00	0.13
40.00	0.38	5.00	0.13	103.00	0.85	5.00	0.13	166.00	1.27	5.00	0.13	229.00	1.68	5.00	0.13
41.00	0.39	5.00	0.13	104.00	0.85	5.00	0.13	167.00	1.27	5.00	0.13	230.00	1.69	5.00	0.13
42.00	0.40	5.00	0.13	105.00	0.86	5.00	0.13	168.00	1.28	5.00	0.13	231.00	1.69	5.00	0.13
43.00	0.40	5.00	0.13	106.00	0.87	5.00	0.13	169.00	1.29	5.00	0.13	232.00	1.70	5.00	0.13
44.00	0.41	5.00	0.13	107.00	0.87	5.00	0.13	170.00	1.29	5.00	0.13	233.00	1.71	5.00	0.13
45.00	0.42	5.00	0.13	108.00	0.88	5.00	0.13	171.00	1.30	5.00	0.13	234.00	1.71	5.00	0.13
46.00	0.43	5.00	0.13	109.00	0.89	5.00	0.13	172.00	1.31	5.00	0.13	235.00	1.72	5.00	0.13
47.00	0.44	5.00	0.13	110.00	0.89	5.00	0.13	173.00	1.31	5.00	0.13	236.00	1.73	5.00	0.13
48.00	0.44	5.00	0.13	111.00	0.90	5.00	0.13	174.00	1.32	5.00	0.13	237.00	1.73	5.00	0.13
49.00	0.45	5.00	0.13	112.00	0.91	5.00	0.13	175.00	1.33	5.00	0.13	238.00	1.74	5.00	0.13
50.00	0.46	5.00	0.13	113.00	0.91	5.00	0.13	176.00	1.33	5.00	0.13	239.00	1.75	5.00	0.13
51.00	0.47	5.00	0.13	114.00	0.92	5.00	0.13	177.00	1.34	5.00	0.13	240.00	1.75	5.00	0.13
52.00	0.47	5.00	0.13	115.00	0.93	5.00	0.13	178.00	1.35	5.00	0.13	241.00	1.76	5.00	0.13
53.00	0.48	5.00	0.13	116.00	0.93	5.00	0.13	179.00	1.35	5.00	0.13	242.00	1.77	5.00	0.13
54.00	0.50	5.00	0.13	117.00	0.94	5.00	0.13	180.00	1.36	5.00	0.13	243.00	1.77	5.00	0.13
55.00	0.50	5.00	0.13	118.00	0.95	5.00	0.13	181.00	1.37	5.00	0.13	244.00	1.78	5.00	0.13
56.00	0.51	5.00	0.13	119.00	0.95	5.00	0.13	182.00	1.37	5.00	0.13	245.00	1.78	5.00	0.13
57.00	0.52	5.00	0.13	120.00	0.96	5.00	0.13	183.00	1.38	5.00	0.13	246.00	1.79	5.00	0.13
58.00	0.52	5.00	0.13	121.00	0.97	5.00	0.13	184.00	1.39	5.00	0.13	247.00	1.80	5.00	0.13
59.00	0.54	5.00	0.13	122.00	0.97	5.00	0.13	185.00	1.39	5.00	0.13	248.00	1.80	5.00	0.13
60.00	0.54	5.00	0.13	123.00	0.98	5.00	0.13	186.00	1.40	5.00	0.13	249.00	1.81	5.00	0.13
61.00	0.55	5.00	0.13	124.00	0.99	5.00	0.13	187.00	1.41	5.00	0.13	250.00	1.82	5.00	0.13
62.00	0.55	5.00	0.13	125.00	0.99	5.00	0.13	188.00	1.41	5.00	0.13	251.00	1.82	5.00	0.13
63.00	0.56	5.00	0.13	126.00	1.00	5.00	0.13	189.00	1.42	5.00	0.13	252.00	1.83	5.00	0.13
64.00	0.58	5.00	0.13	127.00	1.01	5.00	0.13	190.00	1.43	5.00	0.13	253.00	1.84	5.00	0.13
65.00	0.58	5.00	0.13	128.00	1.01	5.00	0.13	191.00	1.43	5.00	0.13	254.00	1.84	5.00	0.13
66.00	0.59	5.00	0.13	129.00	1.02	5.00	0.13	192.00	1.44	5.00	0.13	255.00	1.85	5.00	0.13
67.00	0.59	5.00	0.13	130.00	1.03	5.00	0.13	193.00	1.45	5.00	0.13	256.00	1.86	5.00	0.13
68.00	0.61	5.00	0.13	131.00	1.03	5.00	0.13	194.00	1.45	5.00	0.13	257.00	1.86	5.00	0.13
69.00	0.61	5.00	0.13	132.00	1.04	5.00	0.13	195.00	1.46	5.00	0.13	258.00	1.87	5.00	0.13
70.00	0.62	5.00	0.13	133.00	1.05	5.00	0.13	196.00	1.46	5.00	0.13	259.00	1.88	5.00	0.13
71.00	0.63	5.00	0.13	134.00	1.05	5.00	0.13	197.00	1.47	5.00	0.13	260.00	1.88	5.00	0.13
72.00	0.63	5.00	0.13	135.00	1.06	5.00	0.13	198.00	1.48	5.00	0.13	261.00	1.89	5.00	0.13
73.00	0.64	5.00	0.13	136.00	1.07	5.00	0.13	199.00	1.48	5.00	0.13	262.00	1.89	5.00	0.13
74.00	0.65	5.00	0.13	137.00	1.07	5.00	0.13	200.00	1.49	5.00	0.13	263.00	1.90	5.00	0.13
75.00	0.65	5.00	0.13	138.00	1.08	5.00	0.13	201.00	1.50	5.00	0.13	264.00	1.91	5.00	0.13
76.00	0.66	5.00	0.13	139.00	1.09	5.00	0.13	202.00	1.50	5.00	0.13	265.00	1.91	5.00	0.13
77.00	0.67	5.00	0.13	140.00	1.09	5.00	0.13	203.00	1.51	5.00	0.13	266.00	1.92	5.00	0.13
78.00	0.67	5.00	0.13	141.00	1.10	5.00	0.13	204.00	1.52	5.00	0.13	267.00	1.93	5.00	0.13
79.00	0.68	5.00	0.13	142.00	1.11	5.00	0.13	205.00	1.52	5.00	0.13	268.00	1.93	5.00	0.13
80.00	0.69	5.00	0.13	143.00	1.11	5.00	0.13	206.00	1.53	5.00	0.13	269.00	1.94	5.00	0.13
81.00	0.69	5.00	0.13	144.00	1.12	5.00	0.13	207.00	1.54	5.00	0.13	270.00	1.95	5.00	0.13
82.00	0.70	5.00	0.13	145.00	1.13	5.00	0.13	208.00	1.54	5.00	0.13	271.00	1.95	5.00	0.13
83.00	0.71	5.00	0.13	146.00	1.13	5.00	0.13	209.00	1.55	5.00	0.13	272.00	1.96	5.00	0.13
84.00	0.72	5.00	0.13	147.00	1.14	5.00	0.13	210.00	1.56	5.00	0.13	273.00	1.97	5.00	0.13
85.00	0.72	5.00	0.13	148.00	1.15	5.00	0.13	211.00	1.56	5.00	0.13	274.00	1.97	5.00	0.13
86.00	0.73	5.00	0.13	149.00	1.15	5.00	0.13	212.00	1.57	5.00	0.13	275.00	1.98	5.00	0.13
87.00	0.74	5.00	0.13	150.00	1.16	5.00	0.13	213.00	1.58	5.00	0.13	276.00	1.99	5.00	0.13
88.00	0.74	5.00	0.13	151.00	1.17	5.00	0.13	214.00	1.58	5.00	0.13	277.00	1.99	5.00	0.13
89.00	0.75	5.00	0.13	152.00	1.17	5.00	0.13	215.00	1.59	5.00	0.13	278.00	2.00	5.00	0.13
90.00	0.76	5.00	0.13	153.00	1.18	5.00	0.13	216.00	1.60	5.00	0.13	279.00	2.00	5.00	0.13
91.00	0.76	5.00	0.13	154.00	1.19	5.00	0.13	217.00	1.60	5.00	0.13	280.00	2.01	5.00	0.13
92.00	0.77	5.00	0.13	155.00	1.19	5.00	0.13	218.00	1.61	5.00	0.13	281.00	2.02	5.00	0.13
93.00	0.78	5.00	0.13	156.00	1.20	5.00	0.13	219.00	1.62	5.00	0.13	282.00	2.02	5.00	0.13
94.00	0.78	5.00	0.13	157.00	1.21	5.00	0.13	220.00	1.62	5.00	0.13	283.00	2.03	5.00	0.13
95.00	0.79	5.00	0.13	158.00	1.21	5.00	0.13	221.00	1.63	5.00	0.13	284.00	2.04	5.00	0.13
96.00	0.80	5.00	0.13	159.00	1.22	5.00	0.13	222.00	1.64	5.00	0.13	285.00	2.04	5.00	0.13
97.00	0.80	5.00	0.13	160.00	1.23	5.00	0.13	223.00	1.64	5.00	0.13	286.00	2.05	5.00	0.13
98.00	0.81	5.00	0.13	161.00	1.23	5.00	0.13	224.00	1.65	5.00	0.13	287.00	2.06	5.00	0.13
99.00	0.82	5.00	0.13	162.00	1.24	5.00	0.13	225.00	1.65	5.00	0.13	288.00	2.06	5.00	0.13
100.00	0.82	5.00	0.13	163.00	1.25	5.00	0.13	226.00	1.66	5.00	0.13	289.00	2.07	5.00	0.13
101.00	0.83	5.00	0.13	164.00	1.25	5.00	0.13	227.00	1.67	5.00	0.13	290.00	2.08	5.00	0.13

Surface Finish: ISO 4287 & Chamfer Information on pages 7-9.
For ISO tolerance charts, refer to pages 12-13.

Compound information available on pages 20-37.

Metric O-Ring Sizes - Standard

MFPSEALS
www.mfpseals.com

Measurements In Millimeters			
ID	±	CS	±
5.00 MM - CROSS SECTION			
291.00	2.08	5.00	0.13
292.00	2.09	5.00	0.13
293.00	2.10	5.00	0.13
294.00	2.10	5.00	0.13
295.00	2.11	5.00	0.13
296.00	2.11	5.00	0.13
297.00	2.12	5.00	0.13
298.00	2.13	5.00	0.13
299.00	2.13	5.00	0.13
300.00	2.14	5.00	0.13
301.00	2.15	5.00	0.13
302.00	2.15	5.00	0.13
303.00	2.16	5.00	0.13
304.00	2.17	5.00	0.13
305.00	2.17	5.00	0.13
306.00	2.18	5.00	0.13
307.00	2.19	5.00	0.13
308.00	2.19	5.00	0.13
309.00	2.20	5.00	0.13
310.00	2.20	5.00	0.13
311.00	2.21	5.00	0.13
312.00	2.22	5.00	0.13
313.00	2.22	5.00	0.13
314.00	2.23	5.00	0.13
315.00	2.24	5.00	0.13
316.00	2.24	5.00	0.13
317.00	2.25	5.00	0.13
318.00	2.26	5.00	0.13
319.00	2.26	5.00	0.13
320.00	2.27	5.00	0.13
321.00	2.27	5.00	0.13
322.00	2.28	5.00	0.13
323.00	2.29	5.00	0.13
324.00	2.29	5.00	0.13
325.00	2.30	5.00	0.13
326.00	2.31	5.00	0.13
327.00	2.31	5.00	0.13
328.00	2.32	5.00	0.13
329.00	2.33	5.00	0.13
330.00	2.33	5.00	0.13
331.00	2.34	5.00	0.13
332.00	2.35	5.00	0.13
333.00	2.35	5.00	0.13
334.00	2.36	5.00	0.13
335.00	2.36	5.00	0.13
336.00	2.37	5.00	0.13
337.00	2.38	5.00	0.13
338.00	2.38	5.00	0.13
339.00	2.39	5.00	0.13
340.00	2.40	5.00	0.13
341.00	2.40	5.00	0.13
342.00	2.41	5.00	0.13
343.00	2.42	5.00	0.13
344.00	2.42	5.00	0.13
345.00	2.43	5.00	0.13
346.00	2.43	5.00	0.13
347.00	2.44	5.00	0.13
348.00	2.45	5.00	0.13
349.00	2.45	5.00	0.13
350.00	2.46	5.00	0.13
351.00	2.47	5.00	0.13
352.00	2.47	5.00	0.13
353.00	2.48	5.00	0.13

Measurements In Millimeters			
ID	±	CS	±
5.00 MM - CROSS SECTION			
354.00	2.49	5.00	0.13
355.00	2.49	5.00	0.13
356.00	2.50	5.00	0.13
357.00	2.50	5.00	0.13
358.00	2.51	5.00	0.13
359.00	2.52	5.00	0.13
360.00	2.52	5.00	0.13
361.00	2.53	5.00	0.13
362.00	2.54	5.00	0.13
363.00	2.54	5.00	0.13
364.00	2.55	5.00	0.13
365.00	2.56	5.00	0.13
366.00	2.56	5.00	0.13
367.00	2.57	5.00	0.13
368.00	2.57	5.00	0.13
369.00	2.58	5.00	0.13
370.00	2.59	5.00	0.13
371.00	2.59	5.00	0.13
372.00	2.60	5.00	0.13
373.00	2.61	5.00	0.13
374.00	2.61	5.00	0.13
375.00	2.62	5.00	0.13
376.00	2.63	5.00	0.13
377.00	2.63	5.00	0.13
378.00	2.64	5.00	0.13
379.00	2.64	5.00	0.13
380.00	2.65	5.00	0.13
381.00	2.66	5.00	0.13
382.00	2.66	5.00	0.13
383.00	2.67	5.00	0.13
384.00	2.68	5.00	0.13
385.00	2.68	5.00	0.13
386.00	2.69	5.00	0.13
387.00	2.70	5.00	0.13
388.00	2.70	5.00	0.13
389.00	2.71	5.00	0.13
390.00	2.71	5.00	0.13
391.00	2.72	5.00	0.13
392.00	2.73	5.00	0.13
393.00	2.73	5.00	0.13
394.00	2.74	5.00	0.13
395.00	2.75	5.00	0.13
396.00	2.75	5.00	0.13
397.00	2.76	5.00	0.13
398.00	2.77	5.00	0.13
399.00	2.77	5.00	0.13
400.00	2.78	5.00	0.13
405.00	2.81	5.00	0.13
410.00	2.84	5.00	0.13
415.00	2.87	5.00	0.13
420.00	2.90	5.00	0.13
425.00	2.94	5.00	0.13
430.00	2.97	5.00	0.13
435.00	3.00	5.00	0.13
440.00	3.03	5.00	0.13
445.00	3.06	5.00	0.13
450.00	3.09	5.00	0.13
455.00	3.13	5.00	0.13
460.00	3.16	5.00	0.13
465.00	3.19	5.00	0.13
470.00	3.22	5.00	0.13
475.00	3.25	5.00	0.13
480.00	3.28	5.00	0.13

Measurements In Millimeters			
ID	±	CS	±
5.00 MM - CROSS SECTION			
485.00	3.31	5.00	0.13
490.00	3.35	5.00	0.13
495.00	3.38	5.00	0.13
500.00	3.41	5.00	0.13
505.00	3.44	5.00	0.13
510.00	3.47	5.00	0.13
515.00	3.50	5.00	0.13
520.00	3.53	5.00	0.13
525.00	3.56	5.00	0.13
530.00	3.60	5.00	0.13
535.00	3.63	5.00	0.13
540.00	3.66	5.00	0.13
545.00	3.69	5.00	0.13
550.00	3.72	5.00	0.13
555.00	3.75	5.00	0.13
560.00	3.78	5.00	0.13
565.00	3.81	5.00	0.13
570.00	3.85	5.00	0.13
575.00	3.88	5.00	0.13
580.00	3.91	5.00	0.13
585.00	3.93	5.00	0.13
590.00	3.97	5.00	0.13
595.00	4.00	5.00	0.13
600.00	4.03	5.00	0.13
6.00 MM - CROSS SECTION			
20.00	0.26	6.00	0.15
25.00	0.30	6.00	0.15
30.00	0.34	6.00	0.15
35.00	0.37	6.00	0.15
40.00	0.41	6.00	0.15
45.00	0.44	6.00	0.15
50.00	0.48	6.00	0.15
55.00	0.52	6.00	0.15
60.00	0.55	6.00	0.15
65.00	0.58	6.00	0.15
70.00	0.62	6.00	0.15
75.00	0.65	6.00	0.15
80.00	0.69	6.00	0.15
85.00	0.72	6.00	0.15
90.00	0.76	6.00	0.15
95.00	0.79	6.00	0.15
100.00	0.82	6.00	0.15
105.00	0.86	6.00	0.15
110.00	0.89	6.00	0.15
115.00	0.93	6.00	0.15
120.00	0.96	6.00	0.15
125.00	0.99	6.00	0.15
130.00	1.03	6.00	0.15
135.00	1.06	6.00	0.15
140.00	1.09	6.00	0.15
145.00	1.13	6.00	0.15
150.00	1.16	6.00	0.15
155.00	1.19	6.00	0.15
160.00	1.23	6.00	0.15
165.00	1.26	6.00	0.15
170.00	1.29	6.00	0.15
175.00	1.33	6.00	0.15
180.00	1.36	6.00	0.15
185.00	1.39	6.00	0.15
190.00	1.43	6.00	0.15
195.00	1.46	6.00	0.15
200.00	1.49	6.00	0.15

Measurements In Millimeters			
ID	±	CS	±
6.00 MM - CROSS SECTION			
205.00	1.52	6.00	0.15
210.00	1.56	6.00	0.15
215.00	1.59	6.00	0.15
220.00	1.62	6.00	0.15
225.00	1.65	6.00	0.15
230.00	1.69	6.00	0.15
235.00	1.72	6.00	0.15
240.00	1.75	6.00	0.15
245.00	1.78	6.00	0.15
250.00	1.82	6.00	0.15
260.00	1.88	6.00	0.15
270.00	1.95	6.00	0.15
275.00	1.98	6.00	0.15
280.00	2.01	6.00	0.15
295.00	2.11	6.00	0.15
300.00	2.14	6.00	0.15
310.00	2.20	6.00	0.15
320.00	2.27	6.00	0.15
325.00	2.30	6.00	0.15
330.00	2.33	6.00	0.15
340.00	2.40	6.00	0.15
350.00	2.46	6.00	0.15
360.00	2.52	6.00	0.15
375.00	2.62	6.00	0.15
380.00	2.65	6.00	0.15
400.00	2.78	6.00	0.15
410.00	2.84	6.00	0.15
425.00	2.94	6.00	0.15
450.00	3.09	6.00	0.15
460.00	3.16	6.00	0.15
470.00	3.22	6.00	0.15
475.00	3.25	6.00	0.15
490.00	3.35	6.00	0.15
500.00	3.41	6.00	0.15
525.00	3.56	6.00	0.15
550.00	3.72	6.00	0.15
555.00	3.75	6.00	0.15
575.00	3.88	6.00	0.15
600.00	4.03	6.00	0.15

Compound information available on pages 20-37.

Surface Finish: ISO 4287 & Chamfer Information on pages 7-9.
For ISO tolerance charts, refer to pages 12-13.

MFPSEALS
www.mfpseals.com

Metric O-Ring Sizes - SMS 1586

Measurements In Millimeters				Measurements In Inches			
ID	±	CS	±	ID	±	CS	±
1.6 MM - CROSS SECTION							
3.1	0.14	1.6	0.08	0.122	0.006	0.063	0.003
4.1	0.14	1.6	0.08	0.161	0.006	0.063	0.003
5.1	0.15	1.6	0.08	0.201	0.006	0.063	0.003
6.1	0.16	1.6	0.08	0.24	0.006	0.063	0.003
7.1	0.17	1.6	0.08	0.28	0.007	0.063	0.003
8.1	0.18	1.6	0.08	0.319	0.007	0.063	0.003
9.1	0.18	1.6	0.08	0.358	0.007	0.063	0.003
10.1	0.19	1.6	0.08	0.398	0.007	0.063	0.003
11.1	0.2	1.6	0.08	0.437	0.008	0.063	0.003
12.1	0.21	1.6	0.08	0.476	0.008	0.063	0.003
13.1	0.21	1.6	0.08	0.516	0.008	0.063	0.003
14.1	0.22	1.6	0.08	0.555	0.009	0.063	0.003
15.1	0.23	1.6	0.08	0.594	0.009	0.063	0.003
16.1	0.24	1.6	0.08	0.634	0.009	0.063	0.003
17.1	0.24	1.6	0.08	0.673	0.009	0.063	0.003
18.1	0.25	1.6	0.08	0.713	0.01	0.063	0.003
19.1	0.26	1.6	0.08	0.752	0.01	0.063	0.003
20.1	0.27	1.6	0.08	0.791	0.011	0.063	0.003
21.1	0.27	1.6	0.08	0.831	0.011	0.063	0.003
22.1	0.28	1.6	0.08	0.87	0.011	0.063	0.003
25.1	0.3	1.6	0.08	0.988	0.012	0.063	0.003
27.1	0.32	1.6	0.08	1.067	0.013	0.063	0.003
29.1	0.33	1.6	0.08	1.146	0.013	0.063	0.003
32.1	0.35	1.6	0.08	1.264	0.014	0.063	0.003
35.1	0.37	1.6	0.08	1.382	0.015	0.063	0.003
37.1	0.39	1.6	0.08	1.461	0.015	0.063	0.003
2.4 MM - CROSS SECTION							
3.3	0.14	2.4	0.09	0.13	0.006	0.094	0.004
4.3	0.15	2.4	0.09	0.169	0.006	0.094	0.004
5.3	0.15	2.4	0.09	0.209	0.006	0.094	0.004
6.3	0.16	2.4	0.09	0.248	0.006	0.094	0.004
7.3	0.17	2.4	0.09	0.287	0.007	0.094	0.004
8.3	0.18	2.4	0.09	0.327	0.007	0.094	0.004
9.3	0.18	2.4	0.09	0.366	0.007	0.094	0.004
10.3	0.19	2.4	0.09	0.406	0.007	0.094	0.004
11.3	0.2	2.4	0.09	0.445	0.008	0.094	0.004
12.3	0.21	2.4	0.09	0.484	0.008	0.094	0.004
13.3	0.22	2.4	0.09	0.524	0.009	0.094	0.004
14.3	0.22	2.4	0.09	0.563	0.009	0.094	0.004
15.3	0.23	2.4	0.09	0.602	0.009	0.094	0.004
16.3	0.24	2.4	0.09	0.642	0.009	0.094	0.004
17.3	0.25	2.4	0.09	0.681	0.01	0.094	0.004
18.3	0.25	2.4	0.09	0.72	0.01	0.094	0.004
19.3	0.26	2.4	0.09	0.76	0.01	0.094	0.004
20.3	0.27	2.4	0.09	0.799	0.011	0.094	0.004
21.3	0.27	2.4	0.09	0.839	0.011	0.094	0.004
22.3	0.28	2.4	0.09	0.878	0.011	0.094	0.004
23.3	0.29	2.4	0.09	0.917	0.011	0.094	0.004
25.3	0.3	2.4	0.09	0.996	0.012	0.094	0.004
27.3	0.32	2.4	0.09	1.075	0.013	0.094	0.004
30.3	0.34	2.4	0.09	1.193	0.013	0.094	0.004
33.3	0.36	2.4	0.09	1.311	0.014	0.094	0.004
3 MM - CROSS SECTION							
17.2	0.24	3	0.09	0.677	0.009	0.118	0.004
18.2	0.25	3	0.09	0.717	0.01	0.118	0.004
19.2	0.26	3	0.09	0.756	0.01	0.118	0.004
20.2	0.27	3	0.09	0.795	0.011	0.118	0.004
21.2	0.27	3	0.09	0.835	0.011	0.118	0.004
22.2	0.28	3	0.09	0.874	0.011	0.118	0.004
24.2	0.3	3	0.09	0.953	0.012	0.118	0.004
25.2	0.3	3	0.09	0.992	0.012	0.118	0.004

Measurements In Millimeters				Measurements In Inches			
ID	±	CS	±	ID	±	CS	±
3 MM - CROSS SECTION							
26.2	0.31	3	0.09	1.031	0.012	0.118	0.004
28.2	0.32	3	0.09	1.11	0.013	0.118	0.004
29.2	0.33	3	0.09	1.15	0.013	0.118	0.004
30.2	0.34	3	0.09	1.189	0.013	0.118	0.004
31.2	0.35	3	0.09	1.228	0.014	0.118	0.004
32.2	0.35	3	0.09	1.268	0.014	0.118	0.004
34.2	0.37	3	0.09	1.346	0.015	0.118	0.004
35.2	0.38	3	0.09	1.386	0.015	0.118	0.004
36.2	0.38	3	0.09	1.425	0.015	0.118	0.004
37.2	0.39	3	0.09	1.465	0.015	0.118	0.004
39.2	0.4	3	0.09	1.543	0.016	0.118	0.004
40.2	0.41	3	0.09	1.583	0.016	0.118	0.004
42.2	0.42	3	0.09	1.661	0.017	0.118	0.004
44.2	0.44	3	0.09	1.74	0.017	0.118	0.004
45.2	0.45	3	0.09	1.78	0.018	0.118	0.004
46.2	0.45	3	0.09	1.819	0.018	0.118	0.004
49.5	0.48	3	0.09	1.949	0.019	0.118	0.004
50.2	0.48	3	0.09	1.976	0.019	0.118	0.004
54.5	0.51	3	0.09	2.146	0.02	0.118	0.004
55.2	0.52	3	0.09	2.173	0.02	0.118	0.004
56.2	0.52	3	0.09	2.213	0.02	0.118	0.004
57.2	0.53	3	0.09	2.252	0.021	0.118	0.004
59.5	0.55	3	0.09	2.343	0.022	0.118	0.004
60.5	0.55	3	0.09	2.382	0.022	0.118	0.004
62.2	0.57	3	0.09	2.449	0.022	0.118	0.004
64.5	0.58	3	0.09	2.539	0.023	0.118	0.004
69.5	0.62	3	0.09	2.736	0.024	0.118	0.004
74.5	0.65	3	0.09	2.933	0.026	0.118	0.004
79.5	0.68	3	0.09	3.13	0.027	0.118	0.004
84.5	0.72	3	0.09	3.327	0.028	0.118	0.004
89.5	0.75	3	0.09	3.524	0.03	0.118	0.004
94.5	0.79	3	0.09	3.72	0.031	0.118	0.004
99.5	0.82	3	0.09	3.917	0.032	0.118	0.004
104.5	0.86	3	0.09	4.114	0.034	0.118	0.004
109.5	0.89	3	0.09	4.311	0.035	0.118	0.004
114.5	0.92	3	0.09	4.508	0.036	0.118	0.004
119.5	0.96	3	0.09	4.705	0.038	0.118	0.004
124.5	0.99	3	0.09	4.902	0.039	0.118	0.004
129.5	1.02	3	0.09	5.098	0.04	0.118	0.004
134.5	1.06	3	0.09	5.295	0.042	0.118	0.004
139.5	1.09	3	0.09	5.492	0.043	0.118	0.004
144.5	1.12	3	0.09	5.689	0.044	0.118	0.004
5.7 MM - CROSS SECTION							
35.2	0.38	5.7	0.13	1.386	0.015	0.224	0.005
36.2	0.38	5.7	0.13	1.425	0.015	0.224	0.005
37.2	0.39	5.7	0.13	1.465	0.015	0.224	0.005
39.2	0.4	5.7	0.13	1.543	0.016	0.224	0.005
41.2	0.42	5.7	0.13	1.622	0.017	0.224	0.005
44.2	0.44	5.7	0.13	1.74	0.017	0.224	0.005
45.2	0.45	5.7	0.13	1.78	0.018	0.224	0.005
47.2	0.46	5.7	0.13	1.858	0.018	0.224	0.005
49.2	0.47	5.7	0.13	1.937	0.019	0.224	0.005
51.2	0.49	5.7	0.13	2.016	0.019	0.224	0.005
52.2	0.5	5.7	0.13	2.055	0.02	0.224	0.005
54.2	0.51	5.7	0.13	2.134	0.02	0.224	0.005
57.2	0.53	5.7	0.13	2.252	0.021	0.224	0.005
59.2	0.54	5.7	0.13	2.331	0.021	0.224	0.005
61.2	0.56	5.7	0.13	2.409	0.022	0.224	0.005
62.2	0.57	5.7	0.13	2.449	0.022	0.224	0.005
64.2	0.58	5.7	0.13	2.528	0.023	0.224	0.005
67.2	0.6	5.7	0.13	2.646	0.024	0.224	0.005
69.2	0.61	5.7	0.13	2.724	0.024	0.224	0.005

Surface Finish: ISO 4287 & Chamfer Information on pages 7-9.
For ISO tolerance charts, refer to pages 12-13.

Compound information available on pages 20-37.

Metric O-Ring Sizes - SMS 1586

MFPSEALS
www.mfpseals.com

Measurements In Millimeters				Measurements In Inches			
ID	±	CS	±	ID	±	CS	±
5.7 MM - CROSS SECTION							
71.2	0.63	5.7	0.13	2.803	0.025	0.224	0.005
72.2	0.63	5.7	0.13	2.843	0.025	0.224	0.005
74.2	0.65	5.7	0.13	2.921	0.026	0.224	0.005
77.2	0.67	5.7	0.13	3.039	0.026	0.224	0.005
79.2	0.68	5.7	0.13	3.118	0.027	0.224	0.005
81.2	0.7	5.7	0.13	3.197	0.028	0.224	0.005
82.2	0.7	5.7	0.13	3.236	0.028	0.224	0.005
84.2	0.72	5.7	0.13	3.315	0.028	0.224	0.005
87.2	0.74	5.7	0.13	3.433	0.029	0.224	0.005
89.2	0.75	5.7	0.13	3.512	0.03	0.224	0.005
92.2	0.77	5.7	0.13	3.63	0.03	0.224	0.005
94.2	0.79	5.7	0.13	3.709	0.031	0.224	0.005
97.2	0.81	5.7	0.13	3.827	0.032	0.224	0.005
99.2	0.82	5.7	0.13	3.906	0.032	0.224	0.005
104.2	0.85	5.7	0.13	4.102	0.033	0.224	0.005
109.2	0.89	5.7	0.13	4.299	0.035	0.224	0.005
114.2	0.92	5.7	0.13	4.496	0.036	0.224	0.005
119.2	0.95	5.7	0.13	4.693	0.037	0.224	0.005
124.2	0.99	5.7	0.13	4.89	0.039	0.224	0.005
129.2	1.02	5.7	0.13	5.087	0.04	0.224	0.005
134.2	1.06	5.7	0.13	5.283	0.042	0.224	0.005
139.2	1.09	5.7	0.13	5.48	0.043	0.224	0.005
144.2	1.12	5.7	0.13	5.677	0.044	0.224	0.005
149.2	1.16	5.7	0.13	5.874	0.046	0.224	0.005
154.2	1.19	5.7	0.13	6.071	0.047	0.224	0.005
159.2	1.22	5.7	0.13	6.268	0.048	0.224	0.005
164.2	1.26	5.7	0.13	6.465	0.05	0.224	0.005
169.2	1.29	5.7	0.13	6.661	0.051	0.224	0.005
174.2	1.32	5.7	0.13	6.858	0.052	0.224	0.005
179.2	1.35	5.7	0.13	7.055	0.053	0.224	0.005
184.2	1.39	5.7	0.13	7.252	0.055	0.224	0.005
189.2	1.42	5.7	0.13	7.449	0.056	0.224	0.005
194.2	1.45	5.7	0.13	7.646	0.057	0.224	0.005
199.2	1.49	5.7	0.13	7.843	0.059	0.224	0.005
204.2	1.52	5.7	0.13	8.039	0.06	0.224	0.005
209.2	1.55	5.7	0.13	8.236	0.061	0.224	0.005
219.2	1.62	5.7	0.13	8.63	0.064	0.224	0.005
229.2	1.68	5.7	0.13	9.024	0.066	0.224	0.005
239.2	1.75	5.7	0.13	9.417	0.069	0.224	0.005
249.2	1.81	5.7	0.13	9.811	0.071	0.224	0.005
259.2	1.88	5.7	0.13	10.205	0.074	0.224	0.005
269.2	1.94	5.7	0.13	10.598	0.076	0.224	0.005
279.2	2.01	5.7	0.13	10.992	0.079	0.224	0.005
289.2	2.07	5.7	0.13	11.386	0.081	0.224	0.005
299.2	2.13	5.7	0.13	11.78	0.084	0.224	0.005
319.2	2.26	5.7	0.13	12.567	0.089	0.224	0.005
339.2	2.39	5.7	0.13	13.354	0.094	0.224	0.005
359.2	2.52	5.7	0.13	14.142	0.099	0.224	0.005
379.2	2.65	5.7	0.13	14.929	0.104	0.224	0.005
399.2	2.77	5.7	0.13	15.717	0.109	0.224	0.005
419.2	2.9	5.7	0.13	16.504	0.114	0.224	0.005
439.2	3.03	5.7	0.13	17.291	0.119	0.224	0.005
459.2	3.15	5.7	0.13	18.079	0.124	0.224	0.005
479.2	3.28	5.7	0.13	18.866	0.129	0.224	0.005
499.2	3.4	5.7	0.13	19.654	0.134	0.224	0.005

Measurements In Millimeters				Measurements In Inches			
ID	±	CS	±	ID	±	CS	±
8.4 MM - CROSS SECTION							
144.1	1.12	8.4	0.15	5.673	0.044	0.331	0.006
149.1	1.15	8.4	0.15	5.87	0.045	0.331	0.006
154.1	1.19	8.4	0.15	6.067	0.047	0.331	0.006
159.1	1.22	8.4	0.15	6.264	0.048	0.331	0.006
164.1	1.25	8.4	0.15	6.461	0.049	0.331	0.006
169.1	1.29	8.4	0.15	6.657	0.051	0.331	0.006
174.1	1.32	8.4	0.15	6.854	0.052	0.331	0.006
179.1	1.35	8.4	0.15	7.051	0.053	0.331	0.006
184.1	1.39	8.4	0.15	7.248	0.055	0.331	0.006
189.1	1.42	8.4	0.15	7.445	0.056	0.331	0.006
194.1	1.45	8.4	0.15	7.642	0.057	0.331	0.006
199.1	1.49	8.4	0.15	7.839	0.059	0.331	0.006
209.1	1.55	8.4	0.15	8.232	0.061	0.331	0.006
219.1	1.62	8.4	0.15	8.626	0.064	0.331	0.006
229.1	1.68	8.4	0.15	9.02	0.066	0.331	0.006
239.1	1.75	8.4	0.15	9.413	0.069	0.331	0.006
249.1	1.81	8.4	0.15	9.807	0.071	0.331	0.006

Compound information available on pages 20-37.

Surface Finish: ISO 4287 & Chamfer Information on pages 7-9.
For ISO tolerance charts, refer to pages 12-13.

MFPSEALS
www.mfpseals.com

Metric O-Rings

A product of MFP Seals.

METRIC - O-RINGS

MFP Seals produces O-Rings in inch and metric sizes. The metric sizes are available in BS2518, GB/T 3452.1, J.I.S. B2401, SMS1586, and standard metric measurements. MFP Seals stocks O-Rings in a wide range of materials. A listing of available materials appears below.

This information is only to be used as a guide to the selection of seal compounds. Application, as well as temperature, pressures, media, and finishes, should all be considered when choosing seal compounds. Other compounds are available.

MFP PART NUMBER

MOR-1.0x001.5N6001

SEAL TYPE | CROSS SECTION | ID | COMPOUND

COMPOUNDS FORMULATED FOR O-RINGS

Compound Name	Designation	Hardness	Color	Temperature Range	
E7101	EPDM	70 Shore A	Black	-50°C to +100°C	(-58°F to +212°F)
E7102	EPDM	80 Shore A	Black	-50°C to +100°C	(-58°F to +212°F)
E7103 (NSF61)	EPDM	70 Shore A	Black	-50°C to +100°C	(-58°F to +212°F)
E7105 (WRAS/NSF61)	EPDM	70 Shore A	Black	-50°C to +150°C	(-58°F to +302°F)
FC7500 - Fluorochem®	FKME	75 Shore A	Black	-22°C to +250°C	(-7°F to +482°F)
FC7510 - Fluorochem®	FKM	75 Shore A	Black	-20°C to +200°C	(-4°F to +392°F)
FC7525 - Fluorochem®	FFKM	75 Shore A	Black	-15°C to +320°C	(+5°F to +608°F)
FC7550 - Fluorochem®	FFKM	75 Shore A	White	-15°C to +320°C	(+5°F to +608°F)
FC7575 - Fluorochem®	FFKM	90 Shore A	Black	-15°C to +320°C	(+5°F to +608°F)
FC7600 - Fluorochem®	FFKM	90 Shore A	Black	0°C to +260°C	(+32°F to +500°F)
FC7625 - Fluorochem®	FFKM	90 Shore A	Black	-4°C to +230°C	(+25°F to +446°F)
FC7650 - Fluorochem®	FFKM	70 Shore A	Black	-20°C to +230°C	(-4°F to +446°F)
FC7675 - Fluorochem®	FFKM	75 Shore A	Black	-4°C to +230°C	(+25°F to +446°F)
FC7700 - Fluorochem®	FFKM	75 Shore A	Black	-7°C to +230°C	(+20°F to +446°F)
FC7725 - Fluorochem®	FFKM	75 Shore A	White	-7°C to +230°C	(+20°F to +446°F)
FC7750 - Fluorochem®	FFKM	75 Shore A	Black	-6°C to +300°C	(+21°F to +570°F)
FC7775 - Fluorochem®	FFKM	75 Shore A	Black	-7°C to +230°C	(+20°F to +446°F)
FC7800 - Fluorochem®	FFKM	75 Shore A	Black	-5°C to +320°C	(+23°F to +608°F)
FS7101	FVMQ	70 Shore A	Blue	-60°C to +200°C	(-76°F to +392°F)
N6001	NBR	70 Shore A	Black	-40°C to +100°C	(-40°F to +212°F)
N6003	NBR	90 Shore A	Black	-20°C to +100°C	(-4°F to +212°F)
N6007	HNBR	70 Shore A	Black	-40°C to +125°C	(-40°F to +257°F)
N6008	HNBR	80 Shore A	Black	-35°C to +150°C	(-31°F to +302°F)
N6009	HNBR	90 Shore A	Black	-30°C to +150°C	(-22°F to +302°F)
N6010	HNBR	70 Shore A	Green	-40°C to +150°C	(-40°F to +302°F)
N6011	HNBR	80 Shore A	Green	-25°C to +150°C	(-13°F to +302°F)
N6012	HNBR	90 Shore A	Green	-20°C to +150°C	(-4°F to +302°F)
S7100*	SIL	70 Shore A	Rust Red	-55°C to +240°C	(-67°F to +464°F)

List continues on next page.

*This information is only to be used as a guide to the selection of seal compounds. Application, as well as temperature, pressures, media, and finishes, should all be considered when choosing seal compounds. Other compounds may be available based on application. This is not a complete list of available compounds. For more information contact MFP Seals at sales@mfpseals.com or (248) 585-8170. Fluorochem® (2012) and Ultraflex® (2011) are registered trademarks of Martin Fluid Power Co., Inc. *FDA Grade w/o Certification. AFLAS® is a registered trademark of the Asahi Glass Co., Ltd.*

RETURN TO INDEX

COMPOUNDS FORMULATED FOR O-RINGS

Compound Name	Designation	Hardness	Color	Temperature Range	
V1125 - Aflas®	FKM	80 Shore A	Black	-0°C to +230°C	(+32°F to +446°F)
V7100	FKM	75 Shore A	Black	-20°C to +200°C	(-4°F to +392°F)
V7125	FKM	75 Shore A	Black	-15°C to +200°C	(+5°F to +392°F)
V7150	FKM	75 Shore A	Black	-15°C to +200°C	(+5°F to +392°F)
V7155	FKM	75 Shore A	Brown	-15°C to +200°C	(+5°F to +392°F)
V7165	FKM	90 Shore A	Black	-20°C to +200°C	(-4°F to +392°F)
V7175	FKM	90 Shore A	Black	-10°C to +200°C	(+14°F to +392°F)
V7200	FKM	90 Shore A	Black	-30°C to +250°C	(-22°F to +482°F)
V7250	FKM	75 Shore A	Green	-15°C to +200°C	(+5°F to +392°F)
V7325 (AMS-R-83485)	FKM-GLT	75 Shore A	Black	-40°C to +200°C	(-40°F to +392°F)
V7350	FEPM	90 Shore A	Black	-20°C to +220°C	(-4°F to +428°F)

RETURN TO AD INDEX

Now that's an O-Ring!

NO MAX DIAMETER

The SMALLEST O-Ring that can be produced with this process:

C/S: 0.103 in. (2.62 mm)

I.D.: 7.874 in. (200 mm)

Minimum Order: One

Physical and **Mechanical Material Features** are **Not Altered** by this process.

The LARGEST O-Ring that can be produced with this process:

C/S: 1.574 in. (40 mm)

I.D.: Unlimited

Maximum Order: Unlimited

No Glues or **Hot Vulcanization** used in this process.

Available Materials: EPDM, EPDM PX, FEPM, FKM, FFKM, CR, HNBR, NBR, VMQ

Shown: 15 ft. (4,572 mm) I.D. Green FKM O-Ring.

INCH CROSS SECTIONS (AS568)

0.103	0.139	0.210	0.250	0.275	0.375	0.500

METRIC CROSS SECTIONS (ISO3601-1)

2.62	4.5	5.70	7.00	8.50	10.82	13.00	16.00	20.00	26.00
3.00	5.0	6.00	7.50	9.00	11.00	14.00	17.00	22.00	28.00
3.53	5.33	6.35	8.00	9.50	12.00	14.40	18.00	24.00	30.00
4.00	5.50	6.50	8.40	10.00	12.70	15.00	19.00	25.00	40.00

Dimensional Tolerances according to ISO 3601-1 and surface imperfections to ISO 3601-3, with integrations for non-standard dimensions.

CONTACT YOUR MFP SEALS SALES REPRESENTATIVE FOR MORE INFORMATION

Compound information available on pages 20-37.

Surface Finish: ISO 4287 & Chamfer Information on pages 7-9.
For ISO tolerance charts, refer to pages 12-13.

MFPSEALS®
www.mfpseals.com

Metric Extruded O-Ring Cord Stock

A product of MFP Seals.

METRIC EXTRUDED O-RING CORD STOCK

Extruded O-Ring cord is used whenever a standard size O-Ring will not fit a particular groove, or when a split O-Ring is required for the application. O-Ring cord can be trimmed to any length, providing a custom fit. Sold by the foot or spool.

Also available in inch sizes (See ORC).

The standard compound for this seal is N6001. It is also available in N6003, V7525 and V7550.

For compound descriptions and temperature ranges, please refer to pages 20 - 37.

MFP PART NUMBER

MORC-1.0N6001

SEAL TYPE — CROSS SECTION — COMPOUND

MFP PART NUMBER	EXTRUDED O-RING CORD STOCK C/S	TOL +/-
MORC-1.0	1.0 MM	.13 MM
MORC-1.6	1.6 MM	.13 MM
MORC-2.0	2.0 MM	.13 MM
MORC-2.4	2.4 MM	.13 MM
MORC-2.5	2.5 MM	.13 MM
MORC-3.0	3.0 MM	.13 MM
MORC-3.5	3.5 MM	.18 MM
MORC-4.0	4.0 MM	.18 MM
MORC-4.5	4.5 MM	.18 MM
MORC-5.0	5.0 MM	.18 MM
MORC-5.7	5.7 MM	.18 MM
MORC-6.0	6.0 MM	.18 MM
MORC-6.5	6.5 MM	.18 MM
MORC-7.0	7.0 MM	.18 MM
MORC-7.5	7.5 MM	.18 MM
MORC-8.0	8.0 MM	.25 MM
MORC-8.4	8.4 MM	.25 MM
MORC-9.0	9.0 MM	.25 MM
MORC-10.0	10.0 MM	.25 MM
MORC-11.0	11.0 MM	.25 MM
MORC-12.0	12.0 MM	.25 MM
MORC-13.0	13.0 MM	.25 MM
MORC-14.0	14.0 MM	.40 MM
MORC-15.0	15.0 MM	.40 MM
MORC-16.0	16.0 MM	.40 MM
MORC-18.0	18.0 MM	.50 MM
MORC-20.0	20.0 MM	.50 MM
MORC-24.0	24.0 MM	.50 MM
MORC-25.0	25.0 MM	.90 MM

Surface Finish: ISO 4287 & Chamfer Information on pages 7-9.
For ISO tolerance charts, refer to pages 12-13.

Compound information available on pages 20-37.

Metric Back-Up Ring - J.I.S. Size Chart

A product of MFP Seals.

MFPSEALS®
www.mfpseals.com

JIS O-Ring	C/S	ID	OD	THK
P - 3		3	6	1.25
P - 4		4	7	1.25
P - 5		5	8	1.25
P - 6		6	9	1.25
P - 7	1.5	7	10	1.25
P - 8		8	11	1.25
P - 9		9	12	1.25
P - 10		10	13	1.25
P - 10A		10	14	1.25
P - 11		11	15	1.25
P - 11.2		11.2	15.2	1.25
P - 12		12	16	1.25
P - 12.5		12.5	16.5	1.25
P - 14		14	18	1.25
P - 15		15	19	1.25
P - 16	2	16	20	1.25
P - 17		17	21	1.25
P - 18		18	22	1.25
P - 19		19	23	1.25
P - 20		20	24	1.25
P - 21		21	25	1.25
P - 22		22	26	1.25
G - 25		25	30	1.25
G - 30		30	35	1.25
G - 35		35	40	1.25
G - 40		40	45	1.25
G - 42		42	47	1.25
G - 45		45	50	1.25
G - 50		50	55	1.25
G - 55		55	60	1.25
G - 58		58	63	1.25
G - 60		60	65	1.25
G - 65		65	70	1.25
G - 70		70	75	1.25
G - 75		75	80	1.25
G - 80		80	85	1.25
G - 85	2.5	85	90	1.25
G - 90		90	95	1.25
G - 95		95	100	1.25
G - 100		100	105	1.25
G - 105		105	110	1.25
G - 110		110	115	1.25
G - 115		115	120	1.25
G - 120		120	125	1.25
G - 125		125	130	1.25
G - 130		130	135	1.25
G - 135		135	140	1.25
G - 140		140	145	1.25
G - 145		145	150	1.25

JIS O-Ring	C/S	ID	OD	THK
P - 22A		22	28	1.25
P - 22.4		22.4	28.4	1.25
P - 24		24	30	1.25
P - 25		25	31	1.25
P - 25.5		25.5	31.5	1.25
P - 26		26	32	1.25
P - 28		28	34	1.25
P - 29		29	35	1.25
P - 29.5		29.5	35.5	1.25
P - 30		30	36	1.25
P - 31		31	37	1.25
P - 31.5		31.5	37.5	1.25
P - 32		32	38	1.25
P - 34	3	34	40	1.25
P - 35		35	41	1.25
P - 35.5		35.5	41.5	1.25
P - 36		36	42	1.25
P - 38		38	44	1.25
P - 39		39	45	1.25
P - 40		40	46	1.25
P - 41		41	47	1.25
P - 42		42	48	1.25
P - 44		44	50	1.25
P - 45		45	51	1.25
P - 46		46	52	1.25
P - 48		48	54	1.25
P - 49		49	55	1.25
P - 50		50	56	1.25
P - 48A		48	58	1.9
P - 50A		50	60	1.9
P - 52		52	62	1.9
P - 53		53	63	1.9
P - 55		55	65	1.9
P - 56		56	66	1.9
P - 58		58	68	1.9
P - 60		60	70	1.9
P - 62		62	72	1.9
P - 63		63	73	1.9
P - 65		65	75	1.9
P - 67	5	67	77	1.9
P - 70		70	80	1.9
P - 71		71	81	1.9
P - 75		75	85	1.9
P - 80		80	90	1.9
P - 85		85	95	1.9
P - 90		90	100	1.9
P - 95		95	105	1.9
P - 100		100	110	1.9
P - 102		102	112	1.9

JIS O-Ring	C/S	ID	OD	THK
P - 105		105	115	1.9
P - 110		110	120	1.9
P - 112		112	122	1.9
P - 115		115	125	1.9
P - 120		120	130	1.9
P - 125		125	135	1.9
P - 130		130	140	1.9
P - 132		132	142	1.9
P - 135		135	145	1.9
P - 140		140	150	1.9
P - 145		145	155	1.9
P - 150		150	160	1.9
G - 150		150	160	1.9
G - 155		155	165	1.9
G - 160	5	160	170	1.9
G - 165		165	175	1.9
G - 170		170	180	1.9
G - 175		175	185	1.9
G - 180		180	190	1.9
G - 185		185	195	1.9
G - 190		190	200	1.9
G - 195		195	205	1.9
G - 200		200	210	1.9
G - 210		210	220	1.9
G - 220		220	230	1.9
G - 230		230	240	1.9
G - 240		240	250	1.9
G - 250		250	260	1.9
P - 150A		150	165	2.75
P - 155		155	170	2.75
P - 160		160	175	2.75
P - 165		165	180	2.75
P - 170		170	185	2.75
P - 175		175	190	2.75
P - 180		180	195	2.75
P - 185		185	200	2.75
P - 190		190	205	2.75
P - 195		195	210	2.75
P - 200		200	215	2.75
P - 205	7.5	205	220	2.75
P - 209		209	224	2.75
P - 210		210	225	2.75
P - 215		215	230	2.75
P - 220		220	235	2.75
P - 225		225	240	2.75
P - 230		230	245	2.75
P - 235		235	250	2.75
P - 240		240	255	2.75

Compound information available on pages 20-37.

Surface Finish: ISO 4287 & Chamfer Information on pages 7-9.
For ISO tolerance charts, refer to pages 12-13.

METRIC BACK-UP RINGS

MFP Seals Back-Up Rings are installed on the downstream side of an O-Ring to help prevent premature failure and leakage. If the sealing ring can not resist increasingly higher pressure, part of the seal will be forced into the diametrical gap. Back-Up Rings are used to block the clearance gap and provide support for the seal in either Rod or Piston applications.

The standard compound for this Back-Up Ring is T1000. Other compounds are available.

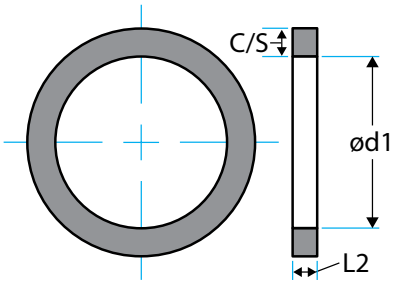

MFP PART NUMBER

MBU-2.0x010.0T1000

SEAL TYPE — C/S — ID — COMPOUND

Compound Name	Designation	Hardness	Color	Temperature Range
T1000	PTFE	55 Shore D	White	-200°C to +260°C (-328°F to +500°F)

	ROD OR PISTON APPLICATION		
MFP PART NUMBER	C/S	ød1	L2
MBU-1.5X003.0PTFE	1.5	3	1.25
MBU-1.5X004.0PTFE	1.5	4	1.25
MBU-1.5X005.0PTFE	1.5	5	1.25
MBU-1.5X006.0PTFE	1.5	6	1.25
MBU-1.5X007.0PTFE	1.5	7	1.25
MBU-1.5X008.0PTFE	1.5	8	1.25
MBU-1.5X009.0PTFE	1.5	9	1.25
MBU-1.5X010.0PTFE	1.5	10	1.25
MBU-2.0X010.0PTFE	2.0	10	1.25
MBU-2.0X011.0PTFE	2.0	11	1.25
MBU-2.0X011.2PTFE	2.0	11.2	1.25
MBU-2.0X012.0PTFE	2.0	12	1.25
MBU-2.0X012.5PTFE	2.0	12.5	1.25
MBU-2.0X013.0PTFE	2.0	13	1.25
MBU-2.0X014.0PTFE	2.0	14	1.25
MBU-2.0X015.0PTFE	2.0	15	1.25
MBU-2.0X016.0PTFE	2.0	16	1.25
MBU-2.0X017.0PTFE	2.0	17	1.25
MBU-2.0X018.0PTFE	2.0	18	1.25
MBU-2.0X019.0PTFE	2.0	19	1.25

Surface Finish: ISO 4287 & Chamfer Information on pages 7-9.
For ISO tolerance charts, refer to pages 12-13.

Compound information available on pages 20-37.

Metric Back-Up Rings

A product of MFP Seals.

MFPSEALS®
www.mfpseals.com

MBU

METRIC BACK-UP RINGS

MFP PART NUMBER	ROD OR PISTON APPLICATION		
	C/S	ød1	L2
MBU-2.0X020.0PTFE	2.0	20	1.25
MBU-2.0X021.0PTFE	2.0	21	1.25
MBU-2.0X022.0PTFE	2.0	22	1.25
MBU-2.5X025.0PTFE	2.5	25	1.25
MBU-2.5X030.0PTFE	2.5	30	1.25
MBU-2.5X035.0PTFE	2.5	35	1.25
MBU-2.5X040.0PTFE	2.5	40	1.25
MBU-2.5X045.0PTFE	2.5	45	1.25
MBU-2.5X050.0PTFE	2.5	50	1.25
MBU-2.5X052.0PTFE	2.5	52	1.25
MBU-2.5X055.0PTFE	2.5	55	1.25
MBU-2.5X057.0PTFE	2.5	57	1.25
MBU-2.5X058.0PTFE	2.5	58	1.25
MBU-2.5X060.0PTFE	2.5	60	1.25
MBU-2.5X062.0PTFE	2.5	62	1.25
MBU-2.5X065.0PTFE	2.5	65	1.25
MBU-2.5X070.0PTFE	2.5	70	1.25
MBU-2.5X075.0PTFE	2.5	75	1.25
MBU-2.5X080.0PTFE	2.5	80	1.25
MBU-2.5X085.0PTFE	2.5	85	1.25
MBU-2.5X090.0PTFE	2.5	90	1.25
MBU-2.5X095.0PTFE	2.5	95	1.25
MBU-2.5X100.0PTFE	2.5	100	1.25
MBU-2.5X105.0PTFE	2.5	105	1.25
MBU-2.5X106.0PTFE	2.5	106	1.25
MBU-2.5X108.0PTFE	2.5	108	1.25
MBU-2.5X110.0PTFE	2.5	110	1.25
MBU-2.5X115.0PTFE	2.5	115	1.25
MBU-2.5X116.0PTFE	2.5	116	1.25
MBU-2.5X120.0PTFE	2.5	120	1.25
MBU-2.5X125.0PTFE	2.5	125	1.25
MBU-2.5X126.0PTFE	2.5	126	1.25
MBU-2.5X128.0PTFE	2.5	128	1.25
MBU-2.5X130.0PTFE	2.5	130	1.25
MBU-2.5X135.0PTFE	2.5	135	1.25
MBU-2.5X136.0PTFE	2.5	136	1.25
MBU-2.5X140.0PTFE	2.5	140	1.25
MBU-2.5X145.0PTFE	2.5	145	1.25
MBU-2.5X146.0PTFE	2.5	146	1.25
MBU-3.0X022.0PTFE	3.0	22	1.25
MBU-3.0X022.4PTFE	3.0	22.4	1.25
MBU-3.0X024.0PTFE	3.0	24	1.25
MBU-3.0X025.0PTFE	3.0	25	1.25
MBU-3.0X025.5PTFE	3.0	25.5	1.25
MBU-3.0X026.0PTFE	3.0	26	1.25
MBU-3.0X028.0PTFE	3.0	28	1.25
MBU-3.0X029.0PTFE	3.0	29	1.25

Compound information available on pages 20-37.

Surface Finish: ISO 4287 & Chamfer Information on pages 7-9.
For ISO tolerance charts, refer to pages 12-13.

MFP PART NUMBER	ROD OR PISTON APPLICATION		
	C/S	ød1	L2
MBU-3.0X029.5PTFE	3.0	29.5	1.25
MBU-3.0X030.0PTFE	3.0	30	1.25
MBU-3.0X031.0PTFE	3.0	31	1.25
MBU-3.0X031.5PTFE	3.0	31.5	1.25
MBU-3.0X032.0PTFE	3.0	32	1.25
MBU-3.0X034.0PTFE	3.0	34	1.25
MBU-3.0X035.0PTFE	3.0	35	1.25
MBU-3.0X035.5PTFE	3.0	35.5	1.25
MBU-3.0X036.0PTFE	3.0	36	1.25
MBU-3.0X038.0PTFE	3.0	38	1.25
MBU-3.0X039.0PTFE	3.0	39	1.25
MBU-3.0X040.0PTFE	3.0	40	1.25
MBU-3.0X041.0PTFE	3.0	41	1.25
MBU-3.0X042.0PTFE	3.0	42	1.25
MBU-3.0X043.0PTFE	3.0	43	1.25
MBU-3.0X044.0PTFE	3.0	44	1.25
MBU-3.0X045.0PTFE	3.0	45	1.25
MBU-3.0X046.0PTFE	3.0	46	1.25
MBU-3.0X048.0PTFE	3.0	48	1.25
MBU-3.0X049.0PTFE	3.0	49	1.25
MBU-3.0X050.0PTFE	3.0	50	1.25
MBU-5.0X048.0PTFE	5.0	48	1.9
MBU-5.0X050.0PTFE	5.0	50	1.9
MBU-5.0X052.0PTFE	5.0	52	1.9
MBU-5.0X053.0PTFE	5.0	53	1.9
MBU-5.0X055.0PTFE	5.0	55	1.9
MBU-5.0X056.0PTFE	5.0	56	1.9
MBU-5.0X058.0PTFE	5.0	58	1.9
MBU-5.0X060.0PTFE	5.0	60	1.9
MBU-5.0X062.0PTFE	5.0	62	1.9
MBU-5.0X063.0PTFE	5.0	63	1.9
MBU-5.0X065.0PTFE	5.0	65	1.9
MBU-5.0X067.0PTFE	5.0	67	1.9
MBU-5.0X070.0PTFE	5.0	70	1.9
MBU-5.0X071.0PTFE	5.0	71	1.9
MBU-5.0X075.0PTFE	5.0	75	1.9
MBU-5.0X080.0PTFE	5.0	80	1.9
MBU-5.0X085.0PTFE	5.0	85	1.9
MBU-5.0X090.0PTFE	5.0	90	1.9
MBU-5.0X095.0PTFE	5.0	95	1.9
MBU-5.0X100.0PTFE	5.0	100	1.9
MBU-5.0X102.0PTFE	5.0	102	1.9
MBU-5.0X105.0PTFE	5.0	105	1.9
MBU-5.0X110.0PTFE	5.0	110	1.9
MBU-5.0X112.0PTFE	5.0	112	1.9
MBU-5.0X115.0PTFE	5.0	115	1.9
MBU-5.0X120.0PTFE	5.0	120	1.9

Metric Back-Up Rings

A product of MFP Seals.

MFPSEALS®
www.mfpseals.com

MBU

METRIC BACK-UP RINGS

MFP PART NUMBER	ROD OR PISTON APPLICATION		
	C/S	ød1	L2
MBU-5.0X125.0PTFE	5.0	125	1.9
MBU-5.0X130.0PTFE	5.0	130	1.9
MBU-5.0X132.0PTFE	5.0	132	1.9
MBU-5.0X135.0PTFE	5.0	135	1.9
MBU-5.0X140.0PTFE	5.0	140	1.9
MBU-5.0X145.0PTFE	5.0	145	1.9
MBU-5.0X150.0PTFE	5.0	150	1.9
MBU-5.0X152.0PTFE	5.0	152	1.9
MBU-5.0X155.0PTFE	5.0	155	1.9
MBU-5.0X160.0PTFE	5.0	160	1.9
MBU-5.0X165.0PTFE	5.0	165	1.9
MBU-5.0X170.0PTFE	5.0	170	1.9
MBU-5.0X175.0PTFE	5.0	175	1.9
MBU-5.0X180.0PTFE	5.0	180	1.9
MBU-5.0X185.0PTFE	5.0	185	1.9
MBU-5.0X190.0PTFE	5.0	190	1.9
MBU-5.0X192.0PTFE	5.0	192	1.9
MBU-5.0X195.0PTFE	5.0	195	1.9
MBU-5.0X200.0PTFE	5.0	200	1.9
MBU-5.0X205.0PTFE	5.0	205	1.9
MBU-5.0X210.0PTFE	5.0	210	1.9
MBU-5.0X215.0PTFE	5.0	215	1.9
MBU-5.0X220.0PTFE	5.0	220	1.9
MBU-5.0X225.0PTFE	5.0	225	1.9
MBU-5.0X230.0PTFE	5.0	230	1.9
MBU-5.0X235.0PTFE	5.0	235	1.9
MBU-5.0X240.0PTFE	5.0	240	1.9
MBU-5.0X245.0PTFE	5.0	245	1.9
MBU-5.0X250.0PTFE	5.0	250	1.9
MBU-5.0X255.0PTFE	5.0	255	1.9
MBU-5.0X260.0PTFE	5.0	260	1.9
MBU-5.0X265.0PTFE	5.0	265	1.9
MBU-5.0X270.0PTFE	5.0	270	1.9
MBU-5.0X275.0PTFE	5.0	275	1.9
MBU-5.0X280.0PTFE	5.0	280	1.9
MBU-5.0X285.0PTFE	5.0	285	1.9
MBU-5.0X290.0PTFE	5.0	290	1.9
MBU-5.0X295.0PTFE	5.0	295	1.9
MBU-5.0X300.0PTFE	5.0	300	1.9
MBU-7.5X150.0PTFE	7.5	150	2.75
MBU-7.5X155.0PTFE	7.5	155	2.75
MBU-7.5X160.0PTFE	7.5	160	2.75
MBU-7.5X165.0PTFE	7.5	165	2.75
MBU-7.5X170.0PTFE	7.5	170	2.75
MBU-7.5X175.0PTFE	7.5	175	2.75
MBU-7.5X180.0PTFE	7.5	180	2.75
MBU-7.5X185.0PTFE	7.5	185	2.75

Compound information available on pages 20-37.

Surface Finish: ISO 4287 & Chamfer Information on pages 7-9.
For ISO tolerance charts, refer to pages 12-13.

MFPSEALS®
www.mfpseals.com

Metric Back-Up Rings

A product of MFP Seals.

MFP PART NUMBER	ROD OR PISTON APPLICATION		
	C/S	ød1	L2
MBU-7.5X190.0PTFE	7.5	190	2.75
MBU-7.5X195.0PTFE	7.5	195	2.75
MBU-7.5X200.0PTFE	7.5	200	2.75
MBU-7.5X205.0PTFE	7.5	205	2.75
MBU-7.5X209.0PTFE	7.5	209	2.75
MBU-7.5X210.0PTFE	7.5	210	2.75
MBU-7.5X215.0PTFE	7.5	215	2.75
MBU-7.5X220.0PTFE	7.5	220	2.75
MBU-7.5X225.0PTFE	7.5	225	2.75
MBU-7.5X230.0PTFE	7.5	230	2.75
MBU-7.5X235.0PTFE	7.5	235	2.75
MBU-7.5X240.0PTFE	7.5	240	2.75
MBU-7.5X245.0PTFE	7.5	245	2.75
MBU-7.5X250.0PTFE	7.5	250	2.75
MBU-7.5X255.0PTFE	7.5	255	2.75
MBU-7.5X260.0PTFE	7.5	260	2.75
MBU-7.5X265.0PTFE	7.5	265	2.75
MBU-7.5X270.0PTFE	7.5	270	2.75
MBU-7.5X275.0PTFE	7.5	275	2.75
MBU-7.5X280.0PTFE	7.5	280	2.75
MBU-7.5X285.0PTFE	7.5	285	2.75
MBU-7.5X290.0PTFE	7.5	290	2.75
MBU-7.5X295.0PTFE	7.5	295	2.75
MBU-7.5X300.0PTFE	7.5	300	2.75

Surface Finish: ISO 4287 & Chamfer Information on pages 7-9.
For ISO tolerance charts, refer to pages 12-13.

Compound information available on pages 20-37.

Metric Back-Up Rings

A product of MFP Seals.

MFPSEALS
www.mfpseals.com

MBTU

METRIC BACK-UP RINGS

METRIC BACK-UP RINGS

MFP Seals Back-Up Rings are installed on the downstream side of an U-Cup to help prevent premature failure and leakage. If the sealing ring can not resist increasingly higher pressure, part of the seal will be forced into the diametrical gap. Back-Up Rings are used to block the clearance gap and provide support for the seal in either Rod or Piston applications.

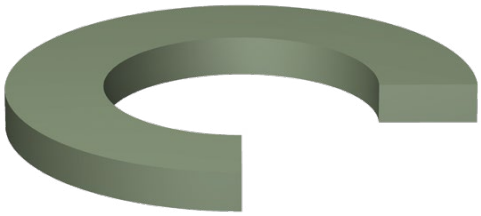

The standard compound for this Back-Up Ring is T5100. Other compounds are available.

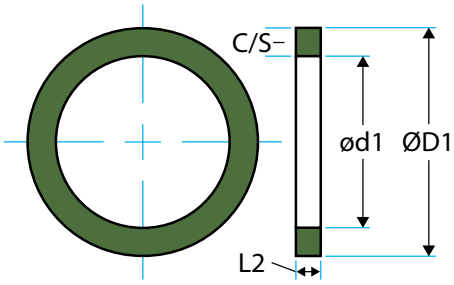

MFP PART NUMBER

MBTU-20x30T5100

SEAL TYPE — ød1 — ØD1 — COMPOUND

Compound Name	Designation	Hardness	Color	Temperature Range
T5100	PTFE	58 Shore D	Green	-200°C to +260°C (-328°F to +500°F)

	ROD OR PISTON APPLICATION		
MFP PART NUMBER	ød1	ØD1	L2
MBTU-20X30X2T5100	20.00	30.00	2.00
MBTU-20X33X2T5100	20.00	33.00	2.00
MBTU-22X30X2T5100	22.00	30.00	2.00
MBTU-22X33X2T5100	22.00	33.00	2.00
MBTU-22X35X2T5100	22.00	35.00	2.00
MBTU-22.4X30X2T5100	22.40	30.00	2.00
MBTU-22.4X33X2T5100	22.40	33.00	2.00
MBTU-23.5X31.5X2T5100	23.50	31.50	2.00
MBTU-24X32X2T5100	24.00	32.00	2.00
MBTU-25X33X2T5100	25.00	33.00	2.00
MBTU-25X33X3T5100	25.00	33.00	3.00
MBTU-25X35X3T5100	25.00	35.00	3.00
MBTU-27X40X3T5100	27.00	40.00	3.00
MBTU-28X35.5X3T5100	28.00	35.50	3.00
MBTU-28X36X3T5100	28.00	36.00	3.00
MBTU-28X40X3T5100	28.00	40.00	3.00
MBTU-28X41X3T5100	28.00	41.00	3.00
MBTU-30X40X3T5100	30.00	40.00	3.00
MBTU-31.5X41.5X3T5100	31.50	41.50	3.00
MBTU-31.5X44.5X3T5100	31.50	44.50	3.00
MBTU-32X38X3T5100	32.00	38.00	3.00
MBTU-32X42X3T5100	32.00	42.00	3.00

Compound information available on pages 20-37.

Surface Finish: ISO 4287 & Chamfer Information on pages 7-9.
For ISO tolerance charts, refer to pages 12-13.

MFPSEALS®
www.mfpseals.com

Metric Back-Up Rings

A product of MFP Seals.

MFP PART NUMBER	ROD OR PISTON APPLICATION C/S	ID	THK
MBTU-32X48X3T5100	32.00	48.00	3.00
MBTU-34X50X3T5100	34.00	50.00	3.00
MBTU-35X45X3T5100	35.00	45.00	3.00
MBTU-35X50X3T5100	35.00	50.00	3.00
MBTU-35.5X45X3T5100	35.50	45.00	3.00
MBTU-35.5X51.5X3T5100	35.50	51.50	3.00
MBTU-36X46X3T5100	36.00	46.00	3.00
MBTU-40X50X3T5100	40.00	50.00	3.00
MBTU-40X55X3T5100	40.00	55.00	3.00
MBTU-40X56X3T5100	40.00	56.00	3.00
MBTU-45X55X3T5100	45.00	55.00	3.00
MBTU-45X56X3T5100	45.00	56.00	3.00
MBTU-45X60X3T5100	45.00	60.00	3.00
MBTU-47X61X3T5100	47.00	61.00	3.00
MBTU-47X63X3T5100	47.00	63.00	3.00
MBTU-48X63X3T5100	48.00	63.00	3.00
MBTU-50X60X3T5100	50.00	60.00	3.00
MBTU-50X63X3T5100	50.00	63.00	3.00
MBTU-50X65X3T5100	50.00	65.00	3.00
MBTU-50X70X3T5100	50.00	70.00	3.00
MBTU-53X63X3T5100	53.00	63.00	3.00
MBTU-54X60X3T5100	54.00	60.00	3.00
MBTU-55X65X3T5100	55.00	65.00	3.00
MBTU-55X68X3T5100	55.00	68.00	3.00
MBTU-55X70X3T5100	55.00	70.00	3.00
MBTU-55X71X3T5100	55.00	71.00	3.00
MBTU-55X75X3T5100	55.00	75.00	3.00
MBTU-60X70X3T5100	60.00	70.00	3.00
MBTU-60X71X3T5100	60.00	71.00	3.00
MBTU-60X73X3T5100	60.00	73.00	3.00
MBTU-60X75X3T5100	60.00	75.00	3.00
MBTU-60X76X3T5100	60.00	76.00	3.00
MBTU-60X80X3T5100	60.00	80.00	3.00
MBTU-61X71X3T5100	61.00	71.00	3.00
MBTU-63X73X3T5100	63.00	73.00	3.00
MBTU-64X80X3T5100	64.00	80.00	3.00
MBTU-65X75X3T5100	65.00	75.00	3.00
MBTU-65X78X3T5100	65.00	78.00	3.00
MBTU-65X80X3T5100	65.00	80.00	3.00
MBTU-65X85X3T5100	65.00	85.00	3.00
MBTU-67X77X3T5100	67.00	77.00	3.00
MBTU-70X80X3T5100	70.00	80.00	3.00
MBTU-70X83X3T5100	70.00	83.00	3.00
MBTU-70X85X3T5100	70.00	85.00	3.00
MBTU-70X90X3T5100	70.00	90.00	3.00
MBTU-71X80X3T5100	71.00	80.00	3.00
MBTU-71X81X3T5100	71.00	81.00	3.00

Surface Finish: ISO 4287 & Chamfer Information on pages 7-9.
For ISO tolerance charts, refer to pages 12-13.

Compound information available on pages 20-37.

Metric Back-Up Rings

A product of MFP Seals.

MFPSEALS®
www.mfpseals.com

MFP PART NUMBER	ROD OR PISTON APPLICATION C/S	ID	THK
MBTU-75X85X3T5100	75.00	85.00	3.00
MBTU-75X88X3T5100	75.00	88.00	3.00
MBTU-75X90X3T5100	75.00	90.00	3.00
MBTU-75X95X3T5100	75.00	95.00	3.00
MBTU-80X90X3T5100	80.00	90.00	3.00
MBTU-80X93X3T5100	80.00	93.00	3.00
MBTU-80X95X3T5100	80.00	95.00	3.00
MBTU-80X100X3T5100	80.00	100.00	3.00
MBTU-85X100X2T5100	85.00	100.00	2.00
MBTU-85X100X3T5100	85.00	100.00	3.00
MBTU-85X105X3T5100	85.00	105.00	3.00
MBTU-90X105X3T5100	90.00	105.00	3.00
MBTU-90X110X3T5100	90.00	110.00	3.00
MBTU-95X105X3T5100	95.00	105.00	3.00
MBTU-95X110X3T5100	95.00	110.00	3.00
MBTU-95X115X3T5100	95.00	115.00	3.00
MBTU-100X115X3T5100	100.00	115.00	3.00
MBTU-100X120X3T5100	100.00	120.00	3.00
MBTU-100X125X3T5100	100.00	125.00	3.00
MBTU-105X120X3T5100	105.00	120.00	3.00
MBTU-105X125X3T5100	105.00	125.00	3.00
MBTU-106X120X3T5100	106.00	120.00	3.00
MBTU-106X123X3T5100	106.00	123.00	3.00
MBTU-110X125X3T5100	110.00	125.00	3.00
MBTU-110X130X3T5100	110.00	130.00	3.00
MBTU-112X125X3T5100	112.00	125.00	3.00
MBTU-112X132X3T5100	112.00	132.00	3.00
MBTU-115X130X3T5100	115.00	130.00	3.00
MBTU-115X135X3T5100	115.00	135.00	3.00
MBTU-120X135X3T5100	120.00	135.00	3.00
MBTU-120X140X3T5100	120.00	140.00	3.00
MBTU-125X140X3T5100	125.00	140.00	3.00
MBTU-125X150X3T5100	125.00	150.00	3.00
MBTU-130X145X3T5100	130.00	145.00	3.00
MBTU-130X150X3T5100	130.00	150.00	3.00
MBTU-135X150X3T5100	135.00	150.00	3.00
MBTU-135X160X3T5100	135.00	160.00	3.00
MBTU-136X150X3T5100	136.00	150.00	3.00
MBTU-140X155X3T5100	140.00	155.00	3.00
MBTU-140X160X3T5100	140.00	160.00	3.00
MBTU-140X165X3T5100	140.00	165.00	3.00
MBTU-145X160X3T5100	145.00	160.00	3.00
MBTU-145X165X3T5100	145.00	165.00	3.00
MBTU-145X170X3T5100	145.00	170.00	3.00
MBTU-150X165X3T5100	150.00	165.00	3.00
MBTU-155X170X4T5100	155.00	170.00	4.00
MBTU-155X180X4T5100	155.00	180.00	4.00

Compound information available on pages 20-37.

Surface Finish: ISO 4287 & Chamfer Information on pages 7-9.
For ISO tolerance charts, refer to pages 12-13.

MFPSEALS®
www.mfpseals.com

Metric Back-Up Rings

A product of MFP Seals.

MFP PART NUMBER	ROD OR PISTON APPLICATION C/S	ID	THK
MBTU-160X175X4T5100	160.00	175.00	4.00
MBTU-160X180X4T5100	160.00	180.00	4.00
MBTU-160X185X4T5100	160.00	185.00	4.00
MBTU-165X180X4T5100	165.00	180.00	4.00
MBTU-170X180X4T5100	170.00	180.00	4.00
MBTU-170X190X4T5100	170.00	190.00	4.00
MBTU-170X200X4T5100	170.00	200.00	4.00
MBTU-175X190X4T5100	175.00	190.00	4.00
MBTU-175X200X4T5100	175.00	200.00	4.00
MBTU-180X200X4T5100	180.00	200.00	4.00
MBTU-180X205X4T5100	180.00	205.00	4.00
MBTU-190X200X4T5100	190.00	200.00	4.00
MBTU-190X210X4T5100	190.00	210.00	4.00
MBTU-200X220X4T5100	200.00	220.00	4.00
MBTU-200X225X4T5100	200.00	225.00	4.00
MBTU-204X224X4T5100	204.00	224.00	4.00
MBTU-205X220X4T5100	205.00	220.00	4.00
MBTU-205X225X4T5100	205.00	225.00	4.00
MBTU-210X230X4T5100	210.00	230.00	4.00
MBTU-220X240X4T5100	220.00	240.00	4.00
MBTU-225X245X4T5100	225.00	245.00	4.00
MBTU-225X250X4T5100	225.00	250.00	4.00
MBTU-230X250X4T5100	230.00	250.00	4.00
MBTU-240X260X4T5100	240.00	260.00	4.00
MBTU-250X270X4T5100	250.00	270.00	4.00
MBTU-250X275X4T5100	250.00	275.00	4.00
MBTU-255X280X4T5100	255.00	280.00	4.00
MBTU-260X285X4T5100	260.00	285.00	4.00
MBTU-265X290X4T5100	265.00	290.00	4.00
MBTU-265X297X4T5100	265.00	297.00	4.00
MBTU-270X295X4T5100	270.00	295.00	4.00
MBTU-270X300X4T5100	270.00	300.00	4.00
MBTU-275X300X4T5100	275.00	300.00	4.00
MBTU-280X305X4T5100	280.00	305.00	4.00
MBTU-280X312X4T5100	280.00	312.00	4.00
MBTU-290X315X4T5100	290.00	315.00	4.00
MBTU-300X325X4T5100	300.00	325.00	4.00
MBTU-300X332X4T5100	300.00	332.00	4.00

Surface Finish: ISO 4287 & Chamfer Information on pages 7-9.
For ISO tolerance charts, refer to pages 12-13.

Compound information available on pages 20-37.

MPUC - Metric Asymmetrical Piston U-Cup

A product of MFP Seals.

MFP SEALS
www.mfpseals.com

MPUC - METRIC ASYMMETRICAL PISTON U-CUP

MFP Seals' MPUC Asymmetrical Piston U-Cup is designed for linear piston applications. The MPUC features a knife trimmed sealing lip for increased sealing ability. The design was enhanced using finite element analysis giving you the best product on the market. Produced from our U2151 compound the seal offers extremely low compression set and excellent extrusion resistance.

The standard compound for this seal is U2151. It is also available in compounds U2145, U2150, U2162, U4150 and H2155.

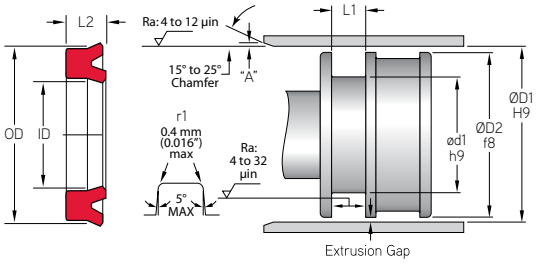

MFP PART NUMBER

MPUC-050X040X06.0U2151

SEAL TYPE | ØD1 | ød1 | L2 | COMPOUND

Pressure: 400 bar (5,800 psi) **Max. Velocity:** 0.5 m/s (< 1.6 ft./s)

MFP PART NUMBER	PISTON APPLICATION ØD1	ØD2	ød1	L2	L1
TOLERANCE	H9	f8	h9		+0.2
MPUC-050X040X06.0U2151	50	50	40	6	7
MPUC-050X040X07.3U2151	50	50	40	7.3	8
MPUC-063X053X06.0U2151	63	63	53	6	7
MPUC-065X055X06.0U2151	65	65	55	6	7
MPUC-070X060X06.0U2151	70	70	60	6	7
MPUC-080X070X06.0U2151	80	80	70	6	7
MPUC-090X075X11.4U2151	90	90	75	11.4	12.5
MPUC-100X085X11.4U2151	100	100	85	11.4	12.5
MPUC-120X105X09.0U2151	120	120	105	9	10
MPUC-120X105X14.5U2151	120	120	105	14.5	16
MPUC-140X125X09.0U2151	140	140	125	9	10
MPUC-160X140X14.5U2151	160	160	140	14.5	16
MPUC-225X200X18.2U2151	225	225	200	18.2	20

Compound information available on pages 20-37.

Surface Finish: ISO 4287 & Chamfer Information on pages 7-9.
For ISO tolerance charts, refer to pages 12-13.

MFPSEALS®
www.mfpseals.com

MPAE - Anti-Extrusion Piston Ring

A product of MFP Seals.

MPAE - ANTI-EXTRUSION PISTON RING

The MPAE Anti-Extrusion Piston Ring is used on either side of some piston seals to reduce premature seal life. Common on metric equipment.

The standard compound for MPAE is Nylon®

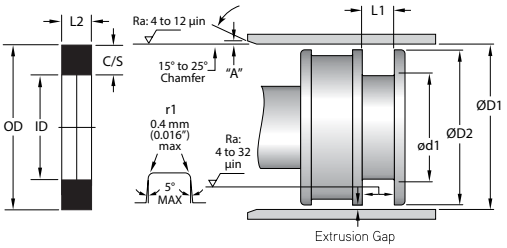

MFP PART NUMBER

MPAE-095x2.5x2.5

SEAL TYPE — BORE — C/S — HEIGHT

Pressure: 350 bar (5,000 psi) **Max. Velocity:** < 1.5 m/s (< 5 ft./s)

MFP PART NUMBER	PISTON APPLICATION ØD1	C/S	L2
TOLERANCE	H9		
MPAE-095X2.5X2.5	95.0	2.5	2.5
MPAE-100X2.5X2.5	100.0	2.5	2.5
MPAE-105X2.5X2.5	105.0	2.5	2.5
MPAE-110X2.5X2.5	110.0	2.5	2.5
MPAE-110X3.0X3.0	110.0	3.0	3.0
MPAE-115X2.5X2.5	115.0	2.5	2.5
MPAE-115X3.0X3.0	115.0	3.0	3.0
MPAE-120X3.0X3.0	120.0	3.0	3.0
MPAE-125X3.0X3.0	125.0	3.0	3.0
MPAE-130X3.0X3.0	130.0	3.0	3.0
MPAE-135X3.0X3.0	135.0	3.0	3.0
MPAE-140X3.0X3.0	140.0	3.0	3.0
MPAE-145X3.0X3.0	145.0	3.0	3.0
MPAE-150X3.0X3.0	150.0	3.0	3.0
MPAE-160X3.0X3.0	160.0	3.0	3.0
MPAE-165X3.0X3.0	165.0	3.0	3.0
MPAE-170X3.0X3.0	170.0	3.0	3.0
MPAE-180X3.0X3.0	180.0	3.0	3.0
MPAE-190X3.0X3.0	190.0	3.0	3.0

Surface Finish: ISO 4287 & Chamfer Information on pages 7-9.
For ISO tolerance charts, refer to pages 12-13.

Compound information available on pages 20-37.

MFPSEALS®
www.mfpseals.com

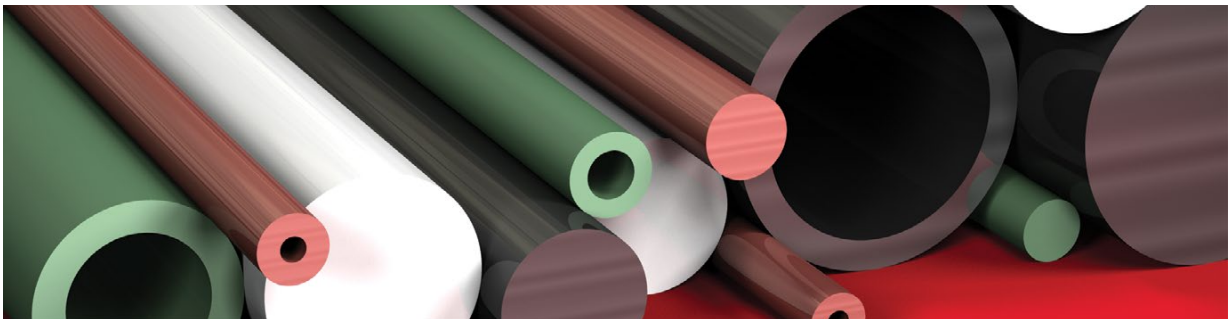

PTFE RODS & TUBES

MFP Seals produces PTFE Rods and Tubes in an extensive range of sizes, colors, and PTFE materials (Polytetrafluoroethylene), including our T1000 (virgin PTFE). A T1000 Rod or Tube is a low friction product that is inert to most liquids and corrosives, and is also non-contaminating, making it the ideal material for use in applications where metals and alloys would corrode quickly. Capable of withstanding temperatures from -328°F up to +500°F, T1000 can handle an extremely wide range of environments and is often used in high temperature applications.

While T1000 Rods and Tubes are white in color, they can also be made from blended materials to meet the customers' application needs. Adding a filler will generally color the Rod or Tube to match the filler, but other custom colors can also be achieved. You must request custom colors prior to fabrication. Certain fillers or colors may affect the physical properties of the material. Please inform us if testing of a certain blend is required.

To ensure fast and efficient service, MFP Seals stocks a wide range of molded and extruded tubes and rods, in virgin PTFE as well as blended compounds. Give MFP Seals a call today, and we can work with you to suggest the best solution for your particular Rod or Tube application.

For more information, or to order, contact MFP Seals.

T1000 (Virgin PTFE)			
Properties	**Unit**	**Method**	**Typical Value**
PHYSICAL - MECHANICAL			
Density	g/cm^3	ASTM D792	2.14 - 2.18
Hardness - Shore D	points	ASTM D2240	51 - 60
Tensile strength - CD	MPa	ISO 527	≥ 20
Elongation at break - CD	%	ISO 527	>200
Compressive strength at 1% deformation - CD	psi	ASTM D695	580 - 725
Deformation under load at room temperature after 24 hours at 13.7 N/mm^2 - CD	%	ASTM D621	14 - 17
Permanent deformation as above after 24 hours of rest at room temperature - CD	%	ASTM D621	7 - 8
Deformation under load at 260°C, after 24 hours at 41 N/mm^2 - CD	%	ASTM D621	
Permanent deformation as above after 24 hours of rest at room temperature - CD	%	ASTM D621	7 - 8
Impact strength Izod	J/m	ASTM D256	153
TRIBIOLOGICAL			
Dynamic coefficient of friction	/	ASTM D1894 ASTM D3702	0.06
Wear factor K	/	ASTM D3702	2.900
PV limit at 3 m/min at 30 m/min at 300 m/min	$N/mm^2 \cdot m/min$	/	2.4 4.2 5.7
THERMAL			
Service Temperature (min - max)	°F	/	-328 / +500
Thermal expansion coefficient (linear) 25 - 100°C	10^{-5}in/in/°F	ASTM D696	6.625 - 7.206
ELECTRICAL			
Dielectric strength (specimen 0.5 mm thick)	KV/mm	ASTM D149	≥ 40
Dielectric Constant at 60 Hz and 106 Hz	/	ASTM D150	2.05 - 2.10
Volume Resistivity	Ω • cm	ASTM D257	10^{18}
Surface Resistivity	Ω	ASTM D257	10^{17}

CD = Cross Direction

The data we are herewith providing are all based on laboratory testing and are proposed to technical designers as possible and useful advice. Deviations from the values indicated may occur, but they do not constitute themselves either detriment of quality or reason for rejection.

PROMOTIONAL MEDIA

MFPSEALS®
www.mfpseals.com

MRU - Metric Asymmetrical Rod Seal U-Cup

A product of MFP Seals.

MRU METRIC ASYMMETRICAL ROD SEAL U-CUP

MFP Seals' MRU Metric Rod Seal U-Cup is an asymmetrical design cup seal for use in hydraulic applications. The knife-trimmed primary lip provides superior sealing ability. The design was enhanced using finite element analysis giving you the best product on the market.

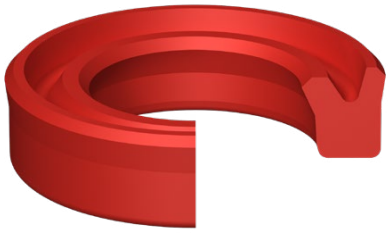

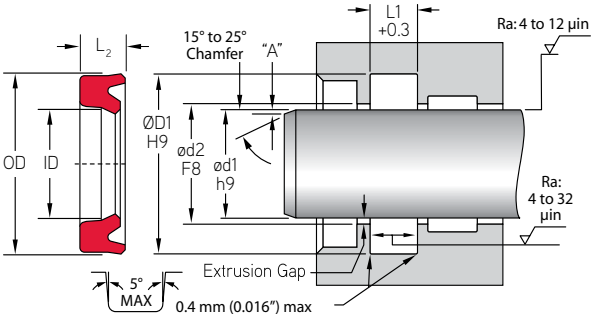

The standard compound for this seal is U2151. It is also available in compounds U2150, U2162, U4150, and H2155.

MFP PART NUMBER

MRU-018x026x05U2151

SEAL TYPE | ød1 | ød2 | ØD1 | COMPOUND

Larger sizes, not listed, are available but may require tooling.

Pressure: 400 bar (5,800 psi) **Max. Velocity:** 0.5 m/s (< 1.6 ft./s)

	ROD OR PISTON APPLICATION					
MFP PART NUMBER	**ød1**	**ød2**	**ØD1**	**L2**	**L1**	**L1 with B/U**
TOLERANCE	h9	F8	H9		+0.3/-.000	+0.3/-.000
MRU-018x026x05	18	18	26	5	5.7	7.7
MRU-020X028X05	20	20	28	5	5.7	7.7
MRU-022X030X05	22	22	30	5	5.7	7.7
MRU-022.4X030X05	22.4	22.4	30	5	5.7	7.7
MRU-022.4X030.4X05	22.4	22.4	30.4	5	5.7	7.7
MRU-023.5X031.5X05	23.5	23.5	31.5	5	5.7	7.7
MRU-024X032X05	24	24	32	5	5.7	7.7
MRU-025X031X05	25	25	31	5	5.7	7.7
MRU-025X033X05	25	25	33	5	5.7	7.7
MRU-025X035X05	25	25	35	5	5.7	7.7
MRU-028X035.5X05	28	28	35.5	5	5.7	7.7
MRU-028X036X05	28	28	36	5	5.7	7.7
MRU-030X040X06	30	30	40	6	7	10
MRU-031.5X041.5X06	31.5	31.5	41.5	6	7	10
MRU-035X045X06	35	35	45	6	7	10
MRU-035.5X045X06	35.5	35.5	45	6	7	10
MRU-035.5X045.5X06	35.5	35.5	45.5	6	7	10
MRU-040X048X06.3	40	40	48	6.3	7.3	10.3
MRU-040X050X06	40	40	50	6	7	10
MRU-042X052X07.3	42	42	52	7.3	8.3	11.3
MRU-045X055X06	45	45	55	6	7	10
MRU-045X055X07.3	45	45	55	7.3	8.3	11.3
MRU-045X056X07	45	45	56	7	8	11
MRU-050X060X06	50	50	60	6	7	10
MRU-053X063X06	53	53	63	6	7	10
MRU-055X065X06	55	55	65	6	7	10
MRU-055X068X10	55	55	68	10	11	14
MRU-056X066X06	56	56	66	6	7	10

Surface Finish: ISO 4287 & Chamfer Information on pages 7-9.
For ISO tolerance charts, refer to pages 12-13.

Compound information available on pages 20-37.

MRU - Metric Asymmetrical Rod Seal U-Cup

A product of MFP Seals.

MFPSEALS®
www.mfpseals.com

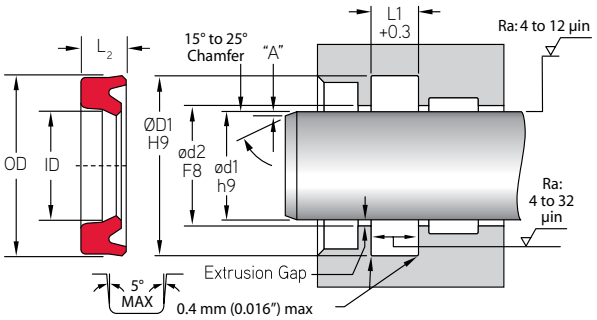

	ROD OR PISTON APPLICATION					
MFP PART NUMBER	ød1	ød2	ØD1	L2	L1	L1 with B/U
TOLERANCE	h9	F8	H9	f8	+0.3/-.000	+0.3/-.000
MRU-056X066X07.3	56	56	66	7.3	8.3	11.3
MRU-060X070X06	60	60	70	6	7	10
MRU-060X071X07	60	60	71	7	8	11
MRU-063X073X06	63	63	73	6	7	10
MRU-063X079X11.5	63	63	79	11.5	12.5	15.5
MRU-065X075X06	65	65	75	6	7	10
MRU-067X077X06	67	67	77	6	7	10
MRU-070X080X06	70	70	80	6	7	10
MRU-071X081X06	71	71	81	6	7	10
MRU-075X085X06	75	75	85	6	7	10
MRU-080X090X06	80	80	90	6	7	10
MRU-085X100X09	85	85	100	9	10	13
MRU-090X105X09	90	90	105	9	10	13
MRU-095X110X09	95	95	110	9	10	13
MRU-098X112X08.5	98	98	112	8.5	9.5	12.5
MRU-100X115X09	100	100	115	9	10	13
MRU-105X120X09	105	105	120	9	10	13
MRU-106X120X08.5	106	106	120	8.5	9.5	12.5
MRU-106X121X09	106	106	121	9	10	13
MRU-110X125X09	110	110	125	9	10	13
MRU-112X125X09	112	112	125	9	10	13
MRU-115X130X09	115	115	130	9	10	13
MRU-118X133X09	118	118	133	9	10	13
MRU-120X135X09	120	120	135	9	10	13
MRU-125X140X09	125	125	140	9	10	13
MRU-130X145X09	130	130	145	9	10	13
MRU-136X150X08.5	136	136	150	8.5	9.5	12.5
MRU-140X155X09	140	140	155	9	10	13
MRU-145X160X09	145	145	160	9	10	13
MRU-150X165X09	150	150	165	9	10	13
MRU-155X170X09	155	155	170	9	10	14
MRU-160X175X09	160	160	175	9	10	14
MRU-165X180X09	165	165	180	9	10	14
MRU-170X185X09	170	170	185	9	10	14
MRU-175X190X09	175	175	190	9	10	14
MRU-180X200x12	180	180	200	12	13	17
MRU-190X210x12	190	190	210	12	13	17
MRU-200X220x12	200	200	220	12	13	17

Compound information available on pages 20-37.

Surface Finish: ISO 4287 & Chamfer Information on pages 7-9.
For ISO tolerance charts, refer to pages 12-13.

MFPSEALS
www.mfpseals.com

MRTL - Metric Asymmetrical Twin Lip Rod Seal

A product of MFP Seals.

MRTL - METRIC ASYMMETRICAL TWIN-LIP ROD U-CUP

MFP Seals' MRTL Rod Seal U-Cup is an asymmetrical cup seal designed for use in hydraulic applications. The MRTL twin lip seal offers increased seal stability and superior sealing ability. This seal offers a knife trimmed lip for increased sealability. The design was enhanced using finite element analysis giving you the best product on the market. Produced from our U2151 compound, the seal offers extremely low compression set and excellent extrusion resistance.

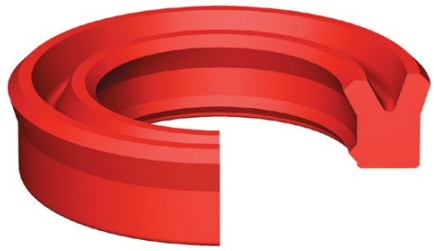

The standard compound for this seal is U2151. It is also available in compounds U2150, U4150 and H2155.

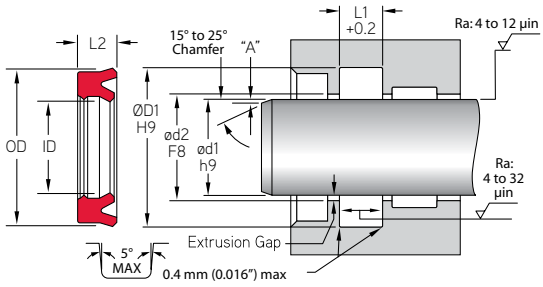

MFP PART NUMBER

MRTL-030X040X06.0U2151

SEAL TYPE | ød1 | ØD1 | L2 | COMPOUND

Pressure: 400 bar (5,800 psi) **Max. Velocity:** 0.5 m/s (< 1.6 ft./s)

MFP PART NUMBER	ROD APPLICATION ød1	ød2	ØD1	L2	L1
TOLERANCE	h9	F8	H9		+0.2
MRTL-012X020X05.7	12	12	20	5.7	6.3
MRTL-020X028X05.7	20	20	28	5.7	6.3
MRTL-022X030X05.7	22	22	30	5.7	6.3
MRTL-025X033X05.7	25	25	33	5.7	6.3
MRTL-030X038X05.7	30	30	38	5.7	6.3
MRTL-030X040X06.0	30	30	40	6	7
MRTL-030X040X10.0	30	30	40	10	11
MRTL-032X042X07.3	32	32	42	7.3	8
MRTL-035X043X06.3	35	35	43	6.3	7
MRTL-035X045X06.0	35	35	45	6	7
MRTL-040X050X06.0	40	40	50	6	7
MRTL-040X050X07.3	40	40	50	7.3	8
MRTL-040X050X10.0	40	40	50	10	11
MRTL-042X050X05.7	42	42	50	5.7	6.3
MRTL-045X053X05.7	45	45	53	5.7	6.3
MRTL-045X055X06.0	45	45	55	6	7
MRTL-045X055X07.3	45	45	55	7.3	8
MRTL-050X060X06.0	50	50	60	6	7
MRTL-050X060X07.3	50	50	60	7.3	8
MRTL-050X060X08.0	50	50	60	8	9
MRTL-050X060X10.0	50	50	60	10	11
MRTL-055X065X06.0	55	55	65	6	7

Surface Finish: ISO 4287 & Chamfer Information on pages 7-9.
For ISO tolerance charts, refer to pages 12-13.

Compound information available on pages 20-37.

MRTL - Metric Asymmetrical Twin Lip Rod Seal

A product of MFP Seals.

MFPSEALS®
www.mfpseals.com

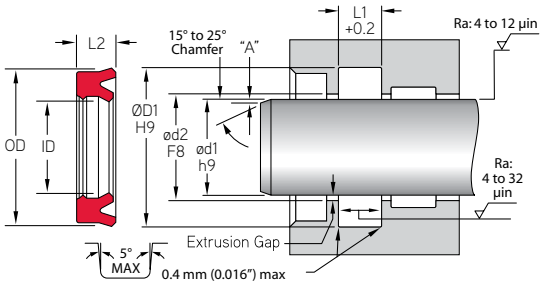

MFP PART NUMBER	ROD APPLICATION ød1	ød2	ØD1	L2	L1
TOLERANCE	h9	F8	H9		+0.2
MRTL-055X065X09.0	55	55	65	9	10
MRTL-055X065X10.0	55	55	65	10	11
MRTL-055X070X09.0	55	55	70	9	10
MRTL-060X070X06.0	60	60	70	6	7
MRTL-060X075X10.0	60	60	75	10	11
MRTL-060X075X11.8	60	60	75	11.8	13
MRTL-065X075X06.0	65	65	75	6	7
MRTL-065X080X09.0	65	65	80	9	10
MRTL-070X080X06.0	70	70	80	6	7
MRTL-070X085X09.0	70	70	85	9	10
MRTL-070X085X11.4	70	70	85	11.4	12.5
MRTL-075X090X09.0	75	75	90	9	10
MRTL-080X090X06.0	80	80	90	6	7
MRTL-080X095X09.0	80	80	95	9	10
MRTL-080X095X11.5	80	80	95	11.5	12.5
MRTL-085X100X09.0	85	85	100	9	10
MRTL-090X105X09.0	90	90	105	9	10
MRTL-090X105X11.4	90	90	105	11.4	12.5
MRTL-095X110X09.0	95	95	110	9	10
MRTL-100X115X09.0	100	100	115	9	10

Compound information available on pages 20-37.

Surface Finish: ISO 4287 & Chamfer Information on pages 7-9.
For ISO tolerance charts, refer to pages 12-13.

MFP SEALS
www.mfpseals.com

MSUC - Metric Symmetrical U-Cup

A product of MFP Seals.

MSUC - METRIC SYMMETRICAL U-CUP

MFP Seals' MSUC symmetrical U-Cup is suitable for rod and piston applications. The MSUC features a knife trimmed sealing lip for increased sealing ability and the design was enhanced using finite element analysis giving you the best product on the market. Produced from our U2151 compound the seal offers extremely low compression set and excellent extrusion resistance.

The standard compound for this seal is U2151. It is also available in compounds U2145, U2150, U2162, U4150 and H2155.

MFP PART NUMBER

MSUC-006X012X04.0U2151

SEAL TYPE | ød1 | ØD1 | L2 | COMPOUND

PROFILE

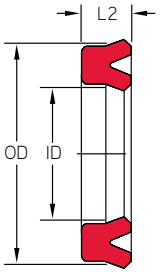

ROD APPLICATION

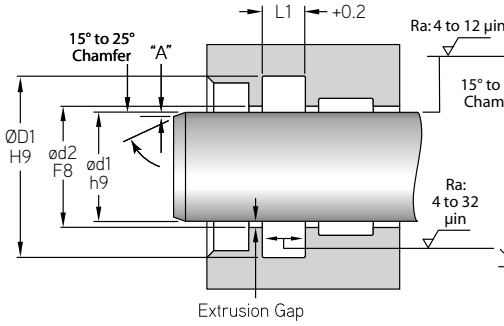

PISTON APPLICATION

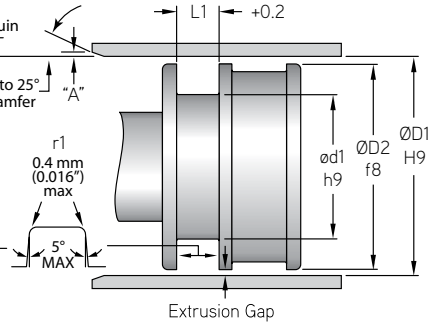

Pressure: 400 bar (5,800 psi) **Max. Velocity:** 0.5 m/s (< 1.6 ft./s)

MFP PART NUMBER	ød1	ød2	ØD1	ØD2	L2	L1
	ROD OR PISTON APPLICATION					
TOLERANCE	h9	F8	H9	f8		+0.2
MSUC-006X012X04.0	6	6	12	12	4	4.5
MSUC-006X012X06.0	6	6	12	12	6	7
MSUC-008X014X06.0	8	8	14	14	6	7
MSUC-008X016X06.0	8	8	16	16	6	7
MSUC-008X016X08.0	8	8	16	16	8	9
MSUC-010X015X03.0	10	10	15	15	3	4
MSUC-010X016X04.5	10	10	16	16	4.5	5.5
MSUC-010X018X06.0	10	10	18	18	6	6.6
MSUC-012X019X05.0	12	12	19	19	5	6
MSUC-015X021X04.0	15	15	21	21	4	5
MSUC-016X024X05.0	16	16	24	24	5	5.7
MSUC-018X026X05.0	18	18	26	26	5	5.7
MSUC-018X026X08.0	18	18	26	26	8	9
MSUC-020X026X05.0	20	20	26	26	5	6
MSUC-020X028X04.0	20	20	28	28	4	5
MSUC-020X028X05.0	20	20	28	28	5	5.7
MSUC-020X032X08.0	20	20	32	32	8	9

Surface Finish: ISO 4287 & Chamfer Information on pages 7-9.
For ISO tolerance charts, refer to pages 12-13.

Compound information available on pages 20-37.

MSUC - Metric Symmetrical U-Cup

A product of MFP Seals.

MFPSEALS®
www.mfpseals.com

PROFILE **ROD APPLICATION** **PISTON APPLICATION**

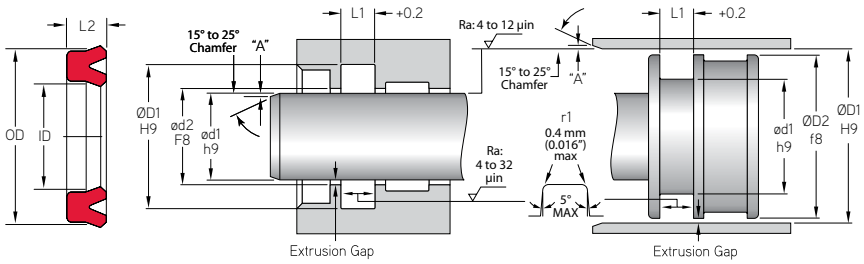

MFP PART NUMBER	ROD OR PISTON APPLICATION ød1	ød2	ØD1	ØD2	L2	L1
TOLERANCE	h9	F8	H9	f8		+0.2
MSUC-022x030x04.0	22	22	30	30	4	5
MSUC-025X033X05.0	25	25	33	33	5	5.7
MSUC-025X040X10.0	25	25	40	40	10	11
MSUC-028X036X05.0	28	28	36	36	5	6
MSUC-030X040X06.0	30	30	40	40	6	7
MSUC-030X040X07.0	30	30	40	40	7	8
MSUC-030X040X08.0	30	30	40	40	8	9
MSUC-030X040X10.0	30	30	40	40	10	11
MSUC-035X045X06.0	35	35	45	45	6	7
MSUC-035X045X07.0	35	35	45	45	7	8
MSUC-035X045X10.0	35	35	45	45	10	11
MSUC-040X048X06.0	40	40	48	48	6	7
MSUC-040X048X08.0	40	40	48	48	8	9
MSUC-040X050X06.0	40	40	50	50	6	7
MSUC-040X050X07.0	40	40	50	50	7	8
MSUC-040X050X08.0	40	40	50	50	8	9
MSUC-040X050X10.0	40	40	50	50	10	11
MSUC-045X055X06.0	45	45	55	55	6	7
MSUC-045X055X07.0	45	45	55	55	7	8
MSUC-045X055X10.0	45	45	55	55	10	11
MSUC-045X060X10.0	45	45	60	60	10	11
MSUC-050X060X06.0	50	50	60	60	6	7
MSUC-050X060X07.0	50	50	60	60	7	8
MSUC-050X060X08.0	50	50	60	60	8	9
MSUC-052X062X06.0	52	52	62	62	6	7
MSUC-053X063X06.0	53	53	63	63	6	7
MSUC-055X065X06.0	55	55	65	65	6	7
MSUC-060X070X06.0	60	60	70	70	6	7
MSUC-060X072X10.0	60	60	72	72	10	11
MSUC-065X075X06.0	65	65	75	75	6	7
MSUC-070X080X06.0	70	70	80	80	6	7
MSUC-070X090X12.0	70	70	90	90	12	13
MSUC-075X085X06.0	75	75	85	85	6	7
MSUC-080X090X06.0	80	80	90	90	6	7
MSUC-085X100X09.0	85	85	100	100	9	10
MSUC-090X105X09.0	90	90	105	105	9	10
MSUC-090X115X09.0	90	90	115	115	9	10
MSUC-095X110X09.0	95	95	110	110	9	10

Compound information available on pages 20-37.

Surface Finish: ISO 4287 & Chamfer Information on pages 7-9.
For ISO tolerance charts, refer to pages 12-13.

MFPSEALS
www.mfpseals.com

Metric X-PAC® Loaded B-Lip - Symmetrical U-Cup

A product of MFP Seals.

MXP - METRIC X-PAC® LOADED B-LIP SYMMETRICAL U-CUP

Metric X-PAC® U-Cups are a very versatile reciprocating seal design, for use up to 350 bar (5,000 psi). The rubber expander creates a compression style seal while still operating as a pressure actuated U-Cup design. The result is better low-pressure sealing and less startup leakage.
The primary function of the B-Lip X-PAC® is for linear rod applications. However, they can also be used for piston applications when straight lip tooling is not available. MFP Seals' X-PAC® U-Cups feature a knife trimmed sealing lip for increased sealability.

Glands must be a minimum of 110% of the height of seal used. Free space is necessary to allow for the thermal expansion of the seal material and swell due to the effects of the system fluids. Pressure must be able to contact both sealing lips.

The standard compound for this seal is U2145. It is also available in compounds U2150, U2151, U2162, U4150 and H2155, with an N6014 X-Ring expander.

MFP PART NUMBER

MXP-008X016X05.7BU2145

SEAL TYPE | ød1 | ØD1 | L2 | PROFILE STYLE | COMPOUND

Pressure: 350 bar (5,000 psi) **Max. Velocity:** 0.5 m/s (< 1.6 ft./s)

PROFILE

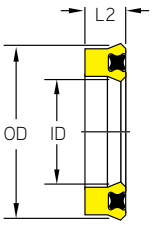

ROD APPLICATION

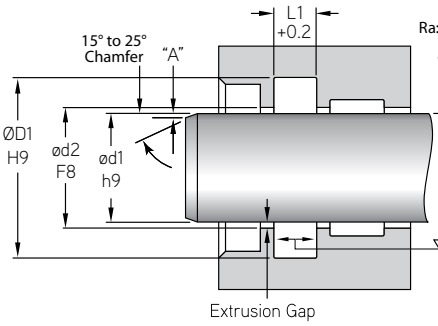

PISTON APPLICATION

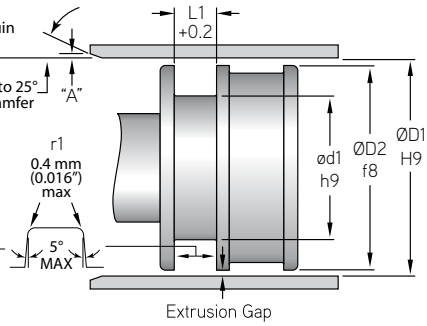

MFP PART NUMBER	ROD OR PISTON APPLICATION					
	ød1	ød2	ØD1	ØD2	L2	L1
TOLERANCE	h9	F8	H9	f8		+0.2
MXP-008X016X05.7B	8	8	16	16	5.7	6.7
MXP-009X017X05.7B	9	9	17	17	5.7	6.7
MXP-009X019X08.0B	9	9	19	19	8	9
MXP-010X016X06.3B	10	10	16	16	6.3	7.3
MXP-010X018X05.7B	10	10	18	18	5.7	6.7
MXP-010X018X08.0B	10	10	18	18	8	9
MXP-010X020X08.0B	10	10	20	20	8	9
MXP-011.2X019.2X05.0B	11.2	11.2	19.2	19.2	5	6
MXP-012X018X06.0B	12	12	18	18	6	7
MXP-012X019X04.6B	12	12	19	19	4.6	5.6
MXP-012X020X05.0B	12	12	20	20	5	6
MXP-012X020X06.4B	12	12	20	20	6.4	7.4
MXP-012X020X07.3B	12	12	20	20	7.3	8.3

Surface Finish: ISO 4287 & Chamfer Information on pages 7-9.
For ISO tolerance charts, refer to pages 12-13.

Compound information available on pages 20-37.

Metric X-PAC® Loaded B-Lip - Symmetrical U-Cup

A product of MFP Seals.

MFPSEALS®
www.mfpseals.com

PROFILE **ROD APPLICATION** **PISTON APPLICATION**

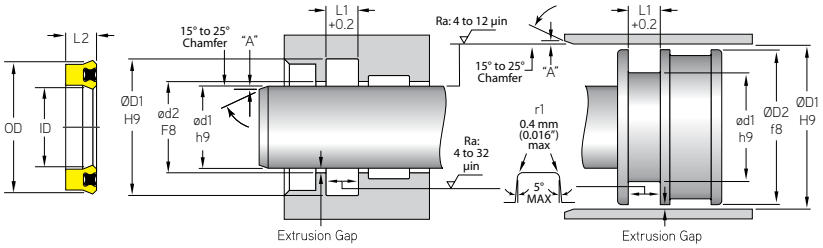

MFP PART NUMBER	ROD OR PISTON APPLICATION ød1	ød2	ØD1	ØD2	L2	L1
TOLERANCE	h9	F8	H9	f8		+0.2
MXP-012X022X06.0B	12	12	22	22	6	7
MXP-012X022X07.3B	12	12	22	22	7.3	8.3
MXP-012X022X08.0B	12	12	22	22	8	9
MXP-012.5X022.5X08.0B	12.5	12.5	22.5	22.5	8	9
MXP-013X019X04.0B	13	13	19	19	4	5
MXP-014X021X04.6B	14	14	21	21	4.6	5.6
MXP-014X022X05.0B	14	14	22	22	5	6
MXP-014X024X05.5B	14	14	24	24	5.5	6.5
MXP-014X024X08.0B	14	14	24	24	8	9
MXP-015X022X05.0B	15	15	22	22	5	6
MXP-015X025X08.0B	15	15	25	25	8	9
MXP-016X022X04.0B	16	16	22	22	4	5
MXP-016X024X05.0B	16	16	24	24	5	6
MXP-016X024X08.0B	16	16	24	24	8	9
MXP-016X026X08.0B	16	16	26	26	8	9
MXP-017X025X10.0B	17	17	25	25	10	11
MXP-018X025X04.6B	18	18	25	25	4.6	5.6
MXP-018X026X05.0B	18	18	26	26	5	6
MXP-018X026X05.2B	18	18	26	26	5.2	6.2
MXP-018X028X08.0B	18	18	28	28	8	9
MXP-020X026X05.0B	20	20	26	26	5	6
MXP-020X027X06.0B	20	20	27	27	6	7
MXP-020X028X05.0B	20	20	28	28	5	6
MXP-020X028X05.7B	20	20	28	28	5.7	6.7
MXP-020X028X07.2B	20	20	28	28	7.2	8.2
MXP-020X030X06.0B	20	20	30	30	6	7
MXP-020X030X07.2B	20	20	30	30	7.2	8.2
MXP-020X030X08.0B	20	20	30	30	8	9
MXP-020X032X06.0B	20	20	32	32	6	7
MXP-020X032X08.0B	20	20	32	32	8	9
MXP-020X035X10.0B	20	20	35	35	10	11
MXP-020X035X12.0B	20	20	35	35	12	13
MXP-020X040X12.0B	20	20	40	40	12	13
MXP-022X028X05.3B	22	22	28	28	5.3	6.3
MXP-022X029X04.6B	22	22	29	29	4.6	5.6
MXP-022X030X05.0B	22	22	30	30	5	6
MXP-022X030X05.7B	22	22	30	30	5.7	6.7
MXP-022X030X06.0B	22	22	30	30	6	7
MXP-022X030X07.0B	22	22	30	30	7	8

Compound information available on pages 20-37.

Surface Finish: ISO 4287 & Chamfer Information on pages 7-9.
For ISO tolerance charts, refer to pages 12-13.

MFPSEALS®
www.mfpseals.com

Metric X-PAC® Loaded B-Lip - Symmetrical U-Cup

A product of MFP Seals.

PROFILE **ROD APPLICATION** **PISTON APPLICATION**

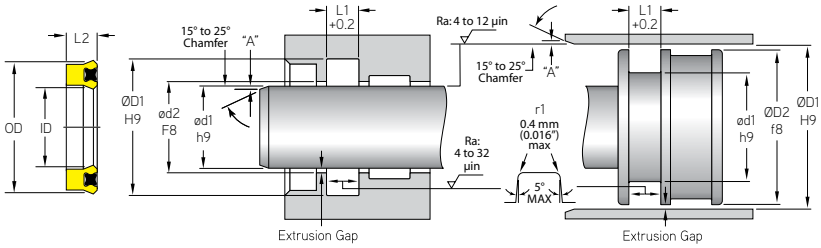

MFP PART NUMBER	ROD OR PISTON APPLICATION ød1	ød2	ØD1	ØD2	L2	L1
TOLERANCE	h9	F8	H9	f8		+0.2
MXP-022X030X07.2B	22	22	30	30	7.2	8.2
MXP-022X030X08.0B	22	22	30	30	8	9
MXP-022X032X06.0B	22	22	32	32	6	7
MXP-022X032X07.3B	22	22	32	32	7.3	8.3
MXP-022X032.4X08.0B	22	22	32.4	32.4	8	9
MXP-022X035X08.0B	22	22	35	35	8	9
MXP-022X035X10.0B	22	22	35	35	10	11
MXP-022X040X12.0B	22	22	40	40	12	13
MXP-022.4X030X05.0B	22.4	22.4	30	30	5	6
MXP-022.4X032.4X08.0B	22.4	22.4	32.4	32.4	8	9
MXP-23.5X31.5X05.0B	23.5	23.5	31.5	31.5	5	6
MXP-025X033X05.0B	25	25	33	33	5	6
MXP-025X033X05.5B	25	25	33	33	5.5	6.5
MXP-025X033X08.0B	25	25	33	33	8	9
MXP-025X033X10.0B	25	25	33	33	10	11
MXP-025X035X07.3B	25	25	35	35	7.3	8.3
MXP-025X035X08.0B	25	25	35	35	8	9
MXP-025X035X10.0B	25	25	35	35	10	11
MXP-025X038X08.0B	25	25	38	38	8	9
MXP-025X038X10.0B	25	25	38	38	10	11
MXP-025X040X10.0B	25	25	40	40	10	11
MXP-028X035.5X05.0B	28	28	35.5	35.5	5	6
MXP-028X036X05.3B	28	28	36	36	5.3	6.3
MXP-028X036X08.0B	28	28	36	36	8	9
MXP-028X037.5X07.8B	28	28	37.5	37.5	7.8	8.8
MXP-028X038X10.0B	28	28	38	38	10	11
MXP-028X040X10.0B	28	28	40	40	10	11
MXP-028X043X10.2B	28	28	43	43	10.2	11.2
MXP-028X048X12.0B	28	28	48	48	12	13
MXP-030X037X06.0B	30	30	37	37	6	7
MXP-030X038X05.7B	30	30	38	38	5.7	6.7
MXP-030X038X06.3B	30	30	38	38	6.3	7.3
MXP-030X038X08.0B	30	30	38	38	8	9
MXP-030X040X06.0B	30	30	40	40	6	7
MXP-030X040X06.5B	30	30	40	40	6.5	7.5
MXP-030X040X07.0B	30	30	40	40	7	8
MXP-030X040X07.3B	30	30	40	40	7.3	8.3
MXP-030X040X10.0B	30	30	40	40	10	11
MXP-030X042X09.0B	30	30	42	42	9	10

Surface Finish: ISO 4287 & Chamfer Information on pages 7-9.
For ISO tolerance charts, refer to pages 12-13.

Compound information available on pages 20-37.

Metric X-PAC® Loaded B-Lip - Symmetrical U-Cup

A product of MFP Seals.

MFPSEALS®
www.mfpseals.com

PROFILE **ROD APPLICATION** **PISTON APPLICATION**

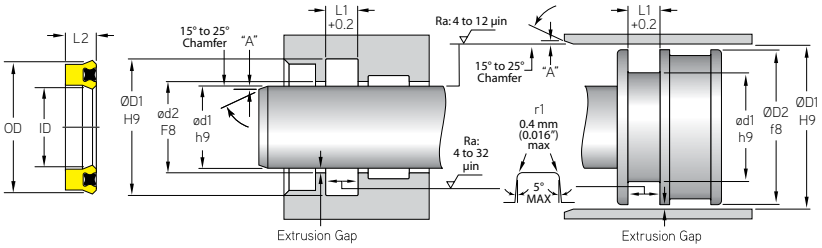

MFP PART NUMBER	ROD OR PISTON APPLICATION ød1	ød2	ØD1	ØD2	L2	L1
TOLERANCE	h9	F8	H9	f8		+0.2
MXP-030X042X10.0B	30	30	42	42	10	11
MXP-030X045X09.0B	30	30	45	45	9	10
MXP-030X045X09.3B	30	30	45	45	9.3	10.3
MXP-030X045X10.0B	30	30	45	45	10	11
MXP-030X050X10.0B	30	30	50	50	10	11
MXP-031.5X041.5X06.0B	31.5	31.5	41.5	41.5	6	7
MXP-032X040X05.7B	32	32	40	40	5.7	6.7
MXP-032X040X05.7B	32	32	40	40	7.5	8.5
MXP-032X040X08.0B	32	32	40	40	8	9
MXP-032X042X07.3B	32	32	42	42	7.3	8.3
MXP-032X042X10.0B	32	32	42	42	10	11
MXP-032X044X05.0B	32	32	44	44	5	6
MXP-032X044X05.5B	32	32	44	44	5.5	6.5
MXP-032X044X06.3B	32	32	44	44	6.3	7.3
MXP-032X045X10.0B	32	32	45	45	10	11
MXP-032X047X10.0B	32	32	47	47	10	11
MXP-032X048X10.0B	32	32	48	48	10	11
MXP-033X040X08.0B	33	33	40	40	8	9
MXP-033X043X10.0B	33	33	43	43	10	11
MXP-035X042X08.0B	35	35	42	42	8	9
MXP-035X043X06.4B	35	35	43	43	6.4	7.4
MXP-035X043X08.0B	35	35	43	43	8	9
MXP-035X045X06.0B	35	35	45	45	6	7
MXP-035X045X07.3B	35	35	45	45	7.3	8.3
MXP-035X045X08.0B	35	35	45	45	8	9
MXP-035X045X10.0B	35	35	45	45	10	11
MXP-035X050X10.0B	35	35	50	50	10	11
MXP-035X050X11.4B	35	35	50	50	11.4	12.4
MXP-035X051X10.0B	35	35	51	51	10	11
MXP-035X055X10.0B	35	35	55	55	10	11
MXP-035.5X045X06.0B	35.5	35.5	45	45	6	7
MXP-036X043X05.3B	36	36	43	43	5.3	6.3
MXP-036X044X06.0B	36	36	44	44	6	7
MXP-036X044X08.0B	36	36	44	44	8	9
MXP-036X046X07.3B	36	36	46	46	7.3	8.3
MXP-036X046X10.0B	36	36	46	46	10	11
MXP-036X052X10.0B	36	36	52	52	10	11
MXP-037X047X08.0B	37	37	47	47	8	9
MXP-040X048X05.0B	40	40	48	48	5	6

Compound information available on pages 20-37.

Surface Finish: ISO 4287 & Chamfer Information on pages 7-9.
For ISO tolerance charts, refer to pages 12-13.

MFPSEALS®
www.mfpseals.com

Metric X-PAC® Loaded B-Lip - Symmetrical U-Cup

A product of MFP Seals.

PROFILE **ROD APPLICATION** **PISTON APPLICATION**

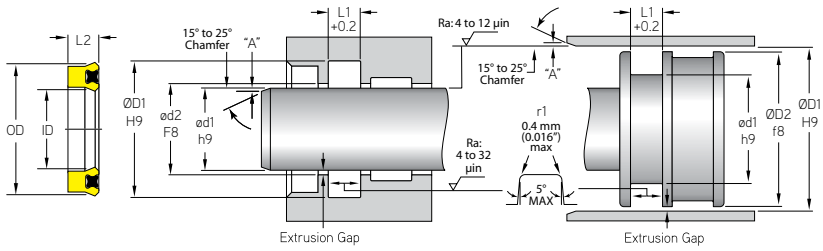

MFP PART NUMBER	ROD OR PISTON APPLICATION ød1	ød2	ØD1	ØD2	L2	L1
TOLERANCE	h9	F8	H9	f8		+0.2
MXP-040X048X05.7B	40	40	48	48	5.7	6.7
MXP-040X048X06.0B	40	40	48	48	6	7
MXP-040X048X08.0B	40	40	48	48	8	9
MXP-040X050X06.0B	40	40	50	50	6	7
MXP-040X050X06.5B	40	40	50	50	6.5	7.5
MXP-040X050X07.0B	40	40	50	50	7	8
MXP-040X050X07.3B	40	40	50	50	7.3	8.3
MXP-040X050X08.0B	40	40	50	50	8	9
MXP-040X050X10.0B	40	40	50	50	10	11
MXP-040X053X08.0B	40	40	53	53	8	9
MXP-040X055X09.0B	40	40	55	55	9	10
MXP-040X055X10.0B	40	40	55	55	10	11
MXP-040X056X10.0B	40	40	56	56	10	11
MXP-040X060X12.0B	40	40	60	60	12	13
MXP-041.7X050.7X07.1B	41.7	41.7	50.7	50.7	7.1	8.1
MXP-042X050X06.0B	42	42	50	50	6	7
MXP-042X055X07.0B	42	42	55	55	7	8
MXP-045X053X05.0B	45	45	53	53	5	6
MXP-045X053X08.0B	45	45	53	53	8	9
MXP-045X055X06.0B	45	45	55	55	6	7
MXP-045X055X07.3B	45	45	55	55	7.3	8.3
MXP-045X055X10.0B	45	45	55	55	10	11
MXP-045X056X07.0B	45	45	56	56	7	8
MXP-045X060X09.0B	45	45	60	60	9	10
MXP-045X060X10.0B	45	45	60	60	10	11
MXP-045X060X11.5B	45	45	60	60	11.5	12.5
MXP-045X065X12.0B	45	45	65	65	12	13
MXP-045X070X15.0B	45	45	70	70	15	16
MXP-048X063X10.2B	48	48	63	63	10.2	11.2
MXP-048X068X12.0B	48	48	68	68	12	13
MXP-050X058X08.0B	50	50	58	58	8	9
MXP-050X060X06.0B	50	50	60	60	6	7
MXP-050X060X07.3B	50	50	60	60	7.3	8.3
MXP-050X060X08.0B	50	50	60	60	8	9
MXP-050X060X10.0B	50	50	60	60	10	11
MXP-050X060X12.0B	50	50	60	60	12	13
MXP-050X063X08.0B	50	50	63	63	8	9
MXP-050X063X10.0B	50	50	63	63	10	11
MXP-050X065X09.0B	50	50	65	65	9	10

Surface Finish: ISO 4287 & Chamfer Information on pages 7-9.
For ISO tolerance charts, refer to pages 12-13.

Compound information available on pages 20-37.

Metric X-PAC® Loaded B-Lip - Symmetrical U-Cup

A product of MFP Seals.

MFPSEALS®
www.mfpseals.com

PROFILE **ROD APPLICATION** **PISTON APPLICATION**

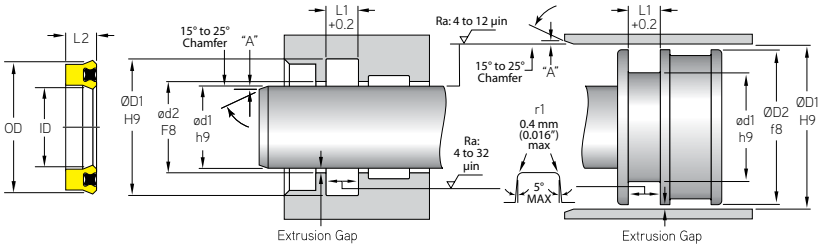

MFP PART NUMBER	ROD OR PISTON APPLICATION ød1	ød2	ØD1	ØD2	L2	L1
TOLERANCE	h9	F8	H9	f8		+0.2
MXP-050X065X10.0B	50	50	65	65	10	11
MXP-050X065X11.4B	50	50	65	65	11.4	12.4
MXP-050X070X10.0B	50	50	70	70	10	11
MXP-050X070X12.0B	50	50	70	70	12	13
MXP-053X063X06.0B	53	53	63	63	6	7
MXP-053X063X06.5B	53	53	63	63	6.5	7.5
MXP-053X063X07.3B	53	53	63	63	7.3	8.3
MXP-053X063X10.0B	53	53	63	63	10	11
MXP-055X065X06.0B	55	55	65	65	6	7
MXP-055X065X07.3B	55	55	65	65	7.3	8.3
MXP-055X065X10.0B	55	55	65	65	10	11
MXP-055X065X12.0B	55	55	65	65	12	13
MXP-055X068X10.0B	55	55	68	68	10	11
MXP-055X070X09.0B	55	55	70	70	9	10
MXP-055X070X12.0B	55	55	70	70	12	13
MXP-055X075X12.0B	55	55	75	75	12	13
MXP-055X080X15.0B	55	55	80	80	15	16
MXP-056X064X08.0B	56	56	64	64	8	9
MXP-056X066X07.3B	56	56	66	66	6	7
MXP-056X066X10.0B	56	56	66	66	10	11
MXP-056X071X11.4B	56	56	71	71	11.4	12.4
MXP-057X070X09.0B	57	57	70	70	9	10
MXP-060X068X08.0B	60	60	68	68	8	9
MXP-060X070X06.0B	60	60	70	70	6	7
MXP-060X070X07.3B	60	60	70	70	7.3	8.3
MXP-060X070X08.0B	60	60	70	70	8	9
MXP-060X070X09.0B	60	60	70	70	9	10
MXP-060X070X10.0B	60	60	70	70	10	11
MXP-060X070X12.0B	60	60	70	70	12	13
MXP-060X071X07.0B	60	60	71	71	7	8
MXP-060X073X10.0B	60	60	73	73	10	11
MXP-060X075X09.0B	60	60	75	75	9	10
MXP-060X075X10.0B	60	60	75	75	10	11
MXP-060X075X11.0B	60	60	75	75	11	12
MXP-060X080X12.0B	60	60	80	80	12	13
MXP-060X080X14.5B	60	60	80	80	14.5	15.5
MXP-062X072X12.0B	62	62	72	72	12	13
MXP-063X071X08.0B	63	63	71	71	8	9
MXP-063X073X06.0B	63	63	73	73	6	7

Compound information available on pages 20-37.

Surface Finish: ISO 4287 & Chamfer Information on pages 7-9.
For ISO tolerance charts, refer to pages 12-13.

MFPSEALS®
www.mfpseals.com

Metric X-PAC® Loaded B-Lip - Symmetrical U-Cup

A product of MFP Seals.

PROFILE **ROD APPLICATION** **PISTON APPLICATION**

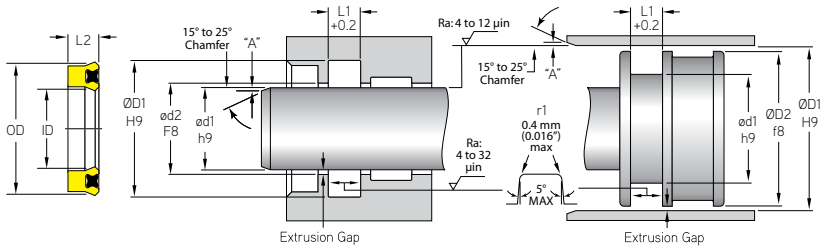

	ROD OR PISTON APPLICATION					
MFP PART NUMBER	**ød1**	**ød2**	**ØD1**	**ØD2**	**L2**	**L1**
TOLERANCE	h9	F8	H9	f8		+0.2
MXP-063X073X12.0B	63	63	73	73	12	13
MXP-063X075X08.7B	63	63	75	75	8.7	9.7
MXP-063X078X10.6B	63	63	78	78	10.6	11.6
MXP-063X078X11.4B	63	63	78	78	11.4	12.4
MXP-063X083X15.0B	63	63	83	83	15	16
MXP-064X080X12.0B	64	64	80	80	12	13
MXP-065X073X08.0B	65	65	73	73	8	9
MXP-065X075X06.0B	65	65	75	75	6	7
MXP-065X075X08.0B	65	65	75	75	8	9
MXP-065X075X10.0B	65	65	75	75	10	11
MXP-065X075X12.0B	65	65	75	75	12	13
MXP-065X078X10.0B	65	65	78	78	10	11
MXP-065X080X09.0B	65	65	80	80	9	10
MXP-065X080X10.0B	65	65	80	80	10	11
MXP-065X080X11.4B	65	65	80	80	11.4	12.4
MXP-065X080X12.0B	65	65	80	80	12	13
MXP-065X085X12.0B	65	65	85	85	12	13
MXP-067X077X06.0B	67	67	77	77	6	7
MXP-070X078X08.0B	70	70	78	78	8	9
MXP-070X080X06.0B	70	70	80	80	6	7
MXP-070X080X10.0B	70	70	80	80	10	11
MXP-070X080X12.0B	70	70	80	80	12	13
MXP-070X083X10.0B	70	70	83	83	10	11
MXP-070X085X09.0B	70	70	85	85	9	10
MXP-070X085X10.0B	70	70	85	85	10	11
MXP-070X085X11.4B	70	70	85	85	11.4	12.4
MXP-070X085X12.0B	70	70	85	85	12	13
MXP-070X090X12.0B	70	70	90	90	12	13
MXP-070X090X15.0B	70	70	90	90	15	16
MXP-071X080X06.0B	71	71	80	80	6	7
MXP-071X080X06.5B	71	71	80	80	6.5	7.5
MXP-072X082X08.0B	72	72	82	82	8	9
MXP-072X087X09.0B	72	72	87	87	9	10
MXP-075X083X06.0B	75	75	83	83	6	7
MXP-075X085X06.0B	75	75	85	85	6	7
MXP-075X085X08.0B	75	75	85	85	8	9
MXP-075X085X10.0B	75	75	85	85	10	11
MXP-075X085X12.0B	75	75	85	85	12	13
MXP-075X090X09.0B	75	75	90	90	9	10

Surface Finish: ISO 4287 & Chamfer Information on pages 7-9.
For ISO tolerance charts, refer to pages 12-13.

Compound information available on pages 20-37.

Metric X-PAC® Loaded B-Lip - Symmetrical U-Cup

A product of MFP Seals.

MFPSEALS®
www.mfpseals.com

PROFILE **ROD APPLICATION** **PISTON APPLICATION**

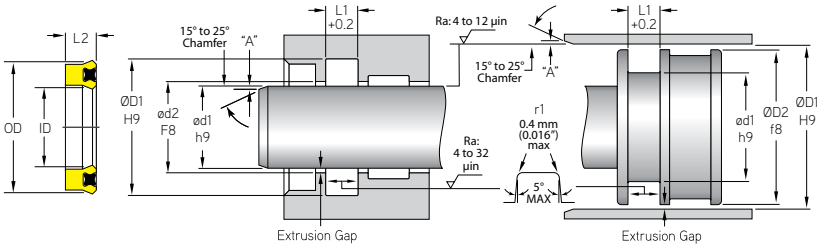

	ROD OR PISTON APPLICATION					
MFP PART NUMBER	**ød1**	**ød2**	**ØD1**	**ØD2**	**L2**	**L1**
TOLERANCE	h9	F8	H9	f8		+0.2
MXP-075X090X10.0B	75	75	90	90	10	11
MXP-075X090X11.0B	75	75	90	90	11	12
MXP-075X090X11.4B	75	75	90	90	11.4	12.4
MXP-075X095X12.0B	75	75	95	95	12	13
MXP-075X100X15.0B	75	75	100	100	15	16
MXP-078X090X11.0B	78	78	90	90	11	12
MXP-080X088X08.0B	80	80	88	88	8	9
MXP-080X090X06.0B	80	80	90	90	6	7
MXP-080X090X08.0B	80	80	90	90	8	9
MXP-080X090X10.0B	80	80	90	90	10	11
MXP-080X090X12.0B	80	80	90	90	12	13
MXP-080X092X09.5B	80	80	92	92	9.5	10.5
MXP-080X093X10.0B	80	80	93	93	10	11
MXP-080X095X09.0B	80	80	95	95	9	10
MXP-080X095X11.0B	80	80	95	95	11	12
MXP-080X095X11.4B	80	80	95	95	11.4	12.4
MXP-080X100X12.0B	80	80	100	100	12	13
MXP-080X100X14.5B	80	80	100	100	14.5	15.5
MXP-080X100X15.0B	80	80	100	100	15	16
MXP-082X092X10.0B	82	82	92	92	10	11
MXP-084X098X12.0B	84	84	98	98	12	13
MXP-085X100X09.0B	85	85	100	100	9	10
MXP-085X100X10.0B	85	85	100	100	10	11
MXP-085X100X12.0B	85	85	100	100	12	13
MXP-085X105X12.0B	85	85	105	105	12	13
MXP-085X105X14.5B	85	85	105	105	14.5	15.5
MXP-088X102X10.5B	88	88	102	102	10.5	11.5
MXP-090X098X08.0B	90	90	98	98	8	9
MXP-090X100X06.0B	90	90	100	100	6	7
MXP-090X100X07.0B	90	90	100	100	7	8
MXP-090X105X09.0B	90	90	105	105	9	10
MXP-090X105X10.0B	90	90	105	105	10	11
MXP-090X105X11.4B	90	90	105	105	11.4	12.4
MXP-090X105X12.0B	90	90	105	105	12	13
MXP-090X105X10.0B	90	90	105	105	10	11
MXP-090X105X11.4B	90	90	105	105	11.4	12.4
MXP-090X105X12.0B	90	90	105	105	12	13
MXP-090X110X12.0B	90	90	110	110	12	13
MXP-090X110X14.5B	90	90	110	110	14.5	15.5

Compound information available on pages 20-37.

Surface Finish: ISO 4287 & Chamfer Information on pages 7-9.
For ISO tolerance charts, refer to pages 12-13.

MFPSEALS®
www.mfpseals.com

Metric X-PAC® Loaded B-Lip - Symmetrical U-Cup

A product of MFP Seals.

PROFILE **ROD APPLICATION** **PISTON APPLICATION**

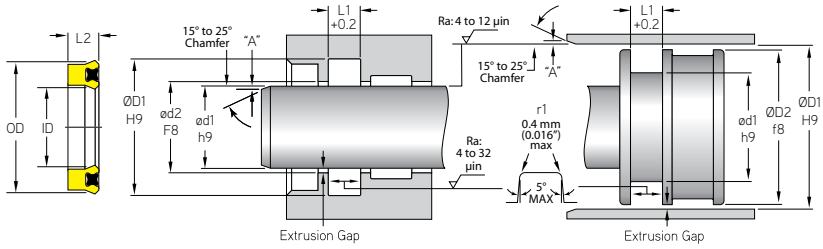

	ROD OR PISTON APPLICATION					
MFP PART NUMBER	**ød1**	**ød2**	**ØD1**	**ØD2**	**L2**	**L1**
TOLERANCE	h9	F8	H9	f8		+0.2
MXP-095X105X06.0B	95	95	105	105	6	7
MXP-095X110X09.0B	95	95	110	110	9	10
MXP-095X110X10.0B	95	95	110	110	10	11
MXP-095X110X11.4B	95	95	110	110	11.4	12.4
MXP-095X110X12.0B	95	95	110	110	12	13
MXP-095X110X09.0B	95	95	110	110	9	10
MXP-095X110X10.0B	95	95	110	110	10	11
MXP-095X110X12.0B	95	95	110	110	12	13
MXP-095X115X12.0B	95	95	115	115	12	13
MXP-097X105X13.0B	97	97	105	105	13	14
MXP-098X110X16.0B	98	98	110	110	16	17
MXP-098X112X10.5B	98	98	112	112	10.5	11.5
MXP-100X050.7X07.1B	100	100	108	108	8	9
MXP-100X115X09.0B	100	100	115	115	9	10
MXP-100X115X10.0B	100	100	115	115	10	11
MXP-100X115X12.0B	100	100	115	115	12	13
MXP-100X115X09.0B	100	100	115	115	9	10
MXP-100X115X10.0B	100	100	115	115	10	11
MXP-100X115X12.0B	100	100	115	115	12	13
MXP-100X120X12.0B	100	100	120	120	12	13
MXP-100X120X14.5B	100	100	120	120	14.5	15.5
MXP-100X125X12.4B	100	100	125	125	12.4	13.4
MXP-100X125X15.0B	100	100	125	125	15	16
MXP-100X125X18.0B	100	100	125	125	18	19
MXP-105X120X09.0B	105	105	120	120	9	10
MXP-105X120X09.0B	105	105	120	120	9	10
MXP-105X125X11.4B	105	105	125	125	11.4	12.4
MXP-105X125X12.0B	105	105	125	125	12	13
MXP-105X125X15.0B	105	105	125	125	15	16
MXP-106X120X08.5B	106	106	120	120	8.5	9.5
MXP-110X125X09.0B	110	110	125	125	9	10
MXP-110X125X09.2B	110	110	125	125	9.2	10.2
MXP-110X125X10.0B	110	110	125	125	10	11
MXP-110X125X11.4B	110	110	125	125	11.4	12.4
MXP-110X125X12.0B	110	110	125	125	12	13
MXP-110X125X09.0B	110	110	125	125	9	10
MXP-110X125X09.2B	110	110	125	125	9.2	10.2
MXP-110X125X10.0B	110	110	125	125	10	11
MXP-110X125X12.0B	110	110	125	125	12	13

Surface Finish: ISO 4287 & Chamfer Information on pages 7-9.
For ISO tolerance charts, refer to pages 12-13.

Compound information available on pages 20-37.

Metric X-PAC® Loaded B-Lip - Symmetrical U-Cup

A product of MFP Seals.

MFPSEALS®
www.mfpseals.com

PROFILE **ROD APPLICATION** **PISTON APPLICATION**

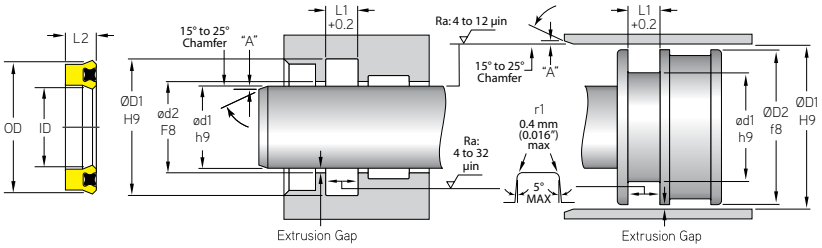

MFP PART NUMBER	ROD OR PISTON APPLICATION ød1	ød2	ØD1	ØD2	L2	L1
TOLERANCE	h9	F8	H9	f8		+0.2
MXP-110X130X12.0B	110	110	130	130	12	13
MXP-110X130X14.5B	110	110	130	130	14.5	15.5
MXP-110X130X15.0B	110	110	130	130	15	16
MXP-110X135X18.0B	110	110	135	135	18	19
MXP-112X125X07.0B	112	112	125	125	7	8
MXP-112X125X09.0B	112	112	125	125	9	10
MXP-115X130X08.5B	115	115	130	130	8.5	9.5
MXP-115X130X11.4B	115	115	130	130	11.4	12.4
MXP-115X130X08.5B	115	115	130	130	8.5	9.5
MXP-115X135X12.0B	115	115	135	135	12	13
MXP-115X140X18.0B	115	115	140	140	18	19
MXP-118X133X09.0B	118	118	133	133	9	10
MXP-120X130X15.0B	120	120	130	130	15	16
MXP-120X135X09.0B	120	120	135	135	9	10
MXP-120X135X011.4B	120	120	135	135	11.4	12.4
MXP-120X135X09.0B	120	120	135	135	9	10
MXP-120X135X15.0B	120	120	135	135	15	16
MXP-120X140X10.0B	120	120	140	140	10	11
MXP-120X140X12.0B	120	120	140	140	12	13
MXP-120X140X14.5B	120	120	140	140	14.5	15.5
MXP-120X140X15.0B	120	120	140	140	15	16
MXP-125X135X15.0B	125	125	135	135	15	16
MXP-125X140X09.0B	125	125	140	140	9	10
MXP-125X140X11.4B	125	125	140	140	11.4	12.4
MXP-125X140X09.0B	125	125	140	140	9	10
MXP-125X145X14.5B	125	125	145	145	14.5	15.5
MXP-125X145X15.0B	125	125	145	145	15	16
MXP-125X150X12.0B	125	125	150	150	12	13
MXP-125X150X18.0B	125	125	150	150	18	19
MXP-130X145X09.0B	130	130	145	145	9	10
MXP-130X145X09.0B	130	130	145	145	9	10
MXP-130X150X12.0B	130	130	150	150	12	13
MXP-130X150X13.0B	130	130	150	150	13	14
MXP-130X150X15.0B	130	130	150	150	15	16
MXP-130X150X16.0B	130	130	150	150	16	17
MXP-130X160X17.0B	130	130	160	160	17	18
MXP-135X150X09.0B	135	135	150	150	9	10
MXP-135X150X09.0B	135	135	150	150	9	10
MXP-135X155X15.0B	135	135	155	155	15	16

Compound information available on pages 20-37.

Surface Finish: ISO 4287 & Chamfer Information on pages 7-9.
For ISO tolerance charts, refer to pages 12-13.

MFPSEALS®
www.mfpseals.com

Metric X-PAC® Loaded B-Lip - Symmetrical U-Cup

A product of MFP Seals.

PROFILE **ROD APPLICATION** **PISTON APPLICATION**

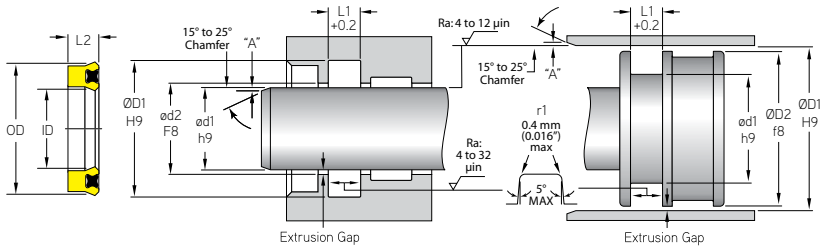

MFP PART NUMBER	ROD OR PISTON APPLICATION ød1	ød2	ØD1	ØD2	L2	L1
TOLERANCE	h9	F8	H9	f8		+0.2
MXP-136X150X09.0B	136	136	150	150	9	10
MXP-140X155X09.0B	140	140	155	155	9	10
MXP-140X155X09.0B	140	140	155	155	9	10
MXP-140X160X12.0B	140	140	160	160	12	13
MXP-140X160X13.0B	140	140	160	160	13	14
MXP-140X160X14.0B	140	140	160	160	14	15
MXP-140X160X14.5B	140	140	160	160	14.5	15.5
MXP-140X160X15.0B	140	140	160	160	15	16
MXP-140X165X18.2B	140	140	165	165	18.2	19.2
MXP-145X160X07.0B	145	145	160	160	7	8
MXP-145X160X09.0B	145	145	160	160	9	10
MXP-145X160X07.0B	145	145	160	160	7	8
MXP-145X160X09.0B	145	145	160	160	9	10
MXP-150X160X08.0B	150	150	160	160	8	9
MXP-150X165X09.0B	150	150	165	165	9	10
MXP-150X165X09.0B	150	150	165	165	9	10
MXP-150X170X15.0B	150	150	170	170	15	16
MXP-150X170X16.0B	150	150	170	170	16	17
MXP-150X180X18.0B	150	150	180	180	18	19
MXP-155X180X15.0B	155	155	180	180	15	16
MXP-155X180X16.0B	155	155	180	180	16	17
MXP-160X175X09.0B	160	160	175	175	9	10
MXP-160X180X09.5B	160	160	180	180	9.5	10.5
MXP-160X175X09.0B	160	160	175	175	9	10
MXP-160X180X15.0B	160	160	180	180	15	16
MXP-160X185X18.0B	160	160	185	185	18	19
MXP-160X190X16.0B	160	160	190	190	16	17
MXP-160X190X22.7B	160	160	190	190	22.7	23.7
MXP-165X180X09.5B	165	165	180	180	9.5	10.5
MXP-170X190X15.0B	170	170	190	190	15	16
MXP-170X195X16.0B	170	170	195	195	16	17
MXP-170X200X15.0B	170	170	200	200	15	16

Surface Finish: ISO 4287 & Chamfer Information on pages 7-9.
For ISO tolerance charts, refer to pages 12-13.

Compound information available on pages 20-37.

MXPRA - Metric X-PAC® Loaded B-Lip Rod Seal U-Cup with Twin-Lip & Anti-Extrusion Ring

A product of MFP Seals.

MFPSEALS®
www.mfpseals.com

MXPRA - METRIC X-PAC® LOADED B-LIP ROD SEAL U-CUP WITH TWIN-LIP & ANTI-EXTRUSION RING

MXPRA U-Cup is a versatile reciprocating seal for linear rod applications, up to 690 bar (10,000 psi). The rubber expander creates a compression style seal while still operating as a pressure actuated U-Cup design. The result is better low-pressure sealing and less startup leakage. The MXPRA X-PAC® offers Twin-Lip design for seal stability as well as an Anti-Extrusion Ring to prevent seal extrusion. MFP Seals' X-PAC® U-Cups feature a knife trimmed sealing lip for increased sealability.

The standard compound for this seal is U2151, with an N6014 X-Ring Expander, and M1000 Anti-Extrusion Ring. It is also available in compounds U2150, U4150, and H2155. An M1001 Anti-Extrusion Ring is also available.

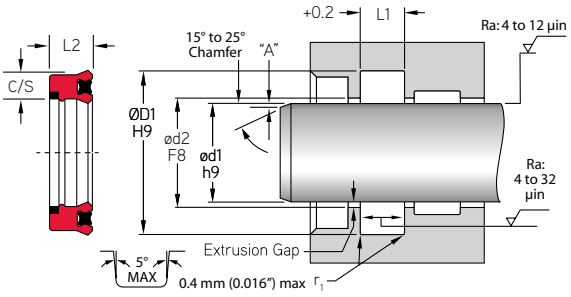

MFP PART NUMBER

MXPRA-100X115X13.0BU2151

SEAL TYPE | CROSS SECTION | ød1 | L2 | LIP STYLE | COMPOUND

Pressure: 690 bar (10,000 psi) **Max. Velocity:** 0.5 m/s (< 1.6 ft./s)

MFP PART NUMBER	ROD APPLICATION					
	ød1	ØD1	ød2	L2	C/S	L1
TOLERANCE	h9	H9	F8			+0.2
MXPRA-040X050X07.3B	40	50	40	7.3	5.0	8.3
MXPRA-045X055X07.3B	45	55	45	7.3	5.0	8.3
MXPRA-045X060X11.0B	45	60	45	11.0	7.5	12.0
MXPRA-050X060X07.3B	50	60	50	7.3	5.0	7.3
MXPRA-050X065X11.4B	50	65	50	11.4	7.5	12.4
MXPRA-060X075X11.4B	60	75	60	11.4	7.5	12.4
MXPRA-120X135X14.6B	120	135	120	14.6	7.5	15.6
MXPRA-140X160X14.5B	140	160	140	14.5	10.0	15.5

Compound information available on pages 20-37.

Surface Finish: ISO 4287 & Chamfer Information on pages 7-9.
For ISO tolerance charts, refer to pages 12-13.

MFPSEALS®
www.mfpseals.com

MPST - Metric (2 P.C.) Piston Seal

A product of MFP Seals.

MPST METRIC (2PC) PISTON SEAL

MFP Seals' MPST piston seal is made for use in light to medium duty hydraulic applications. This two piece design is composed of an O-Ring energizer and a PTFE cap produced from our proprietary T5100 compound.

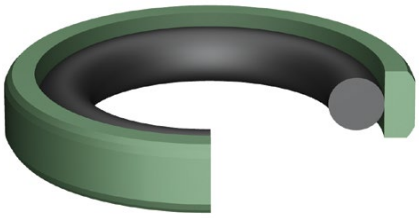

The standard compound for this seal is T5100 / N6001.

For increased chemical and temperature resistance, other compounds are available (See pages 20-37).

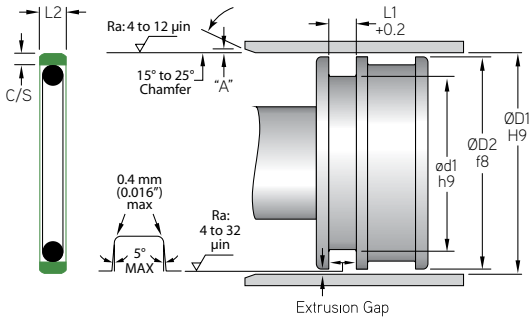

MFP PART NUMBER

MPST-016x011.0x2.2T5100N

SEAL TYPE | ØD1 | ød1 | L1 | COMPOUND | EXPANDER COMPOUND

Pressure: 400 bar (5,800 psi) **Max. Velocity:** 3.0 m/s (9 ft./s)

MFP PART NUMBER	PISTON APPLICATION ØD1	ØD2	ød1	L1
TOLERANCE	H9	f8	h9	+0.2
MPST-010X005.0X2.2	10	10	5	2.2
MPST-012X007.0X2.2	12	12	7	2.2
MPST-014X009.0X2.2	14	14	9	2.2
MPST-015X007.5X3.2	15	15	7.5	3.2
MPST-016X011.0X2.2	16	16	11	2.2
MPST-016X008.5X3.2	16	16	8.5	3.2
MPST-018X010.5X3.2	18	18	10.5	3.2
MPST-020X015.0X2.2	20	20	15	2.2
MPST-020X012.5X3.2	20	20	12.5	3.2
MPST-022X014.5X3.2	22	22	14.5	3.2
MPST-025X017.5X3.2	25	25	17.5	3.2
MPST-025X014.0X4.2	25	25	14	4.2
MPST-028X020.5X3.2	28	28	20.5	3.2
MPST-030X022.5X3.2	30	30	22.5	3.2
MPST-032X024.5X3.2	32	32	24.5	3.2
MPST-032X021.0X4.2	32	32	21	4.2
MPST-035X027.5X3.2	35	35	27.5	3.2
MPST-036X028.5X3.2	36	36	28.5	3.2
MPST-040X032.5X3.2	40	40	32.5	3.2
MPST-040X029.0X4.2	40	40	29	4.2
MPST-045X034.0X4.2	45	45	34	4.2
MPST-048X037.0X4.2	48	48	37	4.2
MPST-050X039.0X4.2	50	50	39	4.2
MPST-050X034.5X6.3	50	50	34.5	6.3
MPST-052X041.0X4.2	52	52	41	4.2

Surface Finish: ISO 4287 & Chamfer Information on pages 7-9.
For ISO tolerance charts, refer to pages 12-13.

Compound information available on pages 20-37.

MPST - Metric (2 P.C.) Piston Seal

A product of MFP Seals.

MFPSEALS®
www.mfpseals.com

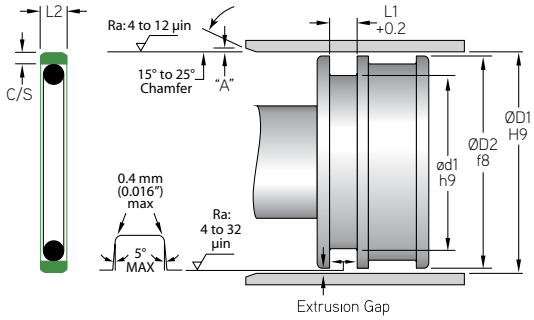

MFP PART NUMBER	PISTON APPLICATION ØD1	ØD2	ød1	L1
TOLERANCE	H9	f8	h9	+0.2
MPST-055X044.0X4.2	55	55	44	4.2
MPST-060X049.0X4.2	60	60	49	4.2
MPST-063X055.5X3.2	63	63	55.5	3.2
MPST-063X052.0X4.2	63	63	52	4.2
MPST-063X047.5X6.3	63	63	47.5	6.3
MPST-065X054.0X4.2	65	65	54	4.2
MPST-070X054.5X6.3	70	70	54.5	6.3
MPST-070X059.0X4.2	70	70	59	4.2
MPST-075X064.0X4.2	75	75	64	4.2
MPST-080X069.0X4.2	80	80	69	4.2
MPST-080X064.5X6.3	80	80	64.5	6.3
MPST-080X059.0X8.1	80	80	59	8.1
MPST-085X064.0X8.1	85	85	64	8.1
MPST-085X069.5X6.3	85	85	69.5	6.3
MPST-090X074.5X6.3	90	90	74.5	6.3
MPST-090X069.0X8.1	90	90	69	8.1
MPST-095X079.5X6.3	95	95	79.5	6.3
MPST-095X074.0X8.1	95	95	74	8.1
MPST-100X089.0X4.2	100	100	89	4.2
MPST-100X084.5X6.3	100	100	84.5	6.3
MPST-100X079.0X8.1	100	100	79	8.1
MPST-105X084.0X8.1	105	105	84	8.1
MPST-105X089.5X6.3	105	105	89.5	6.3
MPST-110X089.0X8.1	110	110	89	8.1
MPST-110X094.5X6.3	110	110	94.5	6.3
MPST-115X094.0X8.1	115	115	94	8.1
MPST-120X099.0X8.1	120	120	99	8.1
MPST-120X104.5X6.3	120	120	104.5	6.3
MPST-125X109.5X6.3	125	125	109.5	6.3
MPST-125X104.0X8.1	125	125	104	8.1
MPST-127X111.5X6.3	127	127	111.5	6.3
MPST-130X109.0X8.1	130	130	109	8.1
MPST-130X114.5X6.3	130	130	114.5	6.3
MPST-135X114.0X8.1	135	135	114	8.1
MPST-140X119.0X8.1	140	140	119	8.1
MPST-150X129.0X8.1	150	150	129	8.1
MPST-160X144.5X6.3	160	160	144.5	6.3
MPST-160X135.5X8.1	160	160	135.5	8.1

Compound information available on pages 20-37.

Surface Finish: ISO 4287 & Chamfer Information on pages 7-9.
For ISO tolerance charts, refer to pages 12-13.

MFPSEALS®
www.mfpseals.com

MPST - Metric (2 P.C.) Piston Seal

A product of MFP Seals.

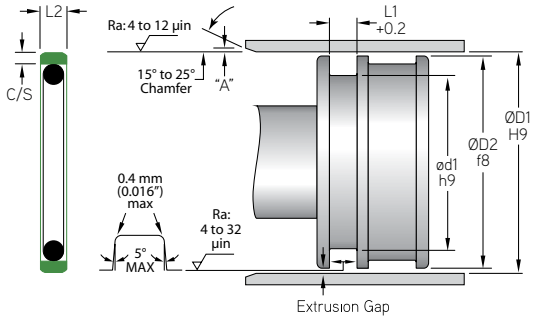

	PISTON APPLICATION			
MFP PART NUMBER	**ØD1**	**ØD2**	**ød1**	**L1**
TOLERANCE	H9	f8	h9	+0.2
MPST-160X139.0X8.1	160	160	139	8.1
MPST-170X149.0X8.1	170	170	149	8.1
MPST-180X159.0X8.1	180	180	159	8.1
MPST-190X169.0X8.1	190	190	169	8.1
MPST-200X184.5X6.3	200	200	184.5	6.3
MPST-200X175.5X8.1	200	200	175.5	8.1
MPST-200X179.0X8.1	200	200	179	8.1
MPST-210X189.0X8.1	210	210	189	8.1
MPST-220X199.0X8.1	220	220	199	8.1
MPST-225X204.0X8.1	225	225	204	8.1
MPST-230X209.0X8.1	230	230	209	8.1
MPST-240X219.0X8.1	240	240	219	8.1
MPST-250X229.0X8.1	250	250	229	8.1
MPST-260X239.0X8.1	260	260	239	8.1
MPST-280X259.0X8.1	280	280	259	8.1
MPST-300X279.0X8.1	300	300	279	8.1
MPST-320X295.5X8.1	320	320	295.5	8.1
MPST-350X325.5X8.1	350	350	325.5	8.1
MPST-360X335.5X8.1	360	360	335.5	8.1
MPST-380X355.5X8.1	380	380	355.5	8.1
MPST-400X375.5X8.1	400	400	375.5	8.1
MPST-420X395.5X8.1	420	420	395.5	8.1
MPST-450X425.5X8.1	450	450	425.5	8.1
MPST-480X455.5X8.1	480	480	455.5	8.1
MPST-500X475.5X8.1	500	500	475.5	8.1

Surface Finish: ISO 4287 & Chamfer Information on pages 7-9.
For ISO tolerance charts, refer to pages 12-13.

Compound information available on pages 20-37.

MPSP - Metric (2 P.C.) Piston Seal

A product of MFP Seals.

MFPSEALS®
www.mfpseals.com

MPSP - METRIC (2PC) PISTON SEAL

MFP Seals MPSP piston seal is designed for use in medium duty hydraulic applications. This two piece design is composed of an N6001 O-Ring expander with a Urethane cap produced from our U2151 compound the seal offers extremely low compression set and excellent extrusion resistance.

The standard compound for this seal is U2151, with an N6001 expander.

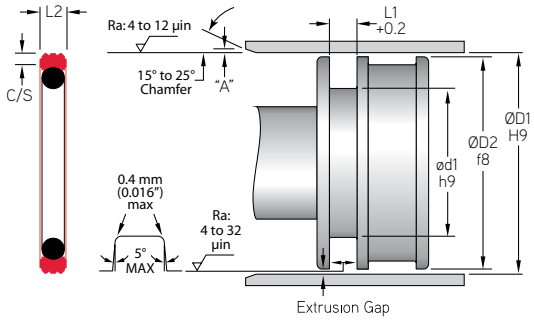

MFP PART NUMBER

MPSP-015X007.5X3.2U2151

SEAL TYPE | ØD1 | ød1 | L1 | COMPOUND

Pressure: 350 bar (5,000 psi) **Max. Velocity:** 0.1 m/s (0.3 ft./s)

MFP PART NUMBER	ROD APPLICATION ØD1	ØD2	ød1	L1
TOLERANCE	H9	f8	h9	+0.2
MPSP-015X007.5X3.2	15	15	7.5	3.2
MPSP-016X008.5X3.2	16	16	8.5	3.2
MPSP-020X012.5X3.2	20	20	12.5	3.2
MPSP-022X014.5X3.2	22	22	14.5	3.2
MPSP-025X014.0X4.2	25	25	14	4.2
MPSP-025X017.5X3.2	25	25	17.5	3.2
MPSP-028X020.5X3.2	28	28	20.5	3.2
MPSP-030X022.5X3.2	30	30	22.5	3.2
MPSP-032X021.0X4.2	32	32	21	4.2
MPSP-032X024.5X3.2	32	32	24.5	3.2
MPSP-035X027.5X3.2	35	35	27.5	3.2
MPSP-040X024.5X6.3	40	40	24.5	6.3
MPSP-040X032.5X3.2	40	40	32.5	3.2
MPSP-040X029.0X4.2	40	40	29	4.2
MPSP-045X029.5X6.3	45	45	29.5	6.3
MPSP-045X034.0X4.2	45	45	34	4.2
MPSP-048X037.0X4.2	48	48	37	4.2
MPSP-049X038.0X4.2	49	49	38	4.2
MPSP-050X034.5X6.3	50	50	34.5	6.3
MPSP-050X039.0X4.2	50	50	39	4.2
MPSP-052X036.5X6.3	52	52	36.5	6.3
MPSP-054X043.0X4.2	54	54	43	4.2
MPSP-055X039.5X6.3	55	55	39.5	6.3
MPSP-055X044.0X4.2	55	55	44	4.2
MPSP-060X044.5X6.3	60	60	44.5	6.3

Compound information available on pages 20-37.

Surface Finish: ISO 4287 & Chamfer Information on pages 7-9.
For ISO tolerance charts, refer to pages 12-13.

MFPSEALS®
www.mfpseals.com

MPSP - Metric (2 P.C.) Piston Seal

A product of MFP Seals.

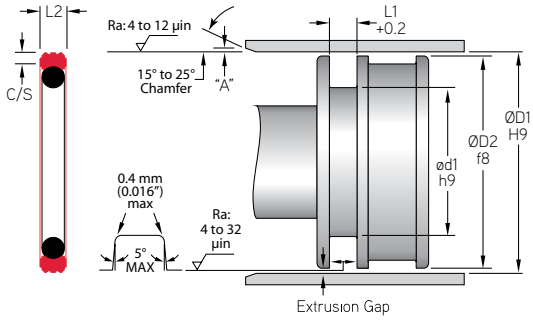

	ROD APPLICATION			
MFP PART NUMBER	**ØD1**	**ØD2**	**ød1**	**L1**
TOLERANCE	H9	f7	h9	+0.2
MPSP-060X049.0X4.2	60	60	49	4.2
MPSP-063X047.5X6.3	63	63	47.5	6.3
MPSP-063X052.0X4.2	63	63	52	4.2
MPSP-065X049.5X6.3	65	65	49.5	6.3
MPSP-065X052.0X6.3	65	65	52	6.3
MPSP-065X054.0X4.2	65	65	54	4.2
MPSP-070X054.5X6.3	70	70	54.5	6.3
MPSP-070X057.0X6.3	70	70	57	6.3
MPSP-070X059.0X4.2	70	70	59	4.2
MPSP-075X059.5X6.3	75	75	59.5	6.3
MPSP-075X064.0X4.2	75	75	64	4.2
MPSP-080X064.5X6.3	80	80	64.5	6.3
MPSP-080X069.0X4.2	80	80	69	4.2
MPSP-085X069.5X6.3	85	85	69.5	6.3
MPSP-090X074.5X6.3	90	90	74.5	6.3
MPSP-100X084.5X6.3	100	100	84.5	6.3
MPSP-105X089.5X6.3	105	105	89.5	6.3
MPSP-110X094.5X6.3	110	110	94.5	6.3
MPSP-115X099.5X6.3	115	115	99.5	6.3
MPSP-120X099.0X8.1	120	120	99	8.1
MPSP-120X104.5X6.3	120	120	104.5	6.3
MPSP-125X104.0X8.1	125	125	104	8.1
MPSP-125X109.5X6.3	125	125	109.5	6.3
MPSP-130X109.0X8.1	130	130	109	8.1
MPSP-130X114.5X6.3	130	130	114.5	6.3
MPSP-135X114.0X8.1	135	135	114	8.1
MPSP-140X119.0X8.1	140	140	119	8.1
MPSP-140X124.5X6.3	140	140	124.5	6.3
MPSP-150X129.0X8.1	150	150	129	8.1
MPSP-160X139.0X8.1	160	160	139	8.1
MPSP-165X144.0X8.1	165	165	144	8.1
MPSP-170X149.0X8.1	170	170	149	8.1
MPSP-180X159.0X8.1	180	180	159	8.1
MPSP-190X169.0X8.1	190	190	169	8.1
MPSP-200X179.0X8.1	200	200	179	8.1
MPSP-210X189.0X8.1	210	210	189	8.1
MPSP-225X204.0X8.1	225	225	204	8.1
MPSP-230X209.0X8.1	230	230	209	8.1

Surface Finish: ISO 4287 & Chamfer Information on pages 7-9.
For ISO tolerance charts, refer to pages 12-13.

Compound information available on pages 20-37.

RETURN TO INDEX

MBRS - Metric Rod Buffer Seal

A product of MFP Seals.

MFPSEALS®
www.mfpseals.com

MBRS

MBRS - METRIC ROD BUFFER SEAL

MFP Seals' MBRS is designed for use as a buffer seal or as the primary sealing element. When used as a buffer seal a primary rod seal would be designed into the groove downstream of the pressure. The MBRS seal is composed of a two piece design consisting of a filled PTFE ring along with a rubber energizer. The MBRS offers low friction and long life due to its material composition.

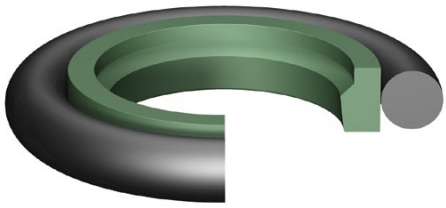

The standard compound for this seal is T5100 / N6001.

For increased chemical and temperature resistance, other compounds are available (See pages 20-37).

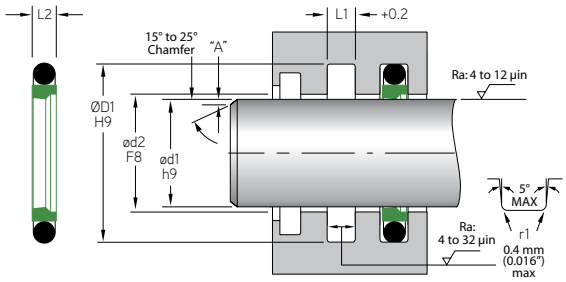

MFP PART NUMBER

MBRS006x11.0x2.2T5100N

SEAL TYPE | ød1 | ØD1 | L1 | COMPOUND | EXPANDER COMPOUND

Pressure: 350 bar (5,000 psi) **Max. Velocity:** 4.0 m/s (13 ft./s)

MFP PART NUMBER	ROD APPLICATION ød1	ød2	ØD1	L2	L1
TOLERANCE	h9	F8	H9		+0.2
MBRS-006X011.0X2.2	6	6	11	2	2.2
MBRS-008X013.0X2.2	8	8	13	2	2.2
MBRS-010X015.0X2.2	10	10	15	2	2.2
MBRS-012X017.0X2.2	12	12	17	2	2.2
MBRS-012X019.5X3.2	12	12	19.5	3	3.2
MBRS-014X019.0X2.2	14	14	19	2	2.2
MBRS-014X021.5X3.2	14	14	21.5	3	3.2
MBRS-015X030.5X6.3	15	15	30.5	5.9	6.3
MBRS-016X023.5X3.2	16	16	23.5	3	3.2
MBRS-018X025.5X3.2	18	18	25.5	3	3.2
MBRS-020X027.5X3.2	20	20	27.5	3	3.2
MBRS-020X031.0X4.2	20	20	31	4	4.2
MBRS-020X035.5X6.3	20	20	35.5	5.9	6.3
MBRS-022X029.5X3.2	22	22	29.5	3	3.2
MBRS-022X033.0X4.2	22	22	33	4	4.2
MBRS-025X032.5X3.2	25	25	32.5	3	3.2
MBRS-025X036.0X4.2	25	25	36	4	4.2
MBRS-025X040.5X6.3	25	25	40.5	5.9	6.3
MBRS-028X039.0X4.2	28	28	39	4	4.2
MBRS-030X045.5X6.3	30	30	45.5	5.9	6.3
MBRS-032X043.0X4.2	32	32	43	4	4.2
MBRS-035X050.5X6.3	35	35	50.5	5.9	6.3
MBRS-036X047.0X4.2	36	36	47	4	4.2
MBRS-040X051.0X4.2	40	40	51	4	4.2
MBRS-040X055.5X6.3	40	40	55.5	5.9	6.3
MBRS-045X056.0X4.2	45	45	56	4	4.2

Compound information available on pages 20-37.

Surface Finish: ISO 4287 & Chamfer Information on pages 7-9.
For ISO tolerance charts, refer to pages 12-13.

MFPSEALS®
www.mfpseals.com

MBRS - Metric Rod Buffer Seal

A product of MFP Seals.

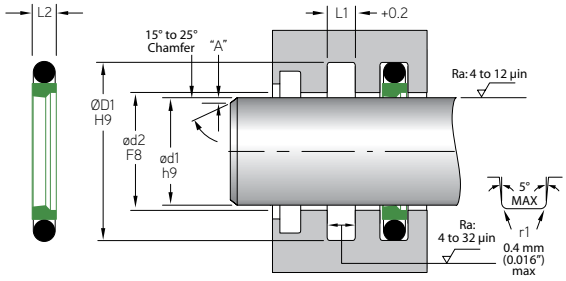

MFP PART NUMBER	ROD APPLICATION ød1	ød2	ØD1	L2	L1
TOLERANCE	h9	F8	H9		+0.2
MBRS-045X060.5X6.3	45	45	60.5	5.9	6.3
MBRS-050X061.0X4.2	50	50	61	4	4.2
MBRS-050X065.5X6.3	50	50	65.5	5.9	6.3
MBRS-055X070.5X6.3	55	55	70.5	5.9	6.3
MBRS-056X067.0X4.2	56	56	67	4	4.2
MBRS-056X071.5X6.3	56	56	71.5	5.9	6.3
MBRS-060X071.0X4.2	60	60	71	4	4.2
MBRS-060X075.5X6.3	60	60	75.5	5.9	6.3
MBRS-063X074.0X4.2	63	63	74	4	4.2
MBRS-063X078.5X6.3	63	63	78.5	5.9	6.3
MBRS-065X080.5X6.3	65	65	80.5	5.9	6.3
MBRS-070X085.5X6.3	70	70	85.5	5.9	6.3
MBRS-075X090.5X6.3	75	75	90.5	5.9	6.3
MBRS-080X095.5X6.3	80	80	95.5	5.9	6.3
MBRS-085X100.5X6.3	85	85	100.5	5.9	6.3
MBRS-090X105.5X6.3	90	90	105.5	5.9	6.3
MBRS-095X110.5X6.3	95	95	110.5	5.9	6.3
MBRS-100X115.5X6.3	100	100	115.5	5.9	6.3
MBRS-105X120.5X6.3	105	105	120.5	5.9	6.3
MBRS-110X125.5X6.3	110	110	125.5	5.9	6.3
MBRS-115X130.5X6.3	115	115	130.5	5.9	6.3
MBRS-120X135.5X6.3	120	120	135.5	5.9	6.3
MBRS-125X140.5X6.3	125	125	140.5	5.9	6.3
MBRS-130X145.5X6.3	130	130	145.5	5.9	6.3
MBRS-135X150.5X6.3	135	135	150.5	5.9	6.3
MBRS-140X155.5X6.3	140	140	155.5	5.9	6.3
MBRS-145X160.5X6.3	145	145	160.5	5.9	6.3
MBRS-150X165.5X6.3	150	150	165.5	5.9	6.3
MBRS-160X175.5X6.3	160	160	175.5	5.9	6.3
MBRS-160X181.5X8.1	160	160	181.5	7.9	8.1
MBRS-165X180.5X6.3	165	165	180.5	5.9	6.3
MBRS-180X195.5X6.3	180	180	195.5	5.9	6.3
MBRS-180X201.0X8.1	180	180	201	7.9	8.1
MBRS-200X221.0X8.1	200	200	221	7.9	8.1
MBRS-220X241.0X8.1	220	220	241	7.9	8.1
MBRS-250X271.0X8.1	250	250	271	7.9	8.1
MBRS-280X304.5X8.1	280	280	304.5	7.9	8.1
MBRS-320X344.5X8.1	320	320	344.5	7.9	8.1
MBRS-360X384.5X8.1	360	360	384.5	7.9	8.1

Surface Finish: ISO 4287 & Chamfer Information on pages 7-9.
For ISO tolerance charts, refer to pages 12-13.

Compound information available on pages 20-37.

RETURN TO INDEX

MBRU - Metric Rod Buffer Seal

A product of MFP Seals.

MFPSEALS®
www.mfpseals.com

MBRU

MBRU - Rod Buffer Seal

MFP Seals' MBRU is a compact, dual-purpose seal. Designed to be both a rod seal and a buffer seal, for the primary rod seal. The MBRU handles most of the rod sealing load while specially designed relief vents, eliminate pressure traps between the MBRU and primary rod seal. This allows fluid to bypass the MBRU, energizing the primary rod seal. Working in tandem, the MBRU and primary rod seal provide unparalleled performance in extreme applications.

This seal offers extremely low compression set and excellent extrusion resistance. Working together with the primary rod seal, the rod buffer enhances performance in extreme applications.

With M1001, Anti-Extrusion Ring (AER)

The standard compound for this seal is U2151.
It is also available in compounds U2150, U2162, U4150.

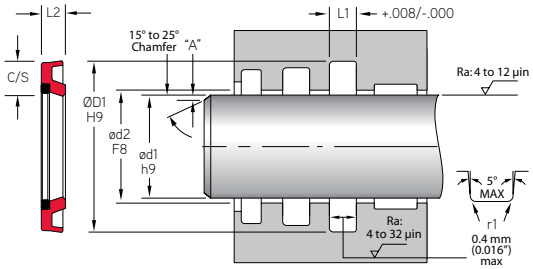

MFP PART NUMBER - AE-RING

MBRU-1250X1812X125U2151/M1001

SEAL TYPE | ød1 | ØD1 | L2 | SEAL COMPOUND | AER

Pressure: 690 bar (10,000 psi)* **Max. Velocity:** 0.5 m/s (< 1.6 ft./s)

**10,000 psi achieved with max E-gap of .005", contact MFP Engineering for E-Gap information and Gland Design Assistance. See disclaimer for BRU on page 197.*

	ROD APPLICATION				
MFP PART NUMBER	**ød1**	**ød2**	**ØD1**	**L2**	**L1**
TOLERANCE	h9	F8	H9		+0.2
MBRU-040X055.5X06.3	40	40	55.5	5.9	6.3
MBRU-045X060.5X06.3	45	45	60.5	5.9	6.3
MBRU-050X065.5X06.3	50	50	65.5	5.9	6.3
MBRU-055X070.5X06.3	55	55	70.5	5.9	6.3
MBRU-060X075.5X06.3	60	60	75.5	5.9	6.3
MBRU-063X078.5X06.3	63	63	78.5	5.9	6.3
MBRU-065X080.5X06.3	65	65	80.5	5.9	6.3
MBRU-070X085.5X06.3	70	70	85.5	5.9	6.3
MBRU-075X090.5X06.3	75	75	90.5	5.9	6.3
MBRU-080X095.5X06.3	80	80	95.5	5.9	6.3
MBRU-085X100.5X06.3	85	85	100.5	5.9	6.3
MBRU-090X105.5X06.3	90	90	105.5	5.9	6.3
MBRU-095X110.5X06.3	95	95	110.5	5.9	6.3
MBRU-100X115.5X06.3	100	100	115.5	5.9	6.3
MBRU-105X120.5X06.3	105	105	120.5	5.9	6.3
MBRU-110X125.5X06.3	110	110	125.5	5.9	6.3
MBRU-115X130.5X06.3	115	115	130.5	5.9	6.3
MBRU-120X135.5X06.3	120	120	135.5	5.9	6.3
MBRU-125X140.5X06.3	125	125	140.5	5.9	6.3
MBRU-130X145.5X06.3	130	130	145.5	5.9	6.3
MBRU-140X150.5X06.3	140	140	150.5	5.9	6.3
MBRU-150X165.5X06.3	150	150	165.5	5.9	6.3
MBRU-160X175.5X06.3	160	160	175.5	5.9	6.3
MBRU-180X201.0X08.1	180	180	201.0	7.3	8.1
MBRU-200X221.0X08.1	200	200	221.0	7.3	8.1

Compound information available on pages 20-37.

Surface Finish: ISO 4287 & Chamfer Information on pages 7-9.
For ISO tolerance charts, refer to pages 12-13.

MFP SEALS
www.mfpseals.com

MDRW - Metric Rod Wiper

A product of MFP Seals.

MDRW - METRIC ROD WIPER

MFP Seals' MDRW wipers are for use in light to medium duty hydraulic & pneumatic applications. MFP's MDRW wiper offers a slotted heel to eliminate the possibility of pressure traps between the rod seal and wiper.

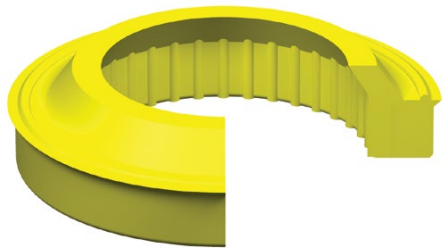

The standard compound for this seal is U2145. It is also available in compounds U2150, U2151, U4150 and H2155.

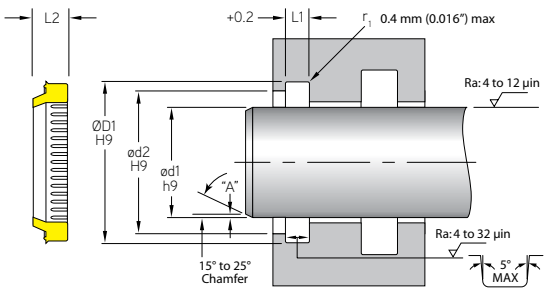

MFP PART NUMBER

MDRW-018x024.6x03.8U2145

SEAL TYPE | ød1 | ØD1 | L1 | COMPOUND

Max. Velocity: 0.5 m/s (< 1.6 ft./s)

MFP PART NUMBER	ROD APPLICATION ød1	ød2	ØD1	L1	L2
TOLERANCE	h9	H9	H9	+0.2 / -0	
MDRW-018X024.6X03.8	18	21	24.6	3.8	5.3
MDRW-025X033.6X05.3	25	28	33.6	5.3	7
MDRW-030X038.6X05.3	30	33	38.6	5.3	7
MDRW-035X043.6X05.3	35	38	43.6	5.3	7
MDRW-040X048.6X05.3	40	43	48.6	5.3	7
MDRW-045X053.6X05.3	45	48	53.6	5.3	7
MDRW-045X055.6X05.3	45	48	55.6	5.3	7
MDRW-050X058.6X05.3	50	53	58.6	5.3	7
MDRW-055X063.6X05.3	55	58	63.6	5.3	7
MDRW-060X068.6X05.3	60	63	68.6	5.3	7
MDRW-063X073.6X05.3	63	66	73.6	5.3	7
MDRW-070X078.6X05.3	70	73	78.6	5.3	7
MDRW-070X080.6X05.3	70	73	80.6	5.3	7
MDRW-075X083.6X05.3	75	78	83.6	5.3	7
MDRW-080X088.6X05.3	80	83	88.6	5.3	7
MDRW-080X092.2X07.1	80	86	92.2	7.1	12
MDRW-085X093.6X05.3	85	88	93.6	5.3	7
MDRW-090X102.2X07.1	90	96	102.2	7.1	12
MDRW-095X107.2X07.1	95	101	107.2	7.1	12
MDRW-100X112.2X07.1	100	106	112.2	7.1	12

Surface Finish: ISO 4287 & Chamfer Information on pages 7-9.
For ISO tolerance charts, refer to pages 12-13.

Compound information available on pages 20-37.

MDRW - Metric Rod Wiper

A product of MFP Seals.

MFPSEALS®
www.mfpseals.com

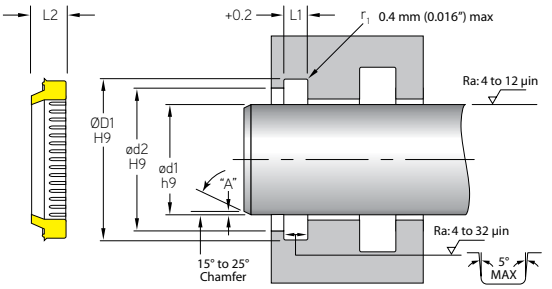

MFP PART NUMBER	ROD APPLICATION				
	ød1	ød2	ØD1	L1	L2
TOLERANCE	h9	H9	H9	+0.2 / -0	
MDRW-110X122.2X07.1	110	116	122.2	7.1	12
MDRW-115X127.2X07.1	115	121	127.2	7.1	12
MDRW-120X132.2X07.1	120	126	132.2	7.1	12
MDRW-125X137.2X07.1	125	131	137.2	7.1	12
MDRW-130X142.2X07.1	130	136	142.2	7.1	12
MDRW-135X147.2X07.1	135	141	147.2	7.1	12
MDRW-140X152.2X07.1	140	145.6	152.2	7.1	12
MDRW-145X157.2X07.1	145	151	157.2	7.1	12
MDRW-150X162.2X07.1	150	156	162.2	7.1	12

Compound information available on pages 20-37.

Surface Finish: ISO 4287 & Chamfer Information on pages 7-9.
For ISO tolerance charts, refer to pages 12-13.

MFPSEALS®
www.mfpseals.com

MHRW - Metric H Rod Wiper

A product of MFP Seals.

MHRW METRIC H ROD WIPER

MFP Seals' MHRW Rod Wipers are a one piece snap-in design for medium duty cycle applications. MFP Seals' MHRW Rod wipers are a standard in industrial cylinders with an AN or BV style U-Cup as rod seals. The MHRW Rod Wipers feature a wiper/scraper lip as well as a secondary U-Cup which serves as a extra safeguard against leakage.

The standard compound for this seal is U2145. It is also available in compounds U2150, U2151, U2162, U4150 and H2155.

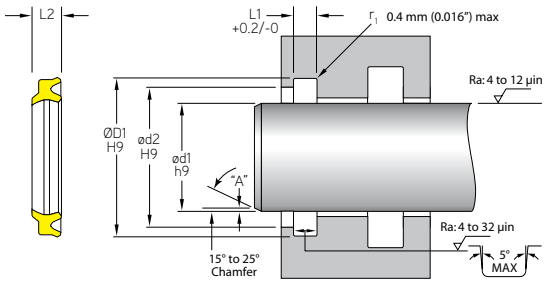

MFP PART NUMBER

MHRW-008.0x012.0x3.6U2145

SEAL TYPE | ød1 | ØD1 | L1 | COMPOUND

Max. Velocity: 0.5 m/s (< 1.6 ft./s)

MFP PART NUMBER	ROD APPLICATION ød1	ød2	ØD1	L1	L2
TOLERANCE	h9	H9	H9	+0.2/-0	
MHRW-008.0X012.0X3.6	8	10.5	12	3.6	5
MHRW-014.0X022.0X4.5	14	16.5	22	4.5	6
MHRW-016.0X022.0X4.0	16	18.5	22	4	5
MHRW-016.0X024.0X4.5	16	18.5	24	4.5	6
MHRW-018.0X026.0X4.5	18	20.5	26	4.5	6
MHRW-020.0X028.0X4.5	20	22.5	28	4.5	6
MHRW-022.4X030.4X4.5	22.4	24.9	30.4	4.5	6
MHRW-025.0X033.0X4.5	25	27.5	33	4.5	6
MHRW-028.0X036.0X4.5	28	31	36	4.5	6
MHRW-030.0X038.0X5.0	30	33	38	5	6.5
MHRW-032.0X040.0X5.0	32	35	40	5	6.5
MHRW-035.0X043.0X5.0	35	38	43	5	6.5
MHRW-035.5X043.5X5.0	35.5	38.5	43.5	5	6.5
MHRW-040.0X048.0X5.0	40	43	48	5	6.5
MHRW-045.0X053.0X5.0	45	48	53	5	6.5
MHRW-050.0X058.0X4.0	50	53	58	4	5.5
MHRW-050.0X058.0X5.0	50	53	58	5	6.5
MHRW-050.0X059.0X3.6	50	53	59	3.6	5
MHRW-055.0X063.0X5.0	55	58	63	5	6.5
MHRW-056.0X064.0X5.0	56	59	64	5	6.5
MHRW-060.0X068.0X5.0	60	63	68	5	6.5
MHRW-063.0X071.0X5.0	63	66	71	5	6.5
MHRW-065.0X073.0X5.0	65	68	73	5	6.5

Surface Finish: ISO 4287 & Chamfer Information on pages 7-9.
For ISO tolerance charts, refer to pages 12-13.

Compound information available on pages 20-37.

MHRW - Metric H Rod Wiper

A product of MFP Seals.

MFPSEALS®
www.mfpseals.com

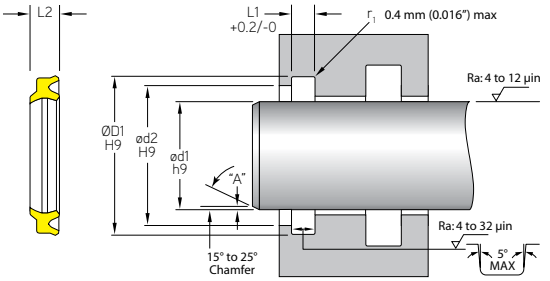

MFP PART NUMBER	ROD APPLICATION				
	ød1	ød2	ØD1	L1	L2
TOLERANCE	h9	H9	H9	+0.2/-0	
MHRW-067.0X075.0X5.0	67	70	75	5	6.5
MHRW-070.0X080.0X6.0	70	73	80	6	8
MHRW-071.0X081.0X6.0	71	74	81	6	8
MHRW-075.0X085.0X6.0	75	78	85	6	8
MHRW-080.0X090.0X6.0	80	83	90	6	8
MHRW-085.0X095.0X6.0	85	88	95	6	8
MHRW-090.0X100.0X6.0	90	93	100	6	8
MHRW-100.0X110.0X6.0	100	113	110	6	8
MHRW-112.0X122.0X6.0	112	116	122	6	8
MHRW-125.0X138.0X7.0	125	129	138	7	9.5
MHRW-140.0X153.0X7.0	140	144	153	7	9.5
MHRW-180.0X193.0X7.0	180	184	193	7	9.5

Compound information available on pages 20-37.

Surface Finish: ISO 4287 & Chamfer Information on pages 7-9.
For ISO tolerance charts, refer to pages 12-13.

MFPSEALS®
www.mfpseals.com

MOHW - Metric Rod Wiper

A product of MFP Seals.

MOHW METRIC ROD WIPER

MFP Seals' MOHW low friction wiper with integrated sealing lip is a two piece design, comprised of our T5100 filled PTFE seal and an O-Ring energizer. The MOHW Rod Wiper is designed for use in light to medium duty hydraulic cylinders and helps prevent leakage in the primary rod seal by controlling excess fluid as the rod extends. Contamination is prevented from entering the cylinder by the outer sealing edge of the seal.

The standard compound for this seal is T5100 / N6001.

For increased chemical and temperature resistance, other compounds are available (See pages 20-37).

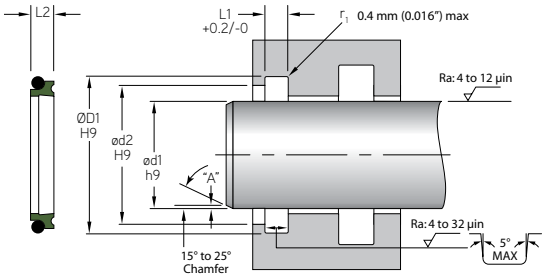

MFP PART NUMBER

MOHW-008.0x012.0x3.6T5100N

SEAL TYPE | ød1 | ØD1 | L1 | COMPOUND

Max. Velocity: 1.5 m/s (5 ft./s)

MFP PART NUMBER	ROD APPLICATION ød1	ød2	ØD1	L1
TOLERANCE	h9	H9	H9	+0.2/-0
MOHW-008X012.8X3.7	8.00	9.50	12.80	3.70
MOHW-010X014.8X3.7	10.00	11.50	14.80	3.70
MOHW-012X018.8X5.0	12.00	13.50	18.80	5.00
MOHW-014X020.8X5.0	14.00	15.50	20.80	5.00
MOHW-015X021.8X5.0	15.00	16.50	21.80	5.00
MOHW-016X022.8X5.0	16.00	17.50	22.80	5.00
MOHW-018X024.8X5.0	18.00	19.50	24.80	5.00
MOHW-020X026.8X5.0	20.00	21.50	26.80	5.00
MOHW-022X028.8X5.0	22.00	23.50	28.80	5.00
MOHW-025X031.8X5.0	25.00	26.50	31.80	5.00
MOHW-028X034.8X5.0	28.00	29.50	34.80	5.00
MOHW-030X036.8X5.0	30.00	31.50	36.80	5.00
MOHW-032X038.8X5.0	32.00	33.50	38.80	5.00
MOHW-035X041.8X5.0	35.00	36.50	41.80	5.00
MOHW-036X042.8X5.0	36.00	37.50	42.80	5.00
MOHW-040X046.8X5.0	40.00	41.50	46.80	5.00
MOHW-045X051.8X5.0	45.00	46.50	51.80	5.00
MOHW-048X054.8X5.0	48.00	49.50	54.80	5.00
MOHW-050X056.8X5.0	50.00	51.50	56.80	5.00
MOHW-052X058.8X5.0	52.00	53.50	58.80	5.00
MOHW-055X064.8X5.0	55.00	56.50	61.80	5.00
MOHW-056X62.8X5.0	56.00	57.50	62.80	5.00
MOHW-060X066.8X5.0	60.00	61.50	66.80	5.00
MOHW-063X069.8X5.0	63.00	64.50	69.80	5.00

Surface Finish: ISO 4287 & Chamfer Information on pages 7-9.
For ISO tolerance charts, refer to pages 12-13.

Compound information available on pages 20-37.

MOHW - Metric Rod Wiper

A product of MFP Seals.

MFPSEALS®
www.mfpseals.com

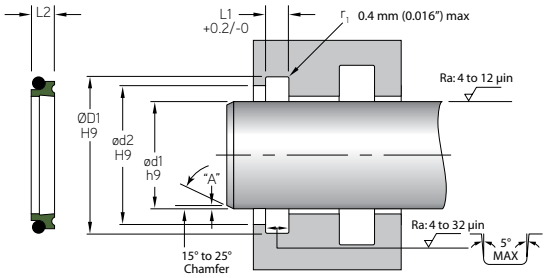

MFP PART NUMBER	ROD APPLICATION ød1	ød2	ØD1	L1
TOLERANCE	h9	H9	H9	+0.2/-0
MOHW-065X073.8X6.0	65.00	66.50	73.80	6.00
MOHW-070X078.8X6.0	70.00	71.50	78.80	6.00
MOHW-075X083.8X6.0	75.00	76.50	83.80	6.00
MOHW-080X088.8X6.0	80.00	81.50	88.80	6.00
MOHW-085X093.8X6.0	85.00	86.50	93.80	6.00
MOHW-090X098.8X6.0	90.00	91.50	98.80	6.00
MOHW-095X103.8X6.0	95.00	96.50	103.80	6.00
MOHW-100X108.8X6.0	100.00	101.50	108.80	6.00
MOHW-105X113.8X6.0	105.00	106.50	113.80	6.00
MOHW-110X118.8X6.0	110.00	111.50	118.80	6.00
MOHW-115X123.8X6.0	115.00	116.50	123.80	6.00
MOHW-120X128.8X6.0	120.00	121.50	128.80	6.00
MOHW-125X133.8X6.0	125.00	126.50	133.80	6.00
MOHW-130X138.8X6.0	130.00	131.50	138.80	6.00
MOHW-140X148.8X6.0	140.00	141.50	148.80	6.00
MOHW-150X158.8X6.0	150.00	151.50	158.80	6.00
MOHW-160X168.8X6.0	160.00	161.50	168.80	6.00
MOHW-170X178.8X6.0	170.00	171.50	178.80	6.00
MOHW-180X188.8X6.0	180.00	181.50	188.80	6.00
MOHW-190X198.8X6.0	190.00	191.50	198.80	6.00
MOHW-200X208.8X6.0	200.00	201.50	208.80	6.00
MOHW-210X218.8X6.0	210.00	211.50	218.80	6.00
MOHW-220X228.8X6.0	220.00	221.50	228.80	6.00
MOHW-240X248.8X6.0	240.00	241.50	248.80	6.00
MOHW-250X258.8X6.0	250.00	251.50	258.80	6.00
MOHW-280X292.2X8.4	280.00	282.00	292.20	8.40
MOHW-300X312.2X8.4	300.00	302.00	312.20	8.40
MOHW-320X332.2X8.4	320.00	322.00	332.20	8.40
MOHW-350X362.2X8.4	350.00	352.00	362.20	8.40
MOHW-360X372.2X8.4	360.00	362.00	372.20	8.40
MOHW-400X412.2X8.4	400.00	402.00	412.20	8.40
MOHW-420X432.2X8.4	420.00	422.00	432.20	8.40
MOHW-450X466.0X11.0	450.00	452.00	466.00	11.00
MOHW-500X516.0X11.0	500.00	502.00	516.00	11.00

Compound information available on pages 20-37.

Surface Finish: ISO 4287 & Chamfer Information on pages 7-9.
For ISO tolerance charts, refer to pages 12-13.

MFPSEALS®
www.mfpseals.com

MRCM - Metric Metal Clad Rod Wiper

A product of MFP Seals.

MRCM METRIC METAL CLAD ROD WIPER

MFP Seals' MRCM - Metric Metal Clad Rod Wipers are a heavy duty press-in wiper for tough scraping environments. A steel ring designed for press fitting is bonded to a Nitrile or Viton® wiping lip.

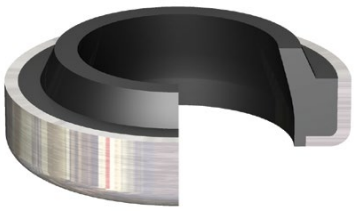

The standard compound for this seal is N6003. Other compounds are also available.

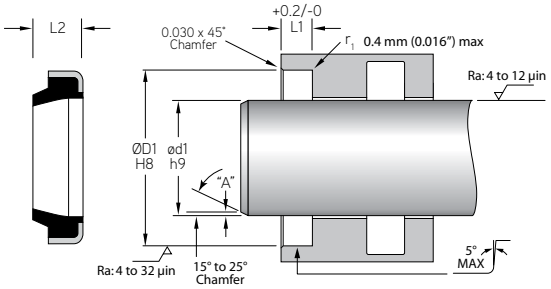

MFP PART NUMBER

MRCM-012x020.0x04.0

SEAL TYPE | ød1 | ØD1 | L1

N6003 / Steel

Max. Velocity: 0.5 m/s (< 1.6 ft./s)

MFP PART NUMBER	ROD APPLICATION ød1	ØD1	L1	L2
TOLERANCE	h9	H8	+0.2/-0	
MRCM-012X020.0X04.0	12	20	4	6
MRCM-020X028.0X03.5	20	28	3.5	5
MRCM-020X028.0X05.0	20	28	5	8
MRCM-022X032.0X05.0	22	32	5	7
MRCM-025X035.0X05.0	25	35	5	8
MRCM-025X035.0X07.0	25	35	7	10
MRCM-028X038.0X07.0	28	38	7	10
MRCM-032X042.0X07.0	32	42	7	10
MRCM-032X045.0X04.0	32	45	4	8
MRCM-032X045.0X07.0	32	45	7	10
MRCM-036X045.0X07.0	36	45	7	10
MRCM-040X050.0X05.0	40	50	5	8
MRCM-040X050.0X07.0	40	50	7	10
MRCM-040X052.0X07.0	40	52	7	10
MRCM-042X052.0X07.0	42	52	7	10
MRCM-045X055.0X07.0	45	55	7	10
MRCM-045X057.0X07.0	45	57	7	10
MRCM-050X060.0X05.0	50	60	5	7
MRCM-050X060.0X07.0	50	60	7	10
MRCM-050X065.0X05.0	50	65	5	8
MRCM-052X062.0X07.0	52	62	7	10
MRCM-056X065.0X07.0	56	65	7	10
MRCM-060X070.0X07.0	60	70	7	10

Surface Finish: ISO 4287 & Chamfer Information on pages 7-9.
For ISO tolerance charts, refer to pages 12-13.

Compound information available on pages 20-37.

MRCM - Metric Metal Clad Rod Wiper

A product of MFP Seals.

MFPSEALS®
www.mfpseals.com

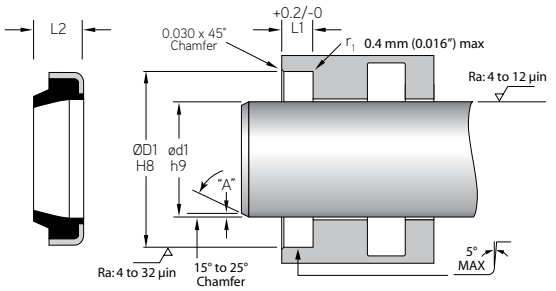

	ROD APPLICATION			
MFP PART NUMBER	**ød1**	**ØD1**	**L1**	**L2**
TOLERANCE	h9	H8	+0.2/-0	
MRCM-060X075.0X07.0	60	75	7	10
MRCM-063X073.0X07.0	63	73	7	10
MRCM-065X075.0X07.0	65	75	7	10
MRCM-067X083.0X07.0	67	83	7	10
MRCM-070X090.0X07.0	70	90	7	10
MRCM-075X085.0X07.0	75	85	7	10
MRCM-080X090.0X07.0	80	90	7	10
MRCM-090X100.0X07.0	90	100	7	10
MRCM-100X110.0X07.0	100	110	7	10
MRCM-115X125.0X07.0	115	125	7	10
MRCM-140X155.0X09.0	140	155	9	12
MRCM-180X195.0X10.0	180	195	10	14

Compound information available on pages 20-37.

Surface Finish: ISO 4287 & Chamfer Information on pages 7-9.
For ISO tolerance charts, refer to pages 12-13.

MFPSEALS®
www.mfpseals.com

MSRW - Metric Stepped Ribbed Rod Wiper

A product of MFP Seals.

MSRW - METRIC STEPPED ROD WIPER

MFP Seals MSRW rod wiper is a snap in design for light to medium duty applications. The MSRW wiper offers a slotted heel to eliminate possibilities of pressure traps between the rod seal and wiper.

The standard compound for this seal is U2145. It is also available in compounds U2150, U2151, U2162, U4150 and H2155.

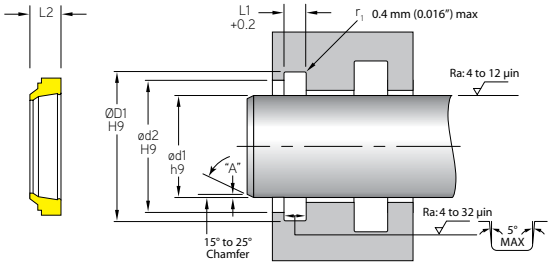

MFP PART NUMBER

MSRW-012x020x4.0U2145

SEAL TYPE | ød1 | ØD1 | L1 | COMPOUND

Max. Velocity: 0.5 m/s (< 1.6 ft./s)

MFP PART NUMBER	ROD APPLICATION ød1	ød2	ØD1	L1	L2
TOLERANCE	h9	H9	H9	+0.2/-0	
MSRW-012X020X4.0	12	18	20	4	7
MSRW-020X026X2.6	20	24	26	2.6	5
MSRW-020X028X4.0	20	26	28	4	7
MSRW-025X031X2.6	25	29	31	2.6	5
MSRW-025X033X4.0	25	31	33	4	7
MSRW-030X036X2.6	30	34	36	2.6	5
MSRW-030X038X4.0	30	36	38	4	7
MSRW-035X043X4.0	35	41	43	4	7
MSRW-035X045X4.0	35	43	45	4	7
MSRW-036X044X4.0	36	42	44	4	7
MSRW-038X046X4.0	38	44	46	4	7
MSRW-040X048X4.0	40	46	48	4	7
MSRW-045X053X4.0	45	51	53	4	7
MSRW-050X058X4.0	50	56	58	4	7
MSRW-055X063X4.0	55	61	63	4	7
MSRW-060X068X4.0	60	66	68	4	7
MSRW-065X073X4.0	65	71	73	4	7
MSRW-070X078X4.0	70	76	78	4	7
MSRW-075X083X4.0	75	81	83	4	7
MSRW-080X088X4.0	80	86	88	4	7
MSRW-085X093X4.0	85	91	93	4	7
MSRW-090X098X4.0	90	96	98	4	7
MSRW-100X108X4.0	100	106	108	4	7

Surface Finish: ISO 4287 & Chamfer Information on pages 7-9.
For ISO tolerance charts, refer to pages 12-13.

Compound information available on pages 20-37.

MSRW - Metric Stepped Ribbed Rod Wiper

A product of MFP Seals.

MFPSEALS®
www.mfpseals.com

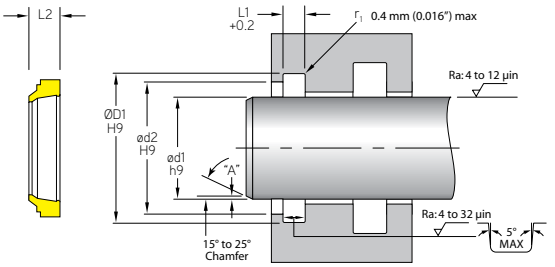

MFP PART NUMBER	ROD APPLICATION				
	ød1	ød2	ØD1	L1	L2
TOLERANCE	h9	H9	H9	+0.2/-0	
MSRW-105X113X4.0	105	111	113	4	7
MSRW-110X122X5.5	110	119	122	5.5	10
MSRW-120X132X5.5	120	129	132	5.5	10
MSRW-125X137X5.5	125	134	137	5.5	10
MSRW-140X152X5.5	140	149	152	5.5	10
MSRW-150X162X5.5	150	159	162	5.5	10
MSRW-160X172X5.5	160	169	172	5.5	10
MSRW-180X192X5.5	180	189	192	5.5	10

Compound information available on pages 20-37.

Surface Finish: ISO 4287 & Chamfer Information on pages 7-9.
For ISO tolerance charts, refer to pages 12-13.

MFPSEALS
www.mfpseals.com

A-Series, AM Metric Rod Scraper - Style-2

Medium Duty

HYDROWYPE

A-SERIES, AM METRIC ROD SCRAPER - STYLE-2

An A-Series, Style-2, metric scraper. Available in Single-piece (<30mm rod) and Multi-piece construction. Available in Copper Alloy.

Style-2 provides a scraping body with a narrow groove accommodating a 302 stainless steel serpentine form spring to generate scraping load. The spring is installed in a groove on OD of the scraper body (springs do not contact the rod).

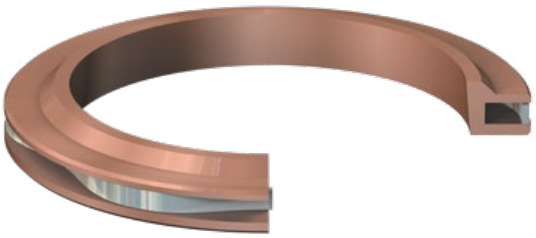

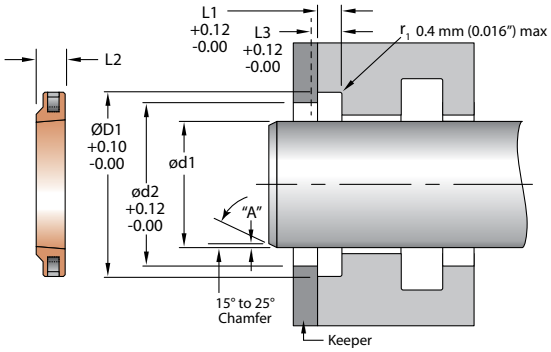

Scrapers are typically held in place by a Keeper/Follower plate or Retaining Ring.

HYDROWYPE PART NUMBER

AM-01-2B

SEAL TYPE — DASH# — STYLE — FINISH

FINISH DESIGNATION

B = UNFINISHED* (Standard) N = NICKEL
C = CADMIUM Z = ZINC

*Unfinished parts are susceptible to oxidation and should not be stored for long periods without appropriate treatment. Parts will be shipped in plastic bags with light coating of machine oil to prevent corrosion.

	ROD APPLICATION				
PART NUMBER	ød1	ØD1	ød2	L1	L3
2.67mm - GROOVE	NOMINAL	+0.10/-0.00	+0.12/-0.00	+0.12/-0.00	+0.12/-0.00
AM-16	36	43.56	40.21	2.67	3.45
AM-17	38	45.64	42.26	2.67	3.45
AM-18	40	47.45	44.16	2.67	3.45
AM-19	45	52.76	49.31	2.67	3.45
AM-20	48	55.73	52.29	2.67	3.45
AM-21	50	57.56	54.47	2.67	3.45
AM-22	55	62.81	59.59	2.67	3.45
AM-23	58	65.79	62.57	2.67	3.45
AM-24	60	67.64	64.50	2.67	3.45
AM-25	65	72.85	69.60	2.67	3.45
3.02mm - GROOVE	NOMINAL	+0.10/-0.00	+0.12/-0.00	+0.12/-0.00	+0.12/-0.00
AM-26	68	77.42	73.39	3.02	3.81
AM-27	70	79.27	75.32	3.02	3.81
AM-28	75	84.48	80.42	3.02	3.81
AM-29	78	87.45	83.41	3.02	3.81
AM-30	80	89.31	85.34	3.02	3.81
AM-31	85	94.36	90.44	3.02	3.81
AM-32	88	97.49	93.42	3.02	3.81
AM-33	90	99.36	95.36	3.02	3.81
AM-34	92	101.24	97.31	3.02	3.81
AM-35	95	104.22	100.30	3.02	3.81
AM-36	98	107.21	103.29	3.02	3.81

Surface Finish: ISO 4287 & Chamfer Information on pages 7-9.
For ISO tolerance charts, refer to pages 12-13.

Compound information available on pages 20-37.

A-Series, AM Metric Rod Scraper - Style-2

Medium Duty

MFPSEALS®
www.mfpseals.com

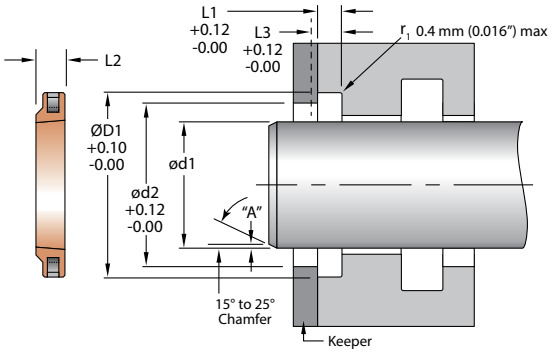

PART NUMBER	ROD APPLICATION				
	ød1	ØD1	ød2	L1	L3
3.43mm - GROOVE	NOMINAL	+0.10/-0.00	+0.12/-0.00	+0.12/-0.00	+0.12/-0.00
AM-37	100	110.69	106.02	3.43	4.22
AM-38	105	115.87	111.11	3.43	4.22
AM-39	110	121.03	116.19	3.43	4.22
AM-40	112	122.94	118.14	3.43	4.22
AM-41	115	125.91	121.13	3.43	4.22
AM-42	118	128.88	124.12	3.43	4.22
AM-43	120	130.78	126.07	3.43	4.22
AM-44	125	135.94	131.14	3.43	4.22
AM-45	128	138.94	134.14	3.43	4.22
AM-46	130	140.84	136.09	3.43	4.22
AM-47	135	145.97	141.16	3.43	4.22
AM-48	138	148.95	144.15	3.43	4.22
AM-49	140	150.88	146.11	3.43	4.22
3.84mm - GROOVE	NOMINAL	+0.10/-0.00	+0.12/-0.00	+0.12/-0.00	+0.12/-0.00
AM-50	145	157.61	151.97	3.84	4.62
AM-51	148	160.58	154.99	3.84	4.62
AM-52	150	162.48	156.91	3.84	4.62
AM-53	155	167.61	162.01	3.84	4.62
AM-54	160	172.52	166.96	3.84	4.62
AM-55	165	177.42	171.91	3.84	4.62
AM-56	170	182.32	176.86	3.84	4.62
AM-57	180	192.56	186.98	3.84	4.62
AM-58	185	197.49	191.94	3.84	4.62
AM-59	190	202.39	196.89	3.84	4.62
AM-60	195	207.31	201.85	3.84	4.62
AM-61	200	212.24	206.82	3.84	4.62
AM-62	210	222.1	216.75	3.84	4.62
AM-63	230	242.49	236.94	3.84	4.62
AM-64	240	252.35	246.88	3.84	4.62
AM-65	250	262.23	256.82	3.84	4.62
AM-66	260	272.11	266.76	3.84	4.62
AM-67	280	292.46	286.92	3.84	4.62

Compound information available on pages 20-37.

Surface Finish: ISO 4287 & Chamfer Information on pages 7-9.
For ISO tolerance charts, refer to pages 12-13.

MFPSEALS®
www.mfpseals.com

A-Series, AM Metric Rod Scraper - Style-2

Medium Duty

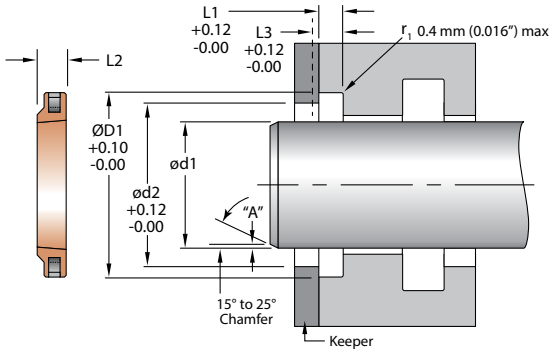

PART NUMBER	ROD APPLICATION				
	ød1	ØD1	ød2	L1	L3
4.22mm - GROOVE	NOMINAL	+0.10/-0.00	+0.12/-0.00	+0.12/-0.00	+0.12/-0.00
AM-68	290	302.34	296.87	4.22	5.00
AM-69	300	312.24	306.82	4.22	5.00
AM-70	310	322.15	316.77	4.22	5.00
AM-71	330	342.29	336.96	4.22	5.00
AM-72	340	352.35	347.15	4.22	5.00

Surface Finish: ISO 4287 & Chamfer Information on pages 7-9.
For ISO tolerance charts, refer to pages 12-13.

Compound information available on pages 20-37.

A-Series, AME Metric Rod Scraper (SS302) - Style-2

Medium Duty

MFPSEALS
www.mfpseals.com

HYDROWYPE

A-SERIES, AME METRIC ROD SCRAPER (SS302) - STYLE-2

An A-Series, Style-2, metric scraper. Available in Single-piece (<30mm rod) and Multi-piece construction. Available in 300 Series Stainless Steel.

Style-2 provides a scraping body with a narrow groove accommodating a 302 stainless steel serpentine form spring to generate scraping load. The spring is installed in a groove on OD of the scraper body (springs do not contact the rod).

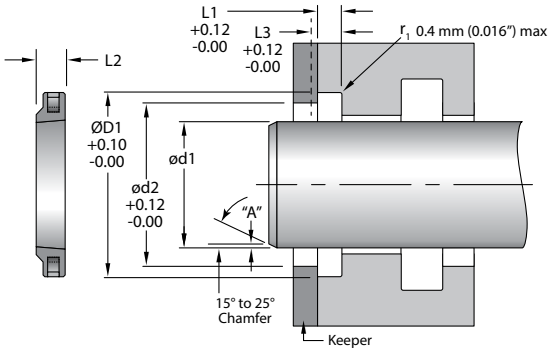

Scrapers are typically held in place by a Keeper/Follower plate or Retaining Ring.

Max. Velocity: 0.5 m/s (1.64 ft./s)**

HYDROWYPE PART NUMBER

AME-16-2B

SEAL TYPE — DASH# — STYLE — FINISH

FINISH DESIGNATION

B = UNFINISHED* (Standard) T = TiCN

*Unfinished parts are susceptible to oxidation and should not be stored for long periods without appropriate treatment. Parts will be shipped in plastic bags with light coating of machine oil to prevent corrosion.

**Based on tests conducted with very specific "dry rod" conditions, intended to represent a worst-case scenario.

	ROD APPLICATION				
PART NUMBER	ød1	ØD1	ød2	L1	L3
2.67mm - GROOVE	NOMINAL	+0.10/-0.00	+0.12/-0.00	+0.12/-0.00	+0.12/-0.00
AME-16	36	43.56	40.21	2.67	3.45
AME-17	38	45.64	42.26	2.67	3.45
AME-18	40	47.45	44.16	2.67	3.45
AME-19	45	52.76	49.31	2.67	3.45
AME-20	48	55.73	52.29	2.67	3.45
AME-21	50	57.56	54.47	2.67	3.45
AME-22	55	62.81	59.59	2.67	3.45
AME-23	58	65.79	62.57	2.67	3.45
AME-24	60	67.64	64.50	2.67	3.45
AME-25	65	72.85	69.60	2.67	3.45
3.02mm - GROOVE	NOMINAL	+0.10/-0.00	+0.12/-0.00	+0.12/-0.00	+0.12/-0.00
AME-26	68	77.42	73.39	3.02	3.81
AME-27	70	79.27	75.32	3.02	3.81
AME-28	75	84.48	80.42	3.02	3.81
AME-29	78	87.45	83.41	3.02	3.81
AME-30	80	89.31	85.34	3.02	3.81
AME-31	85	94.36	90.44	3.02	3.81
AME-32	88	97.49	93.42	3.02	3.81
AME-33	90	99.36	95.36	3.02	3.81
AME-34	92	101.24	97.31	3.02	3.81
AME-35	95	104.22	100.30	3.02	3.81
AME-36	98	107.21	103.29	3.02	3.81

Compound information available on pages 20-37.

Surface Finish: ISO 4287 & Chamfer Information on pages 7-9.
For ISO tolerance charts, refer to pages 12-13.

MFPSEALS®
www.mfpseals.com

A-Series, AME Metric Rod Scraper (SS302) - Style-2

Medium Duty

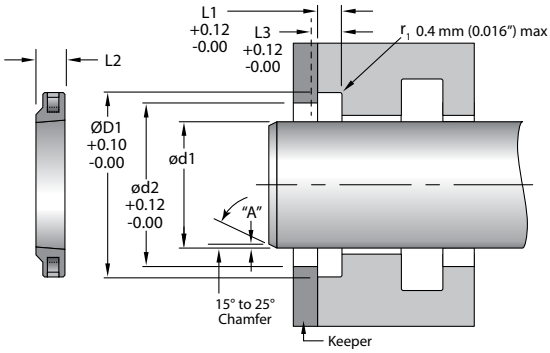

PART NUMBER	ROD APPLICATION				
	ød1	ØD1	ød2	L1	L3
3.43mm - GROOVE	NOMINAL	+0.10/-0.00	+0.12/-0.00	+0.12/-0.00	+0.12/-0.00
AME-37	100	110.69	106.02	3.43	4.22
AME-38	105	115.87	111.11	3.43	4.22
AME-39	110	121.03	116.19	3.43	4.22
AME-40	112	122.94	118.14	3.43	4.22
AME-41	115	125.91	121.13	3.43	4.22
AME-42	118	128.88	124.12	3.43	4.22
AME-43	120	130.78	126.07	3.43	4.22
AME-44	125	135.94	131.14	3.43	4.22
AME-45	128	138.94	134.14	3.43	4.22
AME-46	130	140.84	136.09	3.43	4.22
AME-47	135	145.97	141.16	3.43	4.22
AME-48	138	148.95	144.15	3.43	4.22
AME-49	140	150.88	146.11	3.43	4.22
3.84mm - GROOVE	NOMINAL	+0.10/-0.00	+0.12/-0.00	+0.12/-0.00	+0.12/-0.00
AME-50	145	157.61	151.97	3.84	4.62
AME-51	148	160.58	154.99	3.84	4.62
AME-52	150	162.48	156.91	3.84	4.62
AME-53	155	167.61	162.01	3.84	4.62
AME-54	160	172.52	166.96	3.84	4.62
AME-55	165	177.42	171.91	3.84	4.62
AME-56	170	182.32	176.86	3.84	4.62
AME-57	180	192.56	186.98	3.84	4.62
AME-58	185	197.49	191.94	3.84	4.62
AME-59	190	202.39	196.89	3.84	4.62
AME-60	195	207.31	201.85	3.84	4.62
AME-61	200	212.24	206.82	3.84	4.62
AME-62	210	222.1	216.75	3.84	4.62
AME-63	230	242.49	236.94	3.84	4.62
AME-64	240	252.35	246.88	3.84	4.62
AME-65	250	262.23	256.82	3.84	4.62
AME-66	260	272.11	266.76	3.84	4.62
AME-67	280	292.46	286.92	3.84	4.62

Surface Finish: ISO 4287 & Chamfer Information on pages 7-9.
For ISO tolerance charts, refer to pages 12-13.

Compound information available on pages 20-37.

A-Series, AME Metric Rod Scraper (SS302) - Style-2

Medium Duty

MFPSEALS®
www.mfpseals.com

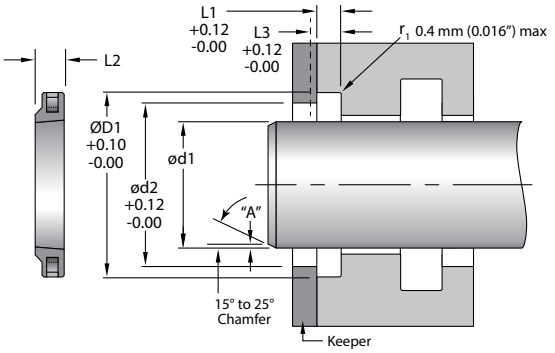

PART NUMBER	ROD APPLICATION				
	ød1	ØD1	ød2	L1	L3
4.22mm - GROOVE	NOMINAL	+0.10/-0.00	+0.12/-0.00	+0.12/-0.00	+0.12/-0.00
AME-68	290	302.34	296.87	4.22	5.00
AME-69	300	312.24	306.82	4.22	5.00
AME-70	310	322.15	316.77	4.22	5.00
AME-71	330	342.29	336.96	4.22	5.00
AME-72	340	352.35	347.15	4.22	5.00

Compound information available on pages 20-37.

Surface Finish: ISO 4287 & Chamfer Information on pages 7-9.
For ISO tolerance charts, refer to pages 12-13.

MFPSEALS
www.mfpseals.com

D-Series, DMRH - Heavy Duty Metric Rod Scrapers

Heavy Duty

HYDROWYPE

SERIES-D, DMRH - HEAVY DUTY METRIC ROD SCRAPER

The metric DMRH is a Heavy-Duty rod scraper utilizing both an o-ring and serpentine spring. DMRH scrapers are typically recommended for new applications. All D-series scrapers are designed to be installed using a (keeper plate) or retaining ring, but can be configured in an installation vessel to permit press-in installation. The robust body of the DMRH allows for the use of a heavier, high-load serpentine spring which generates more clamping power to resist the over-ride of strongly bonded contaminants. It also has an O-ring that protrudes 0.5mm beyond the OD of the scraper body to seal against the housing groove in the gland and prevent outer-ingression. This design results in the highest performing metric rod scraper.

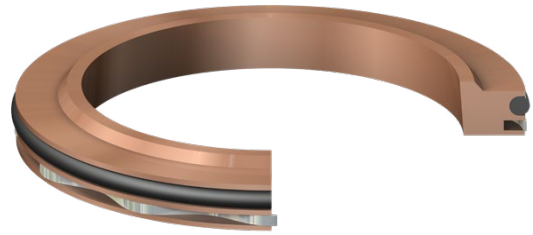

Available materials based on style. Contact MFP Seals for detailed information.

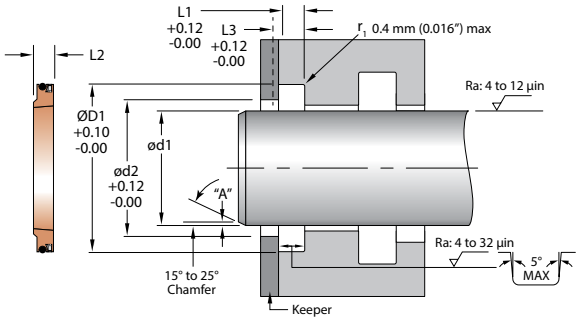

Scrapers are typically held in place by a Keeper/Follower plate or Retaining Ring.

HYDROWYPE PART NUMBER

DMRH-01C/N6001

SEAL TYPE — DASH# — FINISH — O-RING COMPOUND**

FINISH DESIGNATION

B = UNFINISHED* (Standard) N = NICKEL
C = CADMIUM Z = ZINC

*Unfinished parts are susceptible to oxidation and should not be stored for long periods without appropriate treatment. Parts will be shipped in plastic bags with light coating of machine oil to prevent corrosion.

**For a list of available elastomeric compounds for o-rings, please refer to page 45 & 46.

Contact your MFP Seals Sales Representative for available sizes.

MSS - Metric Swivel Seal

A product of MFP Seals.

MFPSEALS®
www.mfpseals.com

MSS - METRIC SWIVEL SEAL

MFP Seals' MSS is a rotary seal designed for use in hydraulic swivels. Produced from our U2151 compound, the seal offers extremely low compression set and excellent extrusion resistance.

The standard compound for this seal is U2151. Other compounds are also available.

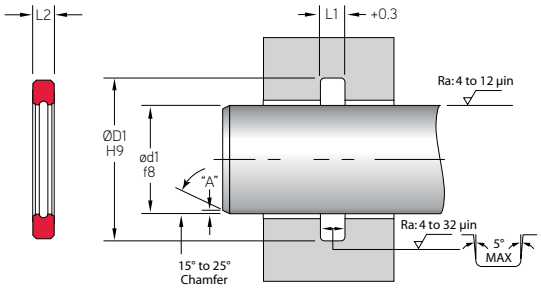

MFP PART NUMBER

MSS-080x090x05U2151

SEAL TYPE | ød1 | ØD1 | L1 | COMPOUND

Pressure: 350 bar (5,000 psi) **Max. Velocity:** 0.1 m/s (0.3 ft./s)

MFP PART NUMBER	ROD APPLICATION ød1	ØD1	L1
TOLERANCE	f8	H9	+0.3
MSS-070X080X05	70	80	5
MSS-075X085X05	75	85	5
MSS-080X090X05	80	90	5
MSS-090X100X05	90	100	5
MSS-100X110X05	100	110	5
MSS-125X135.4X05	125	135.4	5

Compound information available on pages 20-37.

Surface Finish: ISO 4287 & Chamfer Information on pages 7-9.
For ISO tolerance charts, refer to pages 12-13.

MFP SEALS
www.mfpseals.com

MPWS - Metric Composite Wear Strip - C4000

A product of MFP Seals.

MPWS - C4000 TIGHT TOLERANCE COMPOSITE WEAR STRIP

MFP Seals' proprietary Tight Tolerance C4000 Composite Wear Strip is designed to eliminate scoring in hydraulic and pneumatic applications by preventing metal to metal contact.

See page 6 for guide ring cutting instructions.

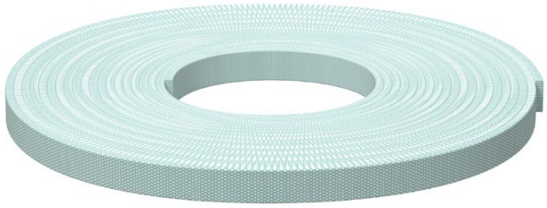

MFP PART NUMBER

MPWS-2.0x05.5C4000-RL

SEAL TYPE | C/S | L1 | COMPOUND | ROLL

PROFILE

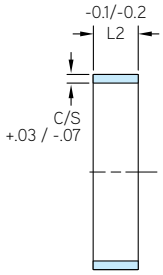

ROD APPLICATION

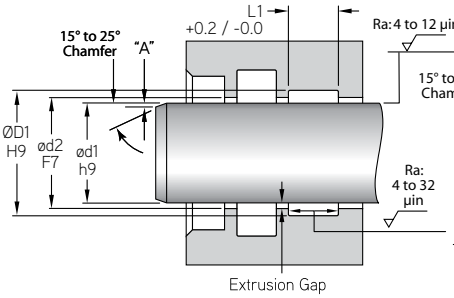

PISTON APPLICATION

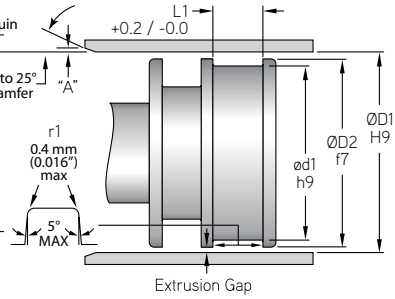

MFP PART NUMBER	ROD OR PISTON APPLICATION C/S	L1	L2	ROLL LENGTH
TOLERANCE	+.03/-.07	+0.2/-0.0	-0.1/-0.2	
MPWS-2.0X05.6	2.0	5.6	5.6	10 Meters
MPWS-2.0X09.7	2.0	9.7	9.7	10 Meters
MPWS-2.0X12.0	2.0	12.0	12.0	10 Meters
MPWS-2.0X15.0	2.0	15.0	15.0	10 Meters
MPWS-2.0X20.0	2.0	20.0	20.0	10 Meters
MPWS-2.0X25.0	2.0	25.0	25.0	10 Meters
MPWS-2.0X30.0	2.0	30.0	30.0	10 Meters
MPWS-2.0X35.0	2.0	35.0	35.0	10 Meters
MPWS-2.0X40.0	2.0	40.0	40.0	10 Meters
MPWS-2.0X50.0	2.0	50.0	50.0	10 Meters
MPWS-2.5X05.6	2.5	5.6	5.6	10 Meters
MPWS-2.5X09.7	2.5	9.7	9.7	10 Meters
MPWS-2.5X12.0	2.5	12.0	12.0	10 Meters
MPWS-2.5X15.0	2.5	15.0	15.0	10 Meters
MPWS-2.5X20.0	2.5	20.0	20.0	10 Meters
MPWS-2.5X25.0	2.5	25.0	25.0	10 Meters
MPWS-2.5X30.0	2.5	30.0	30.0	10 Meters
MPWS-2.5X35.0	2.5	35.0	35.0	10 Meters
MPWS-2.5X40.0	2.5	40.0	40.0	10 Meters
MPWS-2.5X50.0	2.5	50.0	50.0	10 Meters
MPWS-3.0X05.6	3.0	5.6	5.6	10 Meters
MPWS-3.0X09.7	3.0	9.7	9.7	10 Meters
MPWS-3.0X12.0	3.0	12.0	12.0	10 Meters

Surface Finish: ISO 4287 & Chamfer Information on pages 7-9.
For ISO tolerance charts, refer to pages 12-13.

Compound information available on pages 20-37.

MPWS - Metric Composite Wear Strip - C4000

A product of MFP Seals.

MFPSEALS®
www.mfpseals.com

PROFILE

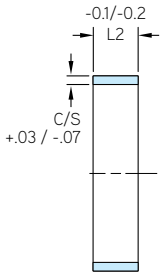

ROD APPLICATION

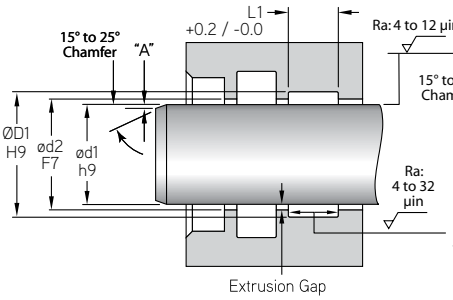

PISTON APPLICATION

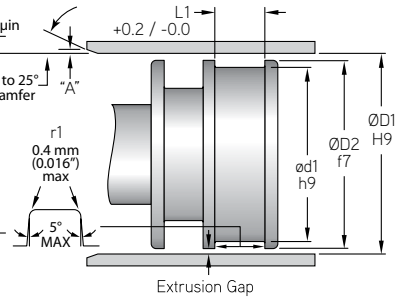

MFP PART NUMBER	ROD OR PISTON APPLICATION C/S	L1	L2	ROLL LENGTH
TOLERANCE	+.03/-.07	+0.2/-0.0	-0.1/-0.2	
MPWS-3.0X15.0	3.0	15.0	15.0	10 Meters
MPWS-3.0X20.0	3.0	20.0	20.0	10 Meters
MPWS-3.0X25.0	3.0	25.0	25.0	10 Meters
MPWS-3.0X30.0	3.0	30.0	30.0	10 Meters
MPWS-3.0X35.0	3.0	35.0	35.0	10 Meters
MPWS-3.0X40.0	3.0	40.0	40.0	10 Meters
MPWS-3.0X50.0	3.0	50.0	50.0	10 Meters
MPWS-3.5X05.6	3.5	5.6	5.6	10 Meters
MPWS-3.5X09.7	3.5	9.7	9.7	10 Meters
MPWS-3.5X12.0	3.5	12.0	12.0	10 Meters
MPWS-3.5X15.0	3.5	15.0	15.0	10 Meters
MPWS-3.5X20.0	3.5	20.0	20.0	10 Meters
MPWS-3.5X25.0	3.5	25.0	25.0	10 Meters
MPWS-3.5X30.0	3.5	30.0	30.0	10 Meters
MPWS-3.5X35.0	3.5	35.0	35.0	10 Meters
MPWS-3.5X40.0	3.5	40.0	40.0	10 Meters
MPWS-3.5X50.0	3.5	50.0	50.0	10 Meters
MPWS-4.0X05.6	4.0	5.6	5.6	10 Meters
MPWS-4.0X09.7	4.0	9.7	9.7	10 Meters
MPWS-4.0X12.0	4.0	12.0	12.0	10 Meters
MPWS-4.0X15.0	4.0	15.0	15.0	10 Meters
MPWS-4.0X20.0	4.0	20.0	20.0	10 Meters
MPWS-4.0X25.0	4.0	25.0	25.0	10 Meters
MPWS-4.0X30.0	4.0	30.0	30.0	10 Meters
MPWS-4.0X35.0	4.0	35.0	35.0	10 Meters
MPWS-4.0X40.0	4.0	40.0	40.0	10 Meters
MPWS-4.0X50.0	4.0	50.0	50.0	10 Meters
MPWS-5.0X05.6	5.0	5.6	5.6	10 Meters
MPWS-5.0X09.7	5.0	9.7	9.7	10 Meters
MPWS-5.0X12.0	5.0	12.0	12.0	10 Meters
MPWS-5.0X15.0	5.0	15.0	15.0	10 Meters
MPWS-5.0X20.0	5.0	20.0	20.0	10 Meters
MPWS-5.0X25.0	5.0	25.0	25.0	10 Meters
MPWS-5.0X30.0	5.0	30.0	30.0	10 Meters
MPWS-5.0X35.0	5.0	35.0	35.0	10 Meters
MPWS-5.0X40.0	5.0	40.0	40.0	10 Meters
MPWS-5.0X50.0	5.0	50.0	50.0	10 Meters

Compound information available on pages 20-37.

Surface Finish: ISO 4287 & Chamfer Information on pages 7-9.
For ISO tolerance charts, refer to pages 12-13.

MFPSEALS®
www.mfpseals.com

MTWS - Metric PTFE Wear Strip - T5100

A product of MFP Seals.

MTWS - TIGHT TOLERANCE T5100 PTFE WEAR STRIP

MFP Seals' proprietary Tight Tolerance T5100 PTFE Wear Strip is designed to eliminate scoring in hydraulic and pneumatic applications by preventing metal to metal contact. Sold by the roll, our T5100 compound wear strip provides excellent light-duty, low friction performance.

See page 6 for guide ring cutting instructions.

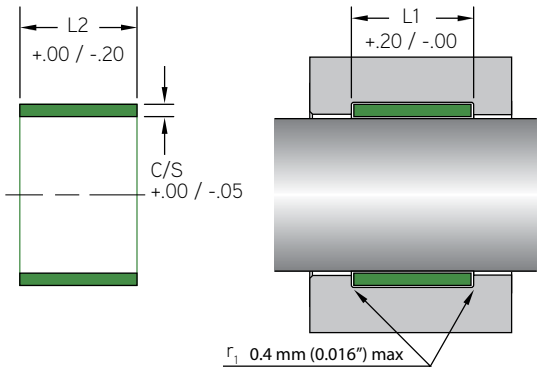

MFP PART NUMBER

MTWS3.0x05.4T5100-RL

SEAL TYPE | C/S | L2 | COMPOUND | ROLL

MFP PART NUMBER	ROD OR PISTON APPLICATION C/S	L1	L2	ROLL LENGTH
TOLERANCE	+.00/-.05	+.20/-.00	+.00/-.20	
MTWS-1.5X03.0T5100-RL	1.5	3.2	3	115 FT
MTWS-1.5X03.8T5100-RL	1.5	4	3.8	115 FT
MTWS-1.5X05.4T5100-RL	1.5	5.6	5.4	115 FT
MTWS-1.5X05.6T5100-RL	1.5	5.8	5.6	115 FT
MTWS-1.5X06.0T5100-RL	1.5	6.2	6	115 FT
MTWS-1.5X06.1T5100-RL	1.5	6.3	6.1	115 FT
MTWS-1.5X07.9T5100-RL	1.5	8.1	7.9	115 FT
MTWS-1.5X08.0T5100-RL	1.5	8.2	8	115 FT
MTWS-1.5X09.5T5100-RL	1.5	9.7	9.5	115 FT
MTWS-1.5X09.7T5100-RL	1.5	9.9	9.7	115 FT
MTWS-1.5X10.0T5100-RL	1.5	10.2	10	115 FT
MTWS-1.5X11.8T5100-RL	1.5	12	11.8	115 FT
MTWS-1.5X12.8T5100-RL	1.5	13	12.8	115 FT
MTWS-1.5X13.0T5100-RL	1.5	13.2	13	115 FT
MTWS-1.5X13.8T5100-RL	1.5	14	13.8	115 FT
MTWS-1.5X14.0T5100-RL	1.5	14.2	14	115 FT
MTWS-1.5X14.8T5100-RL	1.5	15	14.8	115 FT
MTWS-1.5X15.0T5100-RL	1.5	15.2	15	115 FT
MTWS-1.5X19.8T5100-RL	1.5	20	19.8	115 FT
MTWS-1.5X20.0T5100-RL	1.5	20.2	20	115 FT
MTWS-1.5X24.8T5100-RL	1.5	25	24.8	115 FT
MTWS-1.5X25.0T5100-RL	1.5	25.2	25	115 FT
MTWS-1.5X34.8T5100-RL	1.5	35	34.8	115 FT
MTWS-1.5X49.8T5100-RL	1.5	50	49.8	115 FT
MTWS-2.0X03.8T5100-RL	2	4	3.8	82 FT
MTWS-2.0X05.4T5100-RL	2	5.6	5.4	82 FT

Surface Finish: ISO 4287 & Chamfer Information on pages 7-9.
For ISO tolerance charts, refer to pages 12-13.

Compound information available on pages 20-37.

MTWS - Metric PTFE Wear Strip - T5100

A product of MFP Seals.

MFPSEALS®
www.mfpseals.com

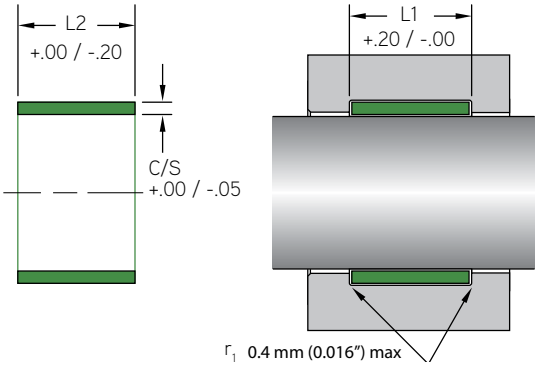

MFP PART NUMBER	ROD OR PISTON APPLICATION C/S	L1	L2	ROLL LENGTH
TOLERANCE	+.00/-.05	+.20/-.00	+.00/-.20	
MTWS-2.0X05.6T5100-RL	2	5.8	5.6	82 FT
MTWS-2.0X06.0T5100-RL	2	6.2	6	82 FT
MTWS-2.0X06.1T5100-RL	2	6.3	6.1	82 FT
MTWS-2.0X07.9T5100-RL	2	8.1	7.9	82 FT
MTWS-2.0X08.0T5100-RL	2	8.2	8	82 FT
MTWS-2.0X09.5T5100-RL	2	9.7	9.5	82 FT
MTWS-2.0X09.7T5100-RL	2	9.9	9.7	82 FT
MTWS-2.0X10.0T5100-RL	2	10.2	10	82 FT
MTWS-2.0X11.8T5100-RL	2	12	11.8	82 FT
MTWS-2.0X12.8T5100-RL	2	13	12.8	82 FT
MTWS-2.0X13.0T5100-RL	2	13.2	13	82 FT
MTWS-2.0X13.8T5100-RL	2	14	13.8	82 FT
MTWS-2.0X14.0T5100-RL	2	14.2	14	82 FT
MTWS-2.0X14.8T5100-RL	2	15	14.8	82 FT
MTWS-2.0X15.0T5100-RL	2	15.2	15	82 FT
MTWS-2.0X19.8T5100-RL	2	20	19.8	82 FT
MTWS-2.0X20.0T5100-RL	2	20.2	20	82 FT
MTWS-2.0X24.8T5100-RL	2	25	24.8	82 FT
MTWS-2.0X25.0T5100-RL	2	25.2	25	82 FT
MTWS-2.0X34.8T5100-RL	2	35	34.8	82 FT
MTWS-2.0X49.8T5100-RL	2	50	49.8	82 FT
MTWS-2.5X03.8T5100-RL	2.5	4	3.8	66 FT
MTWS-2.5X05.4T5100-RL	2.5	5.6	5.4	66 FT
MTWS-2.5X05.6T5100-RL	2.5	5.8	5.6	66 FT
MTWS-2.5X06.0T5100-RL	2.5	6.2	6	66 FT
MTWS-2.5X06.1T5100-RL	2.5	6.3	6.1	66 FT
MTWS-2.5X07.9T5100-RL	2.5	8.1	7.9	66 FT
MTWS-2.5X08.0T5100-RL	2.5	8.2	8	66 FT
MTWS-2.5X09.5T5100-RL	2.5	9.7	9.5	66 FT
MTWS-2.5X09.7T5100-RL	2.5	9.9	9.7	66 FT
MTWS-2.5X10.0T5100-RL	2.5	10.2	10	66 FT
MTWS-2.5X11.8T5100-RL	2.5	12	11.8	66 FT
MTWS-2.5X12.8T5100-RL	2.5	13	12.8	66 FT
MTWS-2.5X13.0T5100-RL	2.5	13.2	13	66 FT
MTWS-2.5X13.8T5100-RL	2.5	14	13.8	66 FT
MTWS-2.5X14.0T5100-RL	2.5	14.2	14	66 FT
MTWS-2.5X14.8T5100-RL	2.5	15	14.8	66 FT
MTWS-2.5X15.0T5100-RL	2.5	15.2	15	66 FT

Compound information available on pages 20-37.

Surface Finish: ISO 4287 & Chamfer Information on pages 7-9.
For ISO tolerance charts, refer to pages 12-13.

MFPSEALS®
www.mfpseals.com

MTWS - Metric PTFE Wear Strip - T5100

A product of MFP Seals.

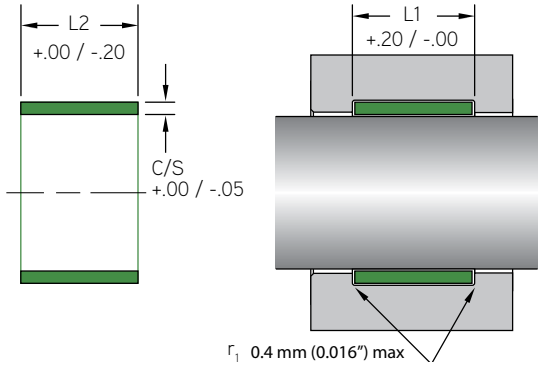

MFP PART NUMBER	ROD OR PISTON APPLICATION C/S	L1	L2	ROLL LENGTH
TOLERANCE	+.00/-.05	+.20/-.00	+.00/-.20	
MTWS-2.5X19.8T5100-RL	2.5	20	19.8	66 FT
MTWS-2.5X20.0T5100-RL	2.5	20.2	20	66 FT
MTWS-2.5X24.8T5100-RL	2.5	25	24.8	66 FT
MTWS-2.5X25.0T5100-RL	2.5	25.2	25	66 FT
MTWS-2.5X34.8T5100-RL	2.5	35	34.8	66 FT
MTWS-2.5X49.8T5100-RL	2.5	50	49.8	66 FT
MTWS3.0X05.4T5100-RL	3	5.6	5.4	53 FT
MTWS3.0X05.6T5100-RL	3	5.8	5.6	53 FT
MTWS3.0X06.0T5100-RL	3	6.2	6	53 FT
MTWS3.0X06.1T5100-RL	3	6.3	6.1	53 FT
MTWS3.0X07.9T5100-RL	3	8.1	7.9	53 FT
MTWS3.0X08.0T5100-RL	3	8.2	8	53 FT
MTWS3.0X09.5T5100-RL	3	9.7	9.5	53 FT
MTWS3.0X09.7T5100-RL	3	9.9	9.7	53 FT
MTWS3.0X10.0T5100-RL	3	10.2	10	53 FT
MTWS3.0X11.8T5100-RL	3	12	11.8	53 FT
MTWS3.0X12.8T5100-RL	3	13	12.8	53 FT
MTWS3.0X13.0T5100-RL	3	13.2	13	53 FT
MTWS3.0X13.8T5100-RL	3	14	13.8	53 FT
MTWS3.0X14.0T5100-RL	3	14.2	14	53 FT
MTWS3.0X14.8T5100-RL	3	15	14.8	53 FT
MTWS3.0X15.0T5100-RL	3	15.2	15	53 FT
MTWS3.0X19.8T5100-RL	3	20	19.8	53 FT
MTWS3.0X20.0T5100-RL	3	20.2	20	53 FT
MTWS3.0X24.8T5100-RL	3	25	24.8	53 FT
MTWS3.0X25.0T5100-RL	3	25.2	25	53 FT
MTWS3.0X34.8T5100-RL	3	35	34.8	53 FT
MTWS3.0X49.8T5100-RL	3	50	49.8	53 FT
MTWS-3.5X05.4T5100-RL	3.5	5.6	5.4	92 FT
MTWS-3.5X05.6T5100-RL	3.5	5.8	5.6	92 FT
MTWS-3.5X06.0T5100-RL	3.5	6.2	6	92 FT
MTWS-3.5X06.1T5100-RL	3.5	6.3	6.1	92 FT
MTWS-3.5X07.9T5100-RL	3.5	8.1	7.9	92 FT
MTWS-3.5X08.0T5100-RL	3.5	8.2	8	92 FT
MTWS-3.5X09.5T5100-RL	3.5	9.7	9.5	92 FT
MTWS-3.5X09.7T5100-RL	3.5	9.9	9.7	92 FT
MTWS-3.5X10.0T5100-RL	3.5	10.2	10	92 FT
MTWS-3.5X11.8T5100-RL	3.5	12	11.8	92 FT

Surface Finish: ISO 4287 & Chamfer Information on pages 7-9.
For ISO tolerance charts, refer to pages 12-13.

Compound information available on pages 20-37.

MTWS - Metric PTFE Wear Strip - T5100

A product of MFP Seals.

MFPSEALS®
www.mfpseals.com

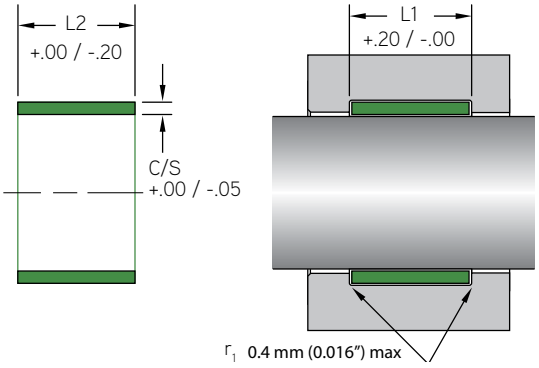

MFP PART NUMBER	C/S	L1	L2	ROLL LENGTH
	ROD OR PISTON APPLICATION			
TOLERANCE	+.00/-.05	+.20/-.00	+.00/-.20	
MTWS-3.5X12.8T5100-RL	3.5	13	12.8	92 FT
MTWS-3.5X13.0T5100-RL	3.5	13.2	13	92 FT
MTWS-3.5X13.8T5100-RL	3.5	14	13.8	92 FT
MTWS-3.5X14.0T5100-RL	3.5	14.2	14	92 FT
MTWS-3.5X14.8T5100-RL	3.5	15	14.8	92 FT
MTWS-3.5X15.0T5100-RL	3.5	15.2	15	92 FT
MTWS-3.5X19.8T5100-RL	3.5	20	19.8	92 FT
MTWS-3.5X20.0T5100-RL	3.5	20.2	20	92 FT
MTWS-3.5X24.8T5100-RL	3.5	25	24.8	92 FT
MTWS-3.5X25.0T5100-RL	3.5	25.2	25	92 FT
MTWS-3.5X34.8T5100-RL	3.5	35	34.8	92 FT
MTWS-3.5X49.8T5100-RL	3.5	50	49.8	92 FT
MTWS-4.0X05.4T5100-RL	4	5.6	5.4	79 FT
MTWS-4.0X05.6T5100-RL	4	5.8	5.6	79 FT
MTWS-4.0X06.0T5100-RL	4	6.2	6	79 FT
MTWS-4.0X06.1T5100-RL	4	6.3	6.1	79 FT
MTWS-4.0X07.9T5100-RL	4	8.1	7.9	79 FT
MTWS-4.0X08.0T5100-RL	4	8.2	8	79 FT
MTWS-4.0X09.5T5100-RL	4	9.7	9.5	79 FT
MTWS-4.0X09.7T5100-RL	4	9.9	9.7	79 FT
MTWS-4.0X10.0T5100-RL	4	10.2	10	79 FT
MTWS-4.0X11.8T5100-RL	4	12	11.8	79 FT
MTWS-4.0X12.8T5100-RL	4	13	12.8	79 FT
MTWS-4.0X13.0T5100-RL	4	13.2	13	79 FT
MTWS-4.0X13.8T5100-RL	4	14	13.8	79 FT
MTWS-4.0X14.0T5100-RL	4	14.2	14	79 FT
MTWS-4.0X14.8T5100-RL	4	15	14.8	79 FT
MTWS-4.0X15.0T5100-RL	4	15.2	15	79 FT
MTWS-4.0X19.8T5100-RL	4	20	19.8	79 FT
MTWS-4.0X20.0T5100-RL	4	20.2	20	79 FT
MTWS-4.0X24.8T5100-RL	4	25	24.8	79 FT
MTWS-4.0X25.0T5100-RL	4	25.2	25	79 FT
MTWS-4.0X34.8T5100-RL	4	35	34.8	79 FT
MTWS-4.0X49.8T5100-RL	4	50	49.8	79 FT

Compound information available on pages 20-37.

Surface Finish: ISO 4287 & Chamfer Information on pages 7-9.
For ISO tolerance charts, refer to pages 12-13.

MFP SEALS
www.mfpseals.com

MWRP - Tight Tolerance Metric Guide Ring - C1000

A product of MFP Seals.

MWRP - TIGHT TOLERANCE METRIC GUIDE RINGS - C1000

MFP Seals' Tight Tolerance MWRP are made from a fine weave cotton fabric and reinforced with phenolic composites. This design totally eliminates metal to metal contact and the consequent galling and scoring of cylinder bores. Wear rings are supplied butt cut or scarf cut, for easy installation, and are a low maintenance solution. Typical uses are as hydraulic cylinder wear rings, sliding bearings, bushings, or thrust bearings.

For sizes not listed please contact your MFP Seals' Sales Representative.

TEMP RANGE: -40°C TO 130°C (-40°F TO 266°F)

MAX. LOAD: 270 MPA (STATIC), 54 MPA (DYNAMIC)

MAX. PV FACTOR: 0.2 MPA X M/S (DRY)
0.38 MPA X M/S (OIL LUBRICATED)
0.60 MPA X M/S (GREASED)

FRICTIONAL COEFFICIENT: 0.13~0.17 (DRY)

MFP PART NUMBER

MWRP-040x09.5x2.5C1000

SEAL TYPE | ØD1 | L1 | C/S | COMPOUND

Max. Velocity: 2.2 m/s (7.2 ft./s)

PROFILE

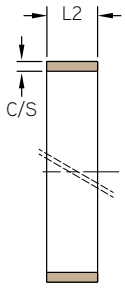

ROD APPLICATION

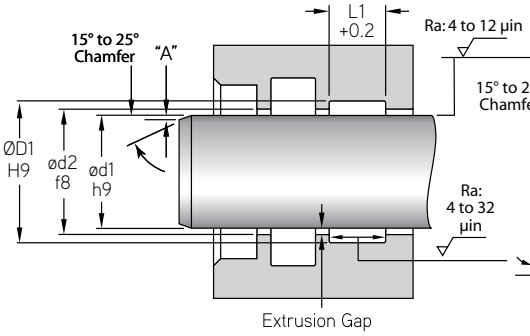

PISTON APPLICATION

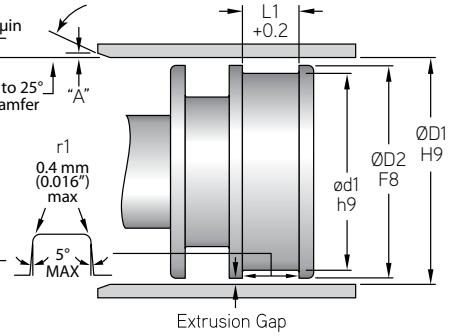

INSTALLATION RECOMMENDATIONS

PISTON			ROD		
Bore Diameter	Groove Width	Ring Thickness	Rod Diameter	Groove Width	Ring Thickness
ØD1 (H9)	**L1** (+0.2)	**C/S**	**ød1** (f8/h9)	**L1** (+0.2)	**C/S**
16 - 50.0	4.00	1.55	8 - 50.0	4.00	1.55
16 - 125.0	5.60	2.50	16 - 120.0	5.60	2.50
25 - 250.0	9.70	2.50	25 - 250.0	9.70	2.50
80 - 500.0	15.00	2.50	75 - 500.0	15.00	2.50
125 - 999.9	25.00	2.50	120 - 999.9	25.00	2.50
1000 - 1500.0	25.00	2.50	1000 - 1500.0	25.00	2.50
280 - 999.9	25.00	4.00	280 - 999.9	25.00	4.00
1000 - 1500.0	25.00	4.00	1000 - 1500.0	25.00	4.00

Surface Finish: ISO 4287 & Chamfer Information on pages 7-9.
For ISO tolerance charts, refer to pages 12-13.

Compound information available on pages 20-37.

MWRP - Tight Tolerance Metric Guide Ring - C1000

A product of MFP Seals.

MFPSEALS®
www.mfpseals.com

PROFILE **ROD APPLICATION** **PISTON APPLICATION**

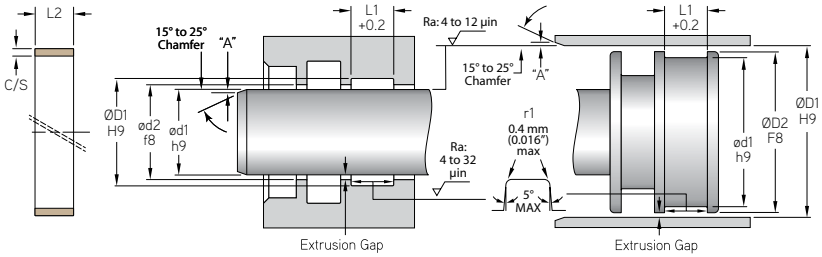

MFP PART NUMBER	ROD OR PISTON APPLICATION ØD1	ød1	L1	C/S
TOLERANCE	H9	h9	+0.2	
MWRP-022X8.0X2.0	22	18	8	2
MWRP-025X3.8X1.5	25	22	3.8	1.5
MWRP-025X8.0X2.0	25	21	8	2
MWRP-026X8.0X2.0	26	22	8	2
MWRP-026X15.0X2.0	26	22	15	2
MWRP-029X8.0X2.0	29	25	8	2
MWRP-029X20.0X2.0	29	25	20	2
MWRP-029X25.0X2.0	29	25	25	2
MWRP-030X8.0X2.0	30	26	8	2
MWRP-030X8.0X2.5	30	25	8	2.5
MWRP-030X9.5X2.5	30	25	9.5	2.5
MWRP-030X15.0X2.5	30	25	15	2.5
MWRP-030X20.0X2.5	30	25	20	2.5
MWRP-031X16.0X1.5	31	28	16	1.5
MWRP-032X8.0X2.0	32	28	8	2
MWRP-032X20.0X2.0	32	28	20	2
MWRP-033X20.0X2.5	33	28	20	2.5
MWRP-034X10.0X2.0	34	30	10	2
MWRP-034X20.0X2.0	34	30	20	2
MWRP-034X25.0X2.0	34	30	25	2
MWRP-035X10.0X2.0	35	31	10	2
MWRP-035X9.5X2.5	35	30	9.5	2.5
MWRP-035X10.0X2.5	35	30	10	2.5
MWRP-035X20.0X2.5	35	30	20	2.5
MWRP-035X25.0X2.5	35	30	25	2.5
MWRP-035X30.0X2.5	35	30	30	2.5
MWRP-036X10.0X2.0	36	32	10	2
MWRP-036X20.0X2.0	36	32	20	2
MWRP-036X6.0X2.5	36	31	6	2.5
MWRP-038X6.0X3.0	38	32	6	3
MWRP-039X10.0X2.0	39	35	10	2
MWRP-039X25.0X2.0	39	35	25	2
MWRP-040X8.0X2.0	40	36	8	2
MWRP-040X10.0X2.0	40	36	10	2
MWRP-040X20.0X2.0	40	36	20	2
MWRP-040X9.5X2.5	40	35	9.5	2.5
MWRP-040X15.0X2.5	40	35	15	2.5

Compound information available on pages 20-37.

Surface Finish: ISO 4287 & Chamfer Information on pages 7-9.
For ISO tolerance charts, refer to pages 12-13.

MFPSEALS®
www.mfpseals.com

MWRP - Tight Tolerance Metric Guide Ring - C1000

A product of MFP Seals.

PROFILE **ROD APPLICATION** **PISTON APPLICATION**

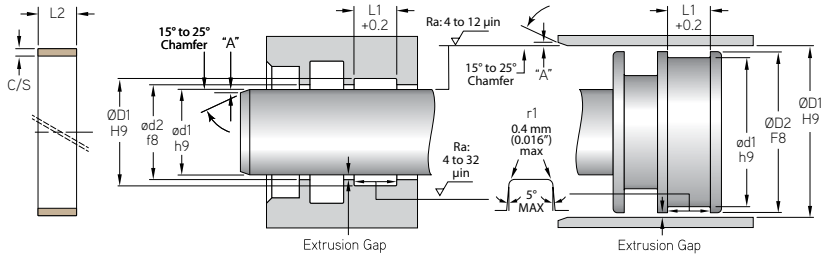

	ROD OR PISTON APPLICATION			
MFP PART NUMBER	**ØD1**	**ød1**	**L1**	**C/S**
TOLERANCE	H9	h9	+0.2	
MWRP-040X5.0X5.0	40	30	5	5
MWRP-041X9.7X3.0	41	35	9.7	3
MWRP-045X12.0X2.0	45	41	12	2
MWRP-045X20.0X2.0	45	41	20	2
MWRP-045X5.6X2.5	45	40	5.6	2.5
MWRP-045X9.5X2.5	45	40	9.5	2.5
MWRP-045X10.0X2.5	45	40	10	2.5
MWRP-045X15.0X2.5	45	40	15	2.5
MWRP-045X20.0X2.5	45	40	20	2.5
MWRP-045X5.0X3.0	45	39	5	3
MWRP-045X14.0X3.0	45	39	14	3
MWRP-045X14.5X3.0	45	39	14.5	3
MWRP-045X15.0X3.0	45	39	15	3
MWRP-046X20.0X3.0	46	40	20	3
MWRP-046X25.0X3.0	46	40	25	3
MWRP-048X22.5X1.5	48	45	22.5	1.5
MWRP-049X8.0X2.0	49	45	8	2
MWRP-049X14.5X2.0	49	45	14.5	2
MWRP-049X15.0X2.0	49	45	15	2
MWRP-049X25.0X2.0	49	45	25	2
MWRP-050X8.0X2.0	50	46	8	2
MWRP-050X9.7X2.0	50	46	9.7	2
MWRP-050X10.0X2.0	50	46	10	2
MWRP-050X12.0X2.0	50	46	12	2
MWRP-050X14.5X2.0	50	46	14.5	2
MWRP-050X15.0X2.0	50	46	15	2
MWRP-050X20.0X2.0	50	46	20	2
MWRP-050X5.0X2.5	50	45	5	2.5
MWRP-050X5.6X2.5	50	45	5.6	2.5
MWRP-050X6.3X2.5	50	45	6.3	2.5
MWRP-050X6.8X2.5	50	45	6.8	2.5
MWRP-050X8.0X2.5	50	45	8	2.5
MWRP-050X9.5X2.5	50	45	9.5	2.5
MWRP-050X10.0X2.5	50	45	10	2.5
MWRP-050X12.0X2.5	50	45	12	2.5
MWRP-050X15.0X2.5	50	45	15	2.5
MWRP-050X20.0X2.5	50	45	20	2.5

Surface Finish: ISO 4287 & Chamfer Information on pages 7-9.
For ISO tolerance charts, refer to pages 12-13.

Compound information available on pages 20-37.

MWRP - Tight Tolerance Metric Guide Ring - C1000

A product of MFP Seals.

MFPSEALS®
www.mfpseals.com

PROFILE **ROD APPLICATION** **PISTON APPLICATION**

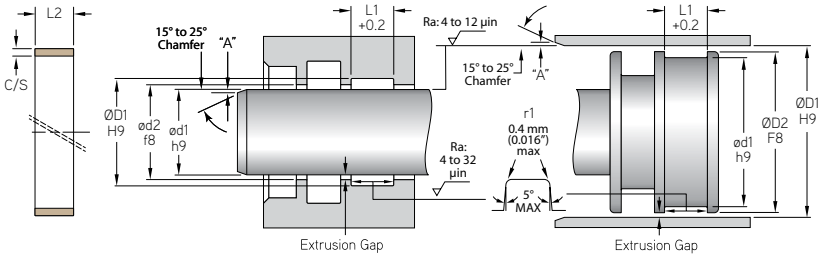

	ROD OR PISTON APPLICATION			
MFP PART NUMBER	**ØD1**	**ød1**	**L1**	**C/S**
TOLERANCE	H9	h9	+0.2	
MWRP-050X25.0X2.5	50	45	25	2.5
MWRP-050X30.0X2.5	50	45	30	2.5
MWRP-050X35.0X2.5	50	45	35	2.5
MWRP-050X8.0X3.0	50	44	8	3
MWRP-051X22.5X2.5	51	46	22.5	2.5
MWRP-051X22.5X3.0	51	45	22.5	3
MWRP-051X38.0X3.0	51	45	38	3
MWRP-052X8.0X1.5	52	49	8	1.5
MWRP-053X8.0X1.5	53	50	8	1.5
MWRP-053X12.0X1.5	53	50	12	1.5
MWRP-055X10.0X2.0	55	51	10	2
MWRP-055X8.0X2.5	55	50	8	2.5
MWRP-055X9.5X2.5	55	50	9.5	2.5
MWRP-055X9.7X2.5	55	50	9.7	2.5
MWRP-055X10.0X2.5	55	50	10	2.5
MWRP-055X15.0X2.5	55	50	15	2.5
MWRP-055X20.0X2.5	55	50	20	2.5
MWRP-055X25.0X2.5	55	50	25	2.5
MWRP-055X30.0X2.5	55	50	30	2.5
MWRP-055X6.0X3.0	55	49	6	3
MWRP-055X15.0X3.0	55	49	15	3
MWRP-055X15.5X3.0	55	49	15.5	3
MWRP-055X20.0X3.0	55	49	20	3
MWRP-056X10.0X2.5	56	51	10	2.5
MWRP-056X15.0X2.5	56	51	15	2.5
MWRP-056X10.0X3.0	56	50	10	3
MWRP-056X16.0X3.0	56	50	16	3
MWRP-056X25.0X3.0	56	50	25	3
MWRP-056X28.0X3.0	56	50	28	3
MWRP-056X30.0X3.0	56	50	30	3
MWRP-060X25.0X2.0	60	56	25	2
MWRP-060X5.5X2.5	60	55	5.5	2.5
MWRP-060X8.0X2.5	60	55	8	2.5
MWRP-060X9.5X2.5	60	55	9.5	2.5
MWRP-060X9.7X2.5	60	55	9.7	2.5
MWRP-060X10.0X2.5	60	55	10	2.5
MWRP-060X14.5X2.5	60	55	14.5	2.5

Compound information available on pages 20-37.

Surface Finish: ISO 4287 & Chamfer Information on pages 7-9.
For ISO tolerance charts, refer to pages 12-13.

MFPSEALS®
www.mfpseals.com

MWRP - Tight Tolerance Metric Guide Ring - C1000

A product of MFP Seals.

PROFILE **ROD APPLICATION** **PISTON APPLICATION**

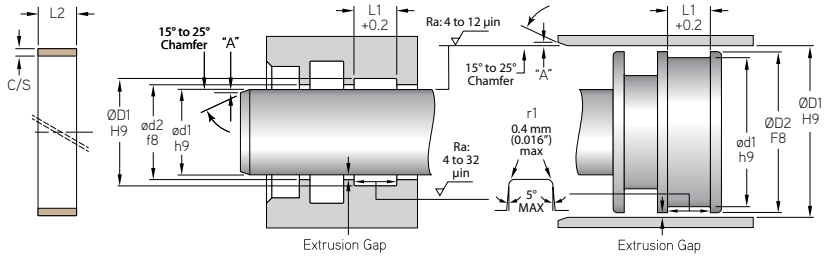

	ROD OR PISTON APPLICATION			
MFP PART NUMBER	**ØD1**	**ød1**	**L1**	**C/S**
TOLERANCE	H9	h9	+0.2	
MWRP-060X15.0X2.5	60	55	15	2.5
MWRP-060X20.0X2.5	60	55	20	2.5
MWRP-060X25.0X2.5	60	55	25	2.5
MWRP-060X30.0X2.5	60	55	30	2.5
MWRP-060X8.0X3.0	60	54	8	3
MWRP-060X15.0X3.0	60	54	15	3
MWRP-060X20.0X3.0	60	54	20	3
MWRP-060X25.0X3.0	60	54	25	3
MWRP-061X25.0X2.0	61	57	25	2
MWRP-061X9.7X2.5	61	56	9.7	2.5
MWRP-061X10.0X2.5	61	56	10	2.5
MWRP-061X15.0X2.5	61	56	15	2.5
MWRP-062X25.0X3.0	62	56	25	3
MWRP-063X4.0X2.0	63	59	4	2
MWRP-063X8.0X2.0	63	59	8	2
MWRP-063X10.0X2.0	63	59	10	2
MWRP-063X8.0X2.5	63	58	8	2.5
MWRP-063X9.5X2.5	63	58	9.5	2.5
MWRP-063X9.6X2.5	63	58	9.7	2.5
MWRP-063X10.0X2.5	63	58	10	2.5
MWRP-063X15.0X2.5	63	58	15	2.5
MWRP-063X20.0X2.5	63	58	20	2.5
MWRP-063X25.0X2.5	63	58	25	2.5
MWRP-063X15.0X3.0	63	57	15	3
MWRP-063X16.0X3.0	63	57	16	3
MWRP-064X15.0X2.0	64	60	15	2
MWRP-065X6.3X2.5	65	60	6.3	2.5
MWRP-065X9.5X2.5	65	60	9.5	2.5
MWRP-065X10.0X2.5	65	60	10	2.5
MWRP-065X15.0X2.5	65	60	15	2.5
MWRP-065X20.0X2.5	65	60	20	2.5
MWRP-065X25.0X2.5	65	60	25	2.5
MWRP-065X30.0X2.5	65	60	30	2.5
MWRP-065X32.0X2.5	65	60	32	2.5
MWRP-065X10.0X3.0	65	59	10	3
MWRP-065X15.0X3.0	65	59	15	3
MWRP-065X16.0X3.0	65	59	16	3

Surface Finish: ISO 4287 & Chamfer Information on pages 7-9.
For ISO tolerance charts, refer to pages 12-13.

Compound information available on pages 20-37.

MWRP - Tight Tolerance Metric Guide Ring - C1000

A product of MFP Seals.

MFPSEALS®
www.mfpseals.com

PROFILE **ROD APPLICATION** **PISTON APPLICATION**

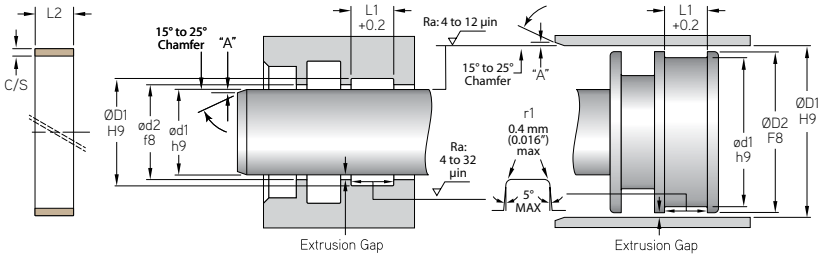

MFP PART NUMBER	ROD OR PISTON APPLICATION ØD1	ød1	L1	C/S
TOLERANCE	H9	h9	+0.2	
MWRP-065X20.0X3.0	65	59	20	3
MWRP-065X12.0X4.0	65	57	12	4
MWRP-065X10.0X5.0	65	55	10	5
MWRP-066X20.0X2.5	66	61	20	2.5
MWRP-066X10.0X3.0	66	60	10	3
MWRP-066X50.0X3.0	66	60	50	3
MWRP-068X15.0X2.5	68	63	15	2.5
MWRP-069X35.0X2.0	69	65	35	2
MWRP-069X10.0X2.5	69	64	10	2.5
MWRP-069X20.0X2.5	69	64	20	2.5
MWRP-069X30.0X3.0	69	63	30	3
MWRP-069X31.5X3.0	69	63	31.5	3
MWRP-070X10.0X2.0	70	66	10	2
MWRP-070X5.6X2.5	70	65	5.6	2.5
MWRP-070X9.5X2.5	70	65	9.5	2.5
MWRP-070X9.7X2.5	70	65	9.7	2.5
MWRP-070X10.0X2.5	70	65	10	2.5
MWRP-070X15.0X2.5	70	65	15	2.5
MWRP-070X20.0X2.5	70	65	20	2.5
MWRP-070X25.0X2.5	70	65	25	2.5
MWRP-070X12.0X3.0	70	64	12	3
MWRP-070X12.4X3.0	70	64	12.4	3
MWRP-070X14.0X3.0	70	64	14	3
MWRP-070X14.5X3.0	70	64	14.5	3
MWRP-070X15.0X3.0	70	64	15	3
MWRP-070X19.5X3.0	70	64	19.5	3
MWRP-070X20.0X3.0	70	64	20	3
MWRP-070X15.0X5.0	70	60	15	5
MWRP-071X10.0X2.5	71	66	10	2.5
MWRP-071X20.0X2.5	71	66	20	2.5
MWRP-075X9.5X2.5	75	70	9.5	2.5
MWRP-075X9.7X2.5	75	70	9.7	2.5
MWRP-075X10.0X2.5	75	70	10	2.5
MWRP-075X15.0X2.5	75	70	15	2.5
MWRP-075X20.0X2.5	75	70	20	2.5
MWRP-075X25.0X2.5	75	70	25	2.5
MWRP-075X30.0X2.5	75	70	30	2.5

Compound information available on pages 20-37.

Surface Finish: ISO 4287 & Chamfer Information on pages 7-9.
For ISO tolerance charts, refer to pages 12-13.

MFPSEALS®
www.mfpseals.com

MWRP - Tight Tolerance Metric Guide Ring - C1000

A product of MFP Seals.

PROFILE **ROD APPLICATION** **PISTON APPLICATION**

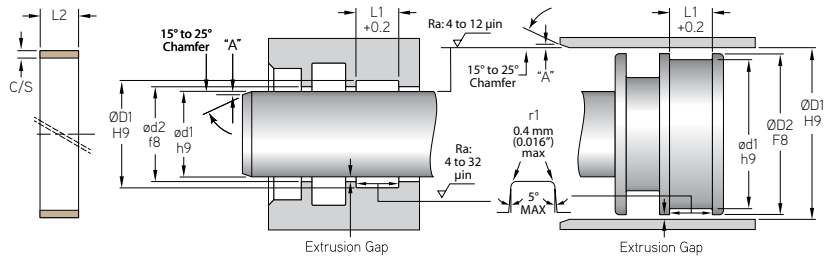

MFP PART NUMBER	ROD OR PISTON APPLICATION ØD1	ød1	L1	C/S
TOLERANCE	H9	h9	+0.2	
MWRP-075X40.0X2.5	75	70	40	2.5
MWRP-075X50.0X2.5	75	70	50	2.5
MWRP-075X12.5X3.0	75	69	12.5	3
MWRP-075X15.0X3.0	75	69	15	3
MWRP-075X20.0X3.0	75	69	20	3
MWRP-075X25.0X3.0	75	69	25	3
MWRP-075X11.8X4.0	75	67	11.8	4
MWRP-075X15.0X5.5	75	64	15	5.5
MWRP-076X20.0X2.5	76	71	20	2.5
MWRP-076X10.0X3.0	76	70	10	3
MWRP-076X20.0X3.0	76	70	20	3
MWRP-080X5.0X2.0	80	76	5	2
MWRP-080X8.0X2.0	80	76	8	2
MWRP-080X10.0X2.0	80	76	10	2
MWRP-080X15.0X2.0	80	76	15	2
MWRP-080X30.0X2.0	80	76	30	2
MWRP-080X9.5X2.5	80	75	9.5	2.5
MWRP-080X10.0X2.5	80	75	10	2.5
MWRP-080X15.0X2.5	80	75	15	2.5
MWRP-080X20.0X2.5	80	75	20	2.5
MWRP-080X25.0X2.5	80	75	25	2.5
MWRP-080X6.0X3.0	80	74	6	3
MWRP-080X10.0X3.0	80	74	10	3
MWRP-080X12.0X3.0	80	74	12	3
MWRP-080X15.0X3.0	80	74	15	3
MWRP-080X20.0X3.0	80	74	20	3
MWRP-080X25.0X3.0	80	74	25	3
MWRP-080X10.0X3.1	80	73.8	10	3.1
MWRP-080X10.0X3.5	80	73	10	3.5
MWRP-081X25.0X3.0	81	75	25	3
MWRP-081X37.5X3.0	81	75	37.5	3
MWRP-082X12.0X5.0	82	72	12	5
MWRP-083X6.0X4.0	83	75	6	4
MWRP-085X9.5X2.5	85	80	9.5	2.5
MWRP-085X9.7X2.5	85	80	9.7	2.5
MWRP-085X15.0X2.5	85	80	15	2.5
MWRP-085X20.0X2.5	85	80	20	2.5

Surface Finish: ISO 4287 & Chamfer Information on pages 7-9.
For ISO tolerance charts, refer to pages 12-13.

Compound information available on pages 20-37.

MWRP - Tight Tolerance Metric Guide Ring - C1000

A product of MFP Seals.

MFPSEALS®
www.mfpseals.com

PROFILE **ROD APPLICATION** **PISTON APPLICATION**

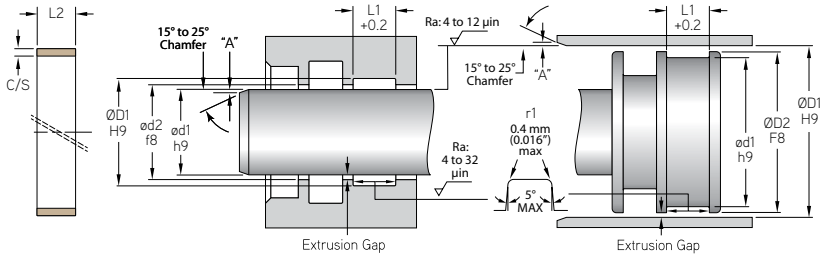

	ROD OR PISTON APPLICATION			
MFP PART NUMBER	**ØD1**	**ød1**	**L1**	**C/S**
TOLERANCE	H9	h9	+0.2	
MWRP-085X25.0X2.5	85	80	25	2.5
MWRP-085X35.0X2.5	85	80	35	2.5
MWRP-085X10.0X3.0	85	79	10	3
MWRP-085X12.5X3.0	85	79	12.5	3
MWRP-085X15.0X3.0	85	79	15	3
MWRP-085X20.0X3.0	85	79	20	3
MWRP-085X25.0X3.0	85	79	25	3
MWRP-085X10.0X5.0	85	75	10	5
MWRP-086X25.0X3.0	86	80	25	3
MWRP-086X40.0X3.0	86	80	40	3
MWRP-089X10.0X3.5	89	82	10	3.5
MWRP-090X20.0X2.0	90	86	20	2
MWRP-090X6.0X2.5	90	85	6	2.5
MWRP-090X9.5X2.5	90	85	9.5	2.5
MWRP-090X9.7X2.5	90	85	9.7	2.5
MWRP-090X10.0X2.5	90	85	10	2.5
MWRP-090X14.7X2.5	90	85	14.7	2.5
MWRP-090X15.0X2.5	90	85	15	2.5
MWRP-090X20.0X2.5	90	85	20	2.5
MWRP-090X25.0X2.5	90	85	25	2.5
MWRP-090X35.0X2.5	90	85	35	2.5
MWRP-090X40.0X2.5	90	85	40	2.5
MWRP-090X10.0X3.0	90	84	10	3
MWRP-090X12.2X3.0	90	84	12.2	3
MWRP-090X12.5X3.0	90	84	12.5	3
MWRP-090X15.0X3.0	90	84	15	3
MWRP-090X20.0X3.0	90	84	20	3
MWRP-090X25.0X3.0	90	84	25	3
MWRP-090X30.0X3.0	90	84	30	3
MWRP-090X35.0X3.0	90	84	35	3
MWRP-090X15.0X3.2	90	83.7	15	3.2
MWRP-090X5.6X4.0	90	82	5.6	4
MWRP-090X15.0X4.0	90	82	15	4
MWRP-090X12.5X4.5	90	81	12.5	4.5
MWRP-093X12.0X4.5	93	84	12	4.5
MWRP-095X6.0X2.5	95	90	6	2.5
MWRP-095X7.9X2.5	95	90	7.9	2.5

Compound information available on pages 20-37.

Surface Finish: ISO 4287 & Chamfer Information on pages 7-9.
For ISO tolerance charts, refer to pages 12-13.

MFPSEALS®
www.mfpseals.com

MWRP - Tight Tolerance Metric Guide Ring - C1000

A product of MFP Seals.

PROFILE **ROD APPLICATION** **PISTON APPLICATION**

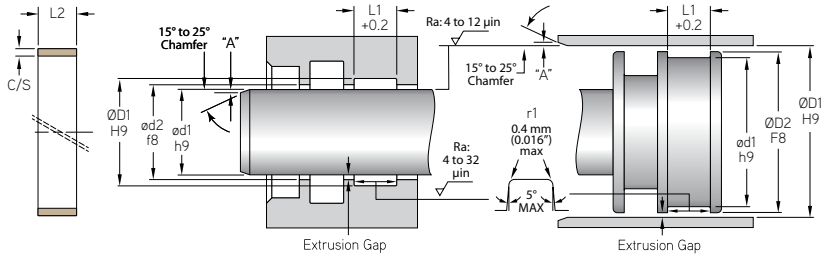

MFP PART NUMBER	ROD OR PISTON APPLICATION ØD1	ød1	L1	C/S
TOLERANCE	H9	h9	+0.2	
MWRP-095X9.5X2.5	95	90	9.5	2.5
MWRP-095X10.0X2.5	95	90	10	2.5
MWRP-095X12.5X2.5	95	90	12.5	2.5
MWRP-095X15.0X2.5	95	90	15	2.5
MWRP-095X25.0X2.5	95	90	25	2.5
MWRP-095X50.0X2.5	95	90	50	2.5
MWRP-095X12.5X3.0	95	89	12.5	3
MWRP-095X15.0X3.0	95	89	15	3
MWRP-095X20.0X3.0	95	89	20	3
MWRP-095X25.0X3.0	95	89	25	3
MWRP-095X6.0X4.0	95	87	6	4
MWRP-095X15.0X4.0	95	87	15	4
MWRP-095X12.0X4.5	95	86	12	4.5
MWRP-095X12.3X4.5	95	86	12.3	4.5
MWRP-095X12.5X4.5	95	86	12.5	4.5
MWRP-096X29.0X3.0	96	90	29	3
MWRP-100X5.0X2.0	100	96	5	2
MWRP-100X8.0X2.0	100	96	8	2
MWRP-100X9.7X2.0	100	96	9.7	2
MWRP-100X10.0X2.0	100	96	10	2
MWRP-100X15.0X2.0	100	96	15	2
MWRP-100X5.6X2.5	100	95	5.6	2.5
MWRP-100X6.0X2.5	100	95	6	2.5
MWRP-100X7.9X2.5	100	95	7.9	2.5
MWRP-100X8.0X2.5	100	95	8	2.5
MWRP-100X9.5X2.5	100	95	9.5	2.5
MWRP-100X9.8X2.5	100	95	9.8	2.5
MWRP-100X12.5X2.5	100	95	12.5	2.5
MWRP-100X15.0X2.5	100	95	15	2.5
MWRP-100X20.0X2.5	100	95	20	2.5
MWRP-100X25.0X2.5	100	95	25	2.5
MWRP-100X30.0X2.5	100	95	30	2.5
MWRP-100X10.0X3.0	100	94	10	3
MWRP-100X12.5X3.0	100	94	12.5	3
MWRP-100X14.0X3.0	100	94	14	3
MWRP-100X15.0X3.0	100	94	15	3
MWRP-100X20.0X3.0	100	94	20	3

Surface Finish: ISO 4287 & Chamfer Information on pages 7-9.
For ISO tolerance charts, refer to pages 12-13.

Compound information available on pages 20-37.

MWRP - Tight Tolerance Metric Guide Ring - C1000

A product of MFP Seals.

MFPSEALS®
www.mfpseals.com

PROFILE **ROD APPLICATION** **PISTON APPLICATION**

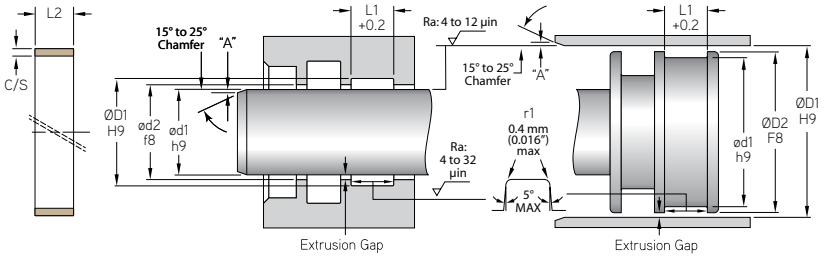

	ROD OR PISTON APPLICATION			
MFP PART NUMBER	**ØD1**	**ød1**	**L1**	**C/S**
TOLERANCE	H9	h9	+0.2	
MWRP-100X25.0X3.0	100	94	25	3
MWRP-100X30.0X3.0	100	94	30	3
MWRP-100X15.0X3.2	100	93.6	15	3.2
MWRP-100X12.0X3.5	100	93	12	3.5
MWRP-100X10.0X4.0	100	92	10	4
MWRP-100X15.0X4.0	100	92	15	4
MWRP-100X30.0X4.0	100	92	30	4
MWRP-100X10.0X4.5	100	91	10	4.5
MWRP-100X12.1X4.5	100	91	12.1	4.5
MWRP-100X12.5X4.5	100	91	12.5	4.5
MWRP-102X8.0X3.0	102	96	8	3
MWRP-103X12.0X4.5	103	94	12	4.5
MWRP-105X20.0X2.0	105	101	20	2
MWRP-105X6.0X2.5	105	100	6	2.5
MWRP-105X6.1X2.5	105	100	6.1	2.5
MWRP-105X7.9X2.5	105	100	7.9	2.5
MWRP-105X8.0X2.5	105	100	8	2.5
MWRP-105X9.5X2.5	105	100	9.5	2.5
MWRP-105X10.0X2.5	105	100	10	2.5
MWRP-105X15.0X2.5	105	100	15	2.5
MWRP-105X20.0X2.5	105	100	20	2.5
MWRP-105X25.0X2.5	105	100	25	2.5
MWRP-105X35.0X2.5	105	100	35	2.5
MWRP-105X10.0X3.0	105	99	10	3
MWRP-105X12.3X3.0	105	99	12.3	3
MWRP-105X12.5X3.0	105	99	12.5	3
MWRP-105X15.0X3.0	105	99	15	3
MWRP-150X20.0X3.0	105	99	20	3
MWRP-105X25.0X3.0	105	99	25	3
MWRP-105X30.0X3.0	105	99	30	3
MWRP-105X12.5X4.5	105	96	12.5	4.5
MWRP-106X15.0X3.0	106	100	15	3
MWRP-106X20.0X3.0	106	100	20	3
MWRP-106X25.0X3.0	106	100	25	3
MWRP-106X25.0X3.5	106	99	25	3.5
MWRP-108X15.0X3.0	108	102	15	3
MWRP-110X15.0X2.0	110	106	15	2

Compound information available on pages 20-37.

Surface Finish: ISO 4287 & Chamfer Information on pages 7-9.
For ISO tolerance charts, refer to pages 12-13.

MFPSEALS®
www.mfpseals.com

MWRP - Tight Tolerance Metric Guide Ring - C1000

A product of MFP Seals.

PROFILE **ROD APPLICATION** **PISTON APPLICATION**

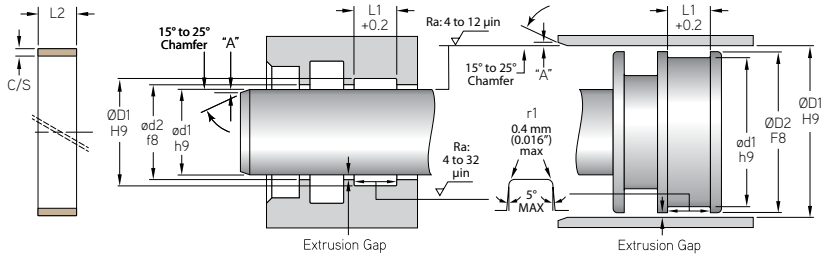

MFP PART NUMBER	ROD OR PISTON APPLICATION ØD1	ød1	L1	C/S
TOLERANCE	H9	h9	+0.2	
MWRP-110X6.0X2.5	110	105	6	2.5
MWRP-110X7.9X2.5	110	105	7.9	2.5
MWRP-110X8.0X2.5	110	105	8	2.5
MWRP-110X9.5X2.5	110	105	9.5	2.5
MWRP-110X10.0X2.5	110	105	10	2.5
MWRP-110X15.0X2.5	110	105	15	2.5
MWRP-110X20.0X2.5	110	105	20	2.5
MWRP-110X25.0X2.5	110	105	25	2.5
MWRP-110X30.0X2.5	110	105	30	2.5
MWRP-110X12.0X3.0	110	104	12	3
MWRP-110X12.3X3.0	110	104	12.3	3
MWRP-110X13.0X3.0	110	104	13	3
MWRP-110X14.0X3.0	110	104	14	3
MWRP-110X15.0X3.0	110	104	15	3
MWRP-110X20.0X3.0	110	104	20	3
MWRP-110X25.0X3.0	110	104	25	3
MWRP-110X30.0X3.0	110	104	30	3
MWRP-110X40.0X3.0	110	104	40	3
MWRP-110X35.0X3.5	110	103	35	3.5
MWRP-110X15.0X4.0	110	102	15	4
MWRP-110X10.0X4.5	110	101	10	4.5
MWRP-110X12.1X4.5	110	101	12.1	4.5
MWRP-110X12.5X4.5	110	101	12.5	4.5
MWRP-110X15.0X4.5	110	101	15	4.5
MWRP-112X10.0X3.0	112	106	10	3
MWRP-112X15.0X3.0	112	106	15	3
MWRP-112X20.0X3.0	112	106	20	3
MWRP-112X30.0X3.0	112	106	30	3
MWRP-115X6.0X2.5	115	110	6	2.5
MWRP-115X7.9X2.5	115	110	7.9	2.5
MWRP-115X8.0X2.5	115	110	8	2.5
MWRP-115X9.5X2.5	115	110	9.5	2.5
MWRP-115X10.0X2.5	115	110	10	2.5
MWRP-115X15.0X2.5	115	110	15	2.5
MWRP-115X20.0X2.5	115	110	20	2.5
MWRP-115X25.0X2.5	115	110	25	2.5
MWRP-115X30.0X2.5	115	110	30	2.5

Surface Finish: ISO 4287 & Chamfer Information on pages 7-9.
For ISO tolerance charts, refer to pages 12-13.

Compound information available on pages 20-37.

MWRP - Tight Tolerance Metric Guide Ring - C1000

A product of MFP Seals.

MFPSEALS®
www.mfpseals.com

PROFILE **ROD APPLICATION** **PISTON APPLICATION**

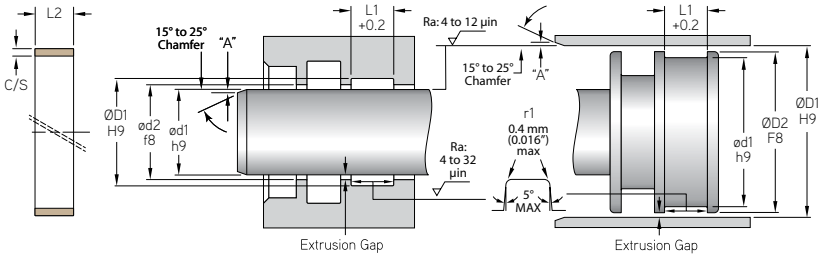

MFP PART NUMBER	ROD OR PISTON APPLICATION ØD1	ød1	L1	C/S
TOLERANCE	H9	h9	+0.2	
MWRP-115X35.0X2.5	115	110	35	2.5
MWRP-115X15.0X3.0	115	109	15	3
MWRP-115X30.0X3.0	115	109	30	3
MWRP-115X8.0X4.0	115	107	8	4
MWRP-115X15.0X4.0	115	107	15	4
MWRP-115X15.0X4.5	115	106	15	4.5
MWRP-115X15.0X5.0	115	105	15	5
MWRP-115X20.0X5.0	115	105	20	5
MWRP-116X30.0X3.0	116	110	30	3
MWRP-118X30.0X4.0	118	110	30	4
MWRP-118X15.0X5.0	118	108	15	5
MWRP-120X7.9X2.5	120	115	7.9	2.5
MWRP-120X8.0X2.5	120	115	8	2.5
MWRP-120X9.5X2.5	120	115	9.5	2.5
MWRP-120X9.7X2.5	120	115	9.7	2.5
MWRP-120X10.0X2.5	120	115	10	2.5
MWRP-120X14.6X2.5	120	115	14.6	2.5
MWRP-120X15.0X2.5	120	115	15	2.5
MWRP-120X20.0X2.5	120	115	20	2.5
MWRP-120X25.0X2.5	120	115	25	2.5
MWRP-120X10.0X3.0	120	114	10	3
MWRP-120X12.0X3.0	120	114	12	3
MWRP-120X15.0X3.0	120	114	15	3
MWRP-120X20.0X3.0	120	114	20	3
MWRP-120X25.0X3.0	120	114	25	3
MWRP-120X30.0X3.0	120	114	30	3
MWRP-120X35.0X3.0	120	114	35	3
MWRP-120X14.8X3.5	120	113	14.8	3.5
MWRP-120C30.0X3.5	120	113	30	3.5
MWRP-120X5.9X4.0	120	112	5.9	4
MWRP-120X8.0X4.0	120	112	8	4
MWRP-120X9.5X4.0	120	112	9.5	4
MWRP-120X15.0X4.0	120	112	15	4
MWRP-120X15.0X4.5	120	111	15	4.5
MWRP-120X16.0X5.0	120	110	16	5
MWRP-122X15.0X2.5	122	117	15	2.5
MWRP-123X20.0X1.5	123	120	20	1.5

Compound information available on pages 20-37.

Surface Finish: ISO 4287 & Chamfer Information on pages 7-9.
For ISO tolerance charts, refer to pages 12-13.

MFPSEALS®
www.mfpseals.com

MWRP - Tight Tolerance Metric Guide Ring - C1000

A product of MFP Seals.

PROFILE **ROD APPLICATION** **PISTON APPLICATION**

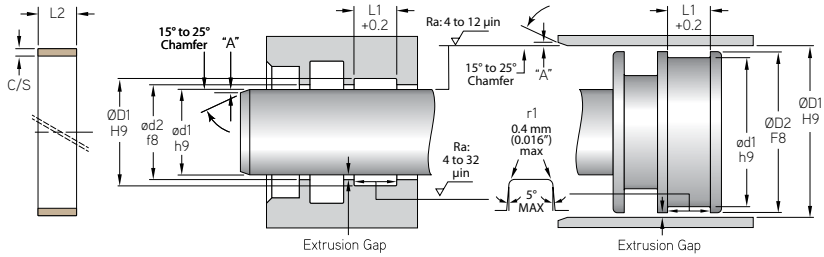

	ROD OR PISTON APPLICATION			
MFP PART NUMBER	**ØD1**	**ød1**	**L1**	**C/S**
TOLERANCE	H9	h9	+0.2	
MWRP-124X15.0X5.0	124	114	15	5
MWRP-125X10.0X2.0	125	121	10	2
MWRP-125X7.9X2.5	125	120	7.9	2.5
MWRP-125X8.0X2.5	125	120	8	2.5
MWRP-125X9.0X2.5	125	120	9	2.5
MWRP-125X9.5X2.5	125	120	9.5	2.5
MWRP-125X10.0X2.5	125	120	10	2.5
MWRP-125X12.0X2.5	125	120	12	2.5
MWRP-125X15.0X2.5	125	120	15	2.5
MWRP-125X20.0X2.5	125	120	20	2.5
MWRP-125X25.0X2.5	125	120	25	2.5
MWRP-125X30.0X2.5	125	120	30	2.5
MWRP-125X40.0X2.5	125	120	40	2.5
MWRP-125X50.0X2.5	125	120	50	2.5
MWRP-125X8.0X3.0	125	119	8	3
MWRP-125X10.0X3.0	125	119	10	3
MWRP-125X15.0X3.0	125	119	15	3
MWRP-125X20.0X3.0	125	119	20	3
MWRP-125X25.0X3.0	125	119	25	3
MWRP-125X30.0X3.0	125	119	30	3
MWRP-125X10.0X3.5	125	118	10	3.5
MWRP-125X15.0X3.5	125	118	15	3.5
MWRP-125X18.4X3.5	125	118	18.4	3.5
MWRP-125X30.0X3.5	125	118	30	3.5
MWRP-125X50.0X3.5	125	118	50	3.5
MWRP-125X8.0X4.0	125	117	8	4
MWRP-125X15.0X5.5	125	114	15	5.5
MWRP-126X10.0X3.0	126	120	10	3
MWRP-126X30.0X3.0	126	120	30	3
MWRP-127X30.0X3.5	127	120	30	3.5
MWRP-129X30.0X5.0	129	119	30	5
MWRP-130X7.9X2.5	130	125	7.9	2.5
MWRP-130X8.0X2.5	130	125	8	2.5
MWRP-130X9.5X2.5	130	125	9.5	2.5
MWRP-130X9.7X2.5	130	125	9.7	2.5
MWRP-130X10.0X2.5	130	125	10	2.5
MWRP-130X15.0X2.5	130	125	15	2.5

Surface Finish: ISO 4287 & Chamfer Information on pages 7-9.
For ISO tolerance charts, refer to pages 12-13.

Compound information available on pages 20-37.

MWRP - Tight Tolerance Metric Guide Ring - C1000

A product of MFP Seals.

MFPSEALS®
www.mfpseals.com

PROFILE **ROD APPLICATION** **PISTON APPLICATION**

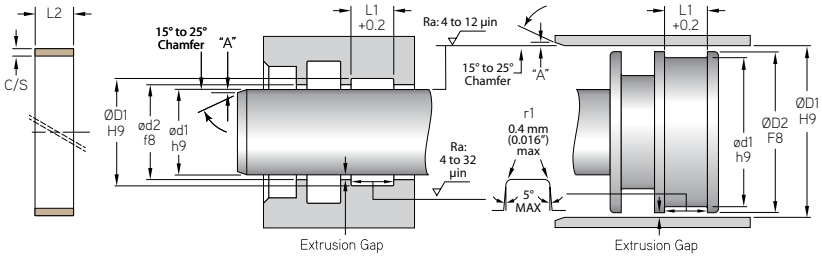

	ROD OR PISTON APPLICATION			
MFP PART NUMBER	**ØD1**	**ød1**	**L1**	**C/S**
TOLERANCE	H9	h9	+0.2	
MWRP-130X20.0X2.5	130	125	20	2.5
MWRP-130X25.0X2.5	130	125	25	2.5
MWRP-130X30.0X3.0	130	124	30	3
MWRP-130X10.0X3.5	130	123	10	3.5
MWRP-130X15.0X3.5	130	123	15	3.5
MWRP-130X20.0X3.5	130	123	20	3.5
MWRP-130X25.0X3.5	130	123	25	3.5
MWRP-130X30.0X3.5	130	123	30	3.5
MWRP-130X35.0X3.5	130	123	35	3.5
MWRP-130X40.0X3.5	130	123	40	3.5
MWRP-130X7.9X4.0	130	122	7.9	4
MWRP-130X8.0X4.0	130	122	8	4
MWRP-130X15.0X5.0	130	120	15	5
MWRP-130X16.0X5.0	130	120	16	5
MWRP-131X22.0X2.0	131	127	22	2
MWRP-131X25.0X3.0	131	125	25	3
MWRP-132X35.0X3.5	132	125	35	3.5
MWRP-135X7.0X2.5	135	130	7	2.5
MWRP-135X7.9X2.5	135	130	7.9	2.5
MWRP-135X8.0X2.5	135	130	8	2.5
MWRP-135X9.5X2.5	135	130	9.5	2.5
MWRP-135X15.0X2.5	135	130	15	2.5
MWRP-135X8.0X3.0	135	129	8	3
MWRP-135X14.0X3.0	135	129	14	3
MWRP-135X20.0X3.0	135	129	20	3
MWRP-135X25.0X3.0	135	129	25	3
MWRP-135X30.0X3.0	135	129	30	3
MWRP-135X35.0X3.0	135	129	35	3
MWRP-135X9.7X3.5	135	128	9.7	3.5
MWRP-135X10.0X3.5	135	128	10	3.5
MWRP-135X15.0X3.5	135	128	15	3.5
MWRP-135X25.0X3.5	135	128	25	3.5
MWRP-135X35.0X3.5	135	128	35	3.5
MWRP-135X50.0X3.5	135	128	50	3.5
MWRP-135X8.0X4.0	135	127	8	4
MWRP-135X9.7X4.0	135	127	9.7	4
MWRP-135X9.8X4.0	135	127	9.8	4

Compound information available on pages 20-37.

Surface Finish: ISO 4287 & Chamfer Information on pages 7-9.
For ISO tolerance charts, refer to pages 12-13.

MFPSEALS®
www.mfpseals.com

MWRP - Tight Tolerance Metric Guide Ring - C1000

A product of MFP Seals.

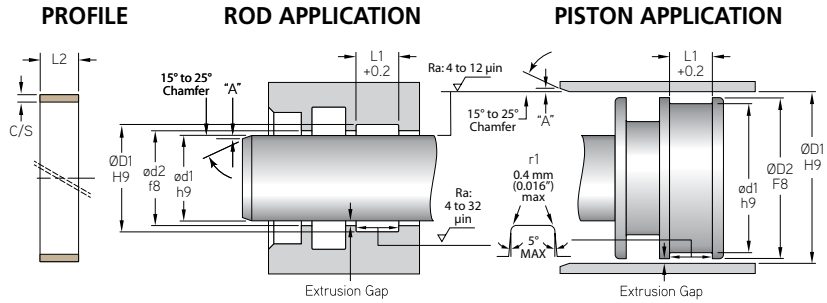

MFP PART NUMBER	ROD OR PISTON APPLICATION ØD1	ød1	L1	C/S
TOLERANCE	H9	h9	+0.2	
MWRP-135X15.0X4.0	135	127	15	4
MWRP-135X15.0X5.0	135	125	15	5
MWRP-136X10.0X3.0	136	130	10	3
MWRP-137X30.0X3.5	137	130	30	3.5
MWRP-137X17.0X5.0	137	127	17	5
MWRP-138X20.0X3.0	138	132	20	3
MWRP-140X7.9X2.5	140	135	7.9	2.5
MWRP-140X8.0X2.5	140	135	8	2.5
MWRP-140X9.5X2.5	140	135	9.5	2.5
MWRP-140X9.7X2.5	140	135	9.7	2.5
MWRP-140X10.0X2.5	140	135	10	2.5
MWRP-140X15.0X2.5	140	135	15	2.5
MWRP-140X20.0X2.5	140	135	20	2.5
MWRP-140X25.0X2.5	140	135	25	2.5
MWRP-140X30.0X2.5	140	135	30	2.5
MWRP-140X35.0X2.5	140	135	35	2.5
MWRP-140X50.0X2.5	140	135	50	2.5
MWRP-140X25.0X3.0	140	134	25	3
MWRP-140X30.0X3.0	140	134	30	3
MWRP-140X40.0X3.0	140	134	40	3
MWRP-140X50.0X3.0	140	134	50	3
MWRP-140X10.0X3.5	140	133	10	3.5
MWRP-140X15.0X3.5	140	133	15	3.5
MWRP-140X17.5X3.5	140	133	17.5	3.5
MWRP-140X20.0X3.5	140	133	20	3.5
MWRP-140X25.0X3.5	140	133	25	3.5
MWRP-140X30.0X3.5	140	133	30	3.5
MWRP-140X34.5X3.5	140	133	34.5	3.5
MWRP-140X35.0X3.5	140	133	35	3.5
MWRP-140X40.0X3.5	140	133	40	3.5
MWRP-140X45.0X3.5	140	133	45	3.5
MWRP-140X50.0X3.5	140	133	50	3.5
MWRP-140X8.0X4.0	140	132	8	4
MWRP-140X30.0X5.0	140	130	30	5
MWRP-140X17.0X6.0	140	128	17	6
MWRP-140X17.5X6.0	140	128	17.5	6
MWRP-140X20.0X6.0	140	128	20	6

Surface Finish: ISO 4287 & Chamfer Information on pages 7-9.
For ISO tolerance charts, refer to pages 12-13.

Compound information available on pages 20-37.

MWRP - Tight Tolerance Metric Guide Ring - C1000

A product of MFP Seals.

MFPSEALS®
www.mfpseals.com

PROFILE **ROD APPLICATION** **PISTON APPLICATION**

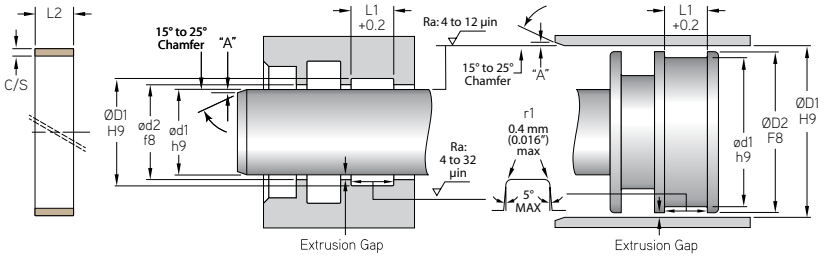

MFP PART NUMBER	ROD OR PISTON APPLICATION ØD1	ød1	L1	C/S
TOLERANCE	H9	h9	+0.2	
MWRP-140X15.0X11.5	140	117	15	11.5
MWRP-142X15.0X3.5	142	135	15	3.5
MWRP-145X7.9X2.5	145	140	7.9	2.5
MWRP-145X8.0X2.5	145	140	8	2.5
MWRP-145X9.5X2.5	145	140	9.5	2.5
MWRP-145X10.0X2.5	145	140	10	2.5
MWRP-145X15.0X2.5	145	140	15	2.5
MWRP-145X19.8X2.5	145	140	19.8	2.5
MWRP-145X20.0X2.5	145	140	20	2.5
MWRP-145X25.0X2.5	145	140	25	2.5
MWRP-145X50.0X2.5	145	140	50	2.5
MWRP-145X9.7X3.5	145	138	9.7	3.5
MWRP-145X10.0X3.5	145	138	10	3.5
MWRP-145X15.0X3.5	145	138	15	3.5
MWRP-145X20.0X3.5	145	138	20	3.5
MWRP-145X25.0X3.5	145	138	25	3.5
MWRP-145X30.0X3.5	145	138	30	3.5
MWRP-145X35.0X3.5	145	138	35	3.5
MWRP-145X50.0X3.5	145	138	50	3.5
MWRP-145X17.5X6.0	145	133	17.5	6
MWRP-145X40.0X7.5	145	130	40	7.5
MWRP-147X30.0X3.5	147	140	30	3.5
MWRP-147X40.0X3.5	147	140	40	3.5
MWRP-150X7.9X2.5	150	145	7.9	2.5
MWRP-150X8.0X2.5	150	145	8	2.5
MWRP-150X9.5X2.5	150	145	9.5	2.5
MWRP-150X9.7X2.5	150	145	9.7	2.5
MWRP-150X10.0X2.5	150	145	10	2.5
MWRP-150X15.0X2.5	150	145	15	2.5
MWRP-150X20.0X2.5	150	145	20	2.5
MWRP-150X25.0X2.5	150	145	25	2.5
MWRP-150X35.0X2.5	150	145	35	2.5
MWRP-150X40.0X2.5	150	145	40	2.5
MWRP-150X50.0X2.5	150	145	50	2.5
MWRP-150X20.0X3.0	150	144	20	3
MWRP-150X35.0X3.0	150	144	35	3
MWRP-150X40.0X3.0	150	144	40	3

Compound information available on pages 20-37.

Surface Finish: ISO 4287 & Chamfer Information on pages 7-9.
For ISO tolerance charts, refer to pages 12-13.

MFPSEALS®
www.mfpseals.com

MWRP - Tight Tolerance Metric Guide Ring - C1000

A product of MFP Seals.

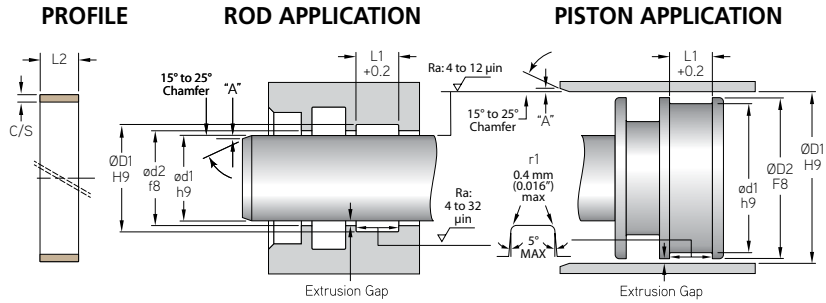

MFP PART NUMBER	ROD OR PISTON APPLICATION ØD1	ød1	L1	C/S
TOLERANCE	H9	h9	+0.2	
MWRP-150X50.0X3.0	150	144	50	3
MWRP-150X10.0X3.5	150	143	10	3.5
MWRP-150X15.0X3.5	150	143	15	3.5
MWRP-150X17.5X3.5	150	143	17.5	3.5
MWRP-150X20.0X3.5	150	143	20	3.5
MWRP-150X25.0X3.5	150	143	25	3.5
MWRP-150X30.0X3.5	150	143	30	3.5
MWRP-150X35.0X3.5	150	143	35	3.5
MWRP-150X40.0X3.5	150	143	40	3.5
MWRP-150X45.0X3.5	150	143	45	3.5
MWRP-150X50.0X3.5	150	143	50	3.5
MWRP-150X8.0X4.0	150	142	8	4
MWRP-150X15.0X4.0	150	142	15	4
MWRP-150X17.0X4.0	150	142	17	4
MWRP-150X20.0X4.0	150	142	20	4
MWRP-150X25.0X4.0	150	142	25	4
MWRP-150X9.5X5.0	150	140	9.5	5
MWRP-150X12.0X6.0	150	138	12	6
MWRP-150X17.0X6.0	150	138	17	6
MWRP-150X17.5X6.0	150	138	17.5	6
MWRP-151X50.0X3.0	151	145	50	3
MWRP-152X15.0X2.5	152	147	15	2.5
MWRP-155X7.9X2.5	155	150	7.9	2.5
MWRP-155X8.0X2.5	155	150	8	2.5
MWRP-155X9.5X2.5	155	150	9.5	2.5
MWRP-155X10.0X2.5	155	150	10	2.5
MWRP-155X15.0X2.5	155	150	15	2.5
MWRP-155X20.0X2.5	155	150	20	2.5
MWRP-155X25.0X2.5	155	150	25	2.5
MWRP-155X35.0X3.5	155	148	35	3.5
MWRP-156X35.0X3.0	156	150	35	3
MWRP-157X25.0X2.5	157	152	25	2.5
MWRP-157X40.0X3.5	157	150	40	3.5
MWRP-160X19.5X2.0	160	156	19.5	2
MWRP-160X7.9X2.5	160	155	7.9	2.5
MWRP-160X8.0X2.5	160	155	8	2.5
MWRP-160X9.5X2.5	160	155	9.5	2.5

Surface Finish: ISO 4287 & Chamfer Information on pages 7-9.
For ISO tolerance charts, refer to pages 12-13.

Compound information available on pages 20-37.

MWRP - Tight Tolerance Metric Guide Ring - C1000

A product of MFP Seals.

MFPSEALS®
www.mfpseals.com

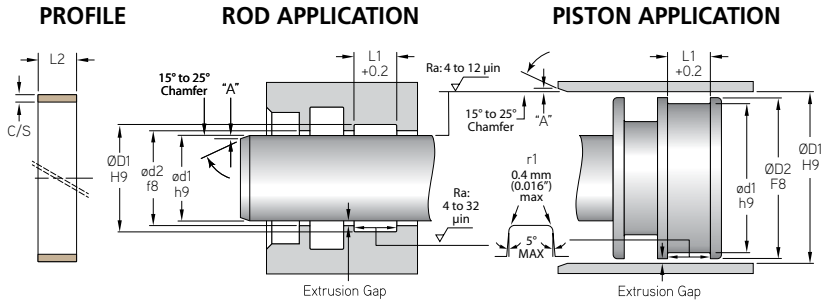

MFP PART NUMBER	ROD OR PISTON APPLICATION ØD1	ød1	L1	C/S
TOLERANCE	H9	h9	+0.2	
MWRP-160X9.7X2.5	160	155	9.7	2.5
MWRP-160X10.0X2.5	160	155	10	2.5
MWRP-160X15.0X2.5	160	155	15	2.5
MWRP-160X20.0X2.5	160	155	20	2.5
MWRP-160X24.5X2.5	160	155	24.5	2.5
MWRP-160X25.0X2.5	160	155	25	2.5
MWRP-160X50.0X2.5	160	155	50	2.5
MWRP-160X20.0X3.0	160	154	20	3
MWRP-160X10.0X3.5	160	153	10	3.5
MWRP-160X15.0X3.5	160	153	15	3.5
MWRP-160X20.0X3.5	160	153	20	3.5
MWRP-160X25.0X3.5	160	153	25	3.5
MWRP-160X30.0X3.5	160	153	30	3.5
MWRP-160X35.0X3.5	160	153	35	3.5
MWRP-160X40.0X3.5	160	153	40	3.5
MWRP-160X45.0X3.5	160	153	45	3.5
MWRP-160X35.0X4.0	160	152	35	4
MWRP-160X23.0X5.0	160	150	23	5
MWRP-160X20.0X6.0	160	148	20	6
MWRP-160X20.0X6.0	160	148	20	6
MWRP-165X7.9X2.5	165	160	7.9	2.5
MWRP-165X9.5X2.5	165	160	9.5	2.5
MWRP-165X10.0X2.5	165	160	10	2.5
MWRP-165X15.0X2.5	165	160	15	2.5
MWRP-165X20.0X2.5	165	160	20	2.5
MWRP-165X25.0X2.5	165	160	25	2.5
MWRP-165X30.0X2.5	165	160	30	2.5
MWRP-165X35.0X2.5	165	160	35	2.5
MWRP-165X40.0X2.5	165	160	40	2.5
MWRP-165X30.0X3.0	165	159	30	3
MWRP-165X15.0X3.5	165	158	15	3.5
MWRP-165X10.0X4.0	165	157	10	4
MWRP-165X15.0X4.0	165	157	15	4
MWRP-165X20.0X4.0	165	157	20	4
MWRP-165X25.0X4.0	165	157	25	4
MWRP-165X30.0X4.0	165	157	30	4
MWRP-165X35.0X4.0	165	157	35	4

Compound information available on pages 20-37.

Surface Finish: ISO 4287 & Chamfer Information on pages 7-9.
For ISO tolerance charts, refer to pages 12-13.

MFPSEALS®
www.mfpseals.com

MWRP - Tight Tolerance Metric Guide Ring - C1000

A product of MFP Seals.

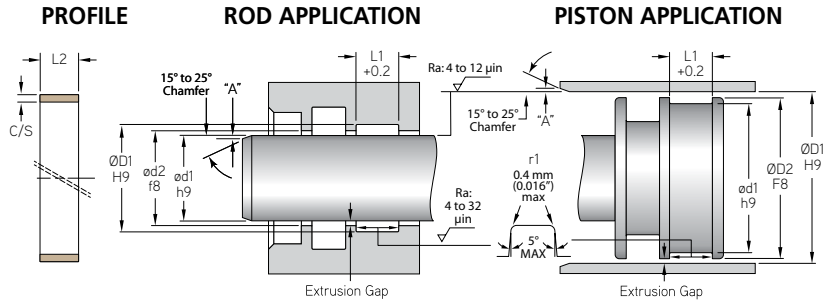

MFP PART NUMBER	ROD OR PISTON APPLICATION ØD1	ød1	L1	C/S
TOLERANCE	H9	h9	+0.2	
MWRP-165X45.0X4.0	165	157	45	4
MWRP-165X50.0X4.0	165	157	50	4
MWRP-165X19.5X6.0	165	153	19.5	6
MWRP-170X7.9X2.5	170	165	7.9	2.5
MWRP-170X8.0X2.5	170	165	8	2.5
MWRP-170X9.5X2.5	170	165	9.5	2.5
MWRP-170X9.7X2.5	170	165	9.7	2.5
MWRP-170X10.0X2.5	170	165	10	2.5
MWRP-170X15.0X2.5	170	165	15	2.5
MWRP-170X20.0X2.5	170	165	20	2.5
MWRP-170X25.0X2.5	170	165	25	2.5
MWRP-170X30.0X2.5	170	165	30	2.5
MWRP-170X35.0X2.5	170	165	35	2.5
MWRP-170X50.0X2.5	170	165	50	2.5
MWRP-170X9.5X3.0	170	164	9.5	3
MWRP-170X9.6X3.0	170	164	9.6	3
MWRP-170X20.0X3.0	170	164	20	3
MWRP-170X25.0X3.0	170	164	25	3
MWRP-170X35.0X3.0	170	164	35	3
MWRP-170X50.0X3.0	170	164	50	3
MWRP-170X14.8X3.5	170	163	14.8	3.5
MWRP-170X40.0X3.5	170	163	40	3.5
MWRP-170X45.0X3.5	170	163	45	3.5
MWRP-170X4.5X4.0	170	162	4.5	4
MWRP-170X9.6X4.0	170	162	9.6	4
MWRP-170X10.0X4.0	170	162	10	4
MWRP-170X15.0X4.0	170	162	15	4
MWRP-170X20.0X4.0	170	162	20	4
MWRP-170X25.0X4.0	170	162	25	4
MWRP-170X25.0X4.0	170	162	25	4
MWRP-170X30.0X4.0	170	162	30	4
MWRP-170X35.0X4.0	170	162	35	4
MWRP-170X40.0X4.0	170	162	40	4
MWRP-170X45.0X4.0	170	162	45	4
MWRP-170X50.0X4.0	170	162	50	4
MWRP-170X20.0X6.0	170	158	20	6
MWRP-175X9.5X2.5	175	170	9.5	2.5

Surface Finish: ISO 4287 & Chamfer Information on pages 7-9.
For ISO tolerance charts, refer to pages 12-13.

Compound information available on pages 20-37.

MWRP - Tight Tolerance Metric Guide Ring - C1000

A product of MFP Seals.

MFPSEALS®
www.mfpseals.com

PROFILE **ROD APPLICATION** **PISTON APPLICATION**

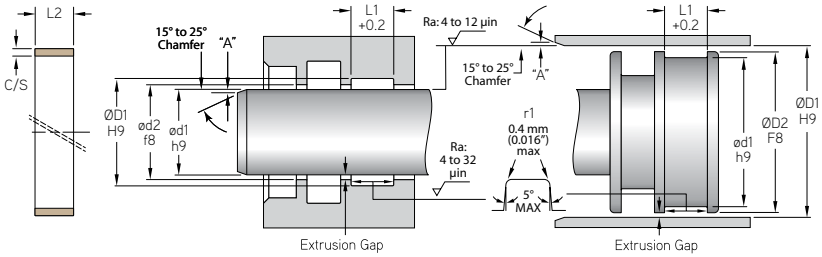

MFP PART NUMBER	ROD OR PISTON APPLICATION ØD1	ød1	L1	C/S
TOLERANCE	H9	h9	+0.2	
MWRP-175X19.8X2.5	175	170	19.8	2.5
MWRP-175X20.0X2.5	175	170	20	2.5
MWRP-175X25.0X2.5	175	170	25	2.5
MWRP-175X50.0X3.0	175	169	50	3
MWRP-175X40.0X4.0	175	167	40	4
MWRP-180X7.9X2.5	180	175	7.9	2.5
MWRP-180X8.0X2.5	180	175	8	2.5
MWRP-180X9.5X2.5	180	175	9.5	2.5
MWRP-180X10.0X2.5	180	175	10	2.5
MWRP-180X12.0X2.5	180	175	12	2.5
MWRP-180X12.5X2.5	180	175	12.5	2.5
MWRP-180X15.0X2.5	180	175	15	2.5
MWRP-180X20.0X2.5	180	175	20	2.5
MWRP-180X25.0X2.5	180	175	25	2.5
MWRP-180X30.0X2.5	180	175	30	2.5
MWRP-180X35.0X2.5	180	175	35	2.5
MWRP-180X40.0X2.5	180	175	40	2.5
MWRP-180X45.0X2.5	180	175	45	2.5
MWRP-180X50.0X2.5	180	175	50	2.5
MWRP-180X14.8X3.0	180	174	14.8	3
MWRP-180X20.0X3.0	180	174	20	3
MWRP-180X35.0X3.0	180	174	35	3
MWRP-180X50.0X3.0	180	174	50	3
MWRP-180X14.8X3.5	180	173	14.8	3.5
MWRP-180X20.0X3.5	180	173	20	3.5
MWRP-180X50.0X3.5	180	173	50	3.5
MWRP-180X9.5X4.0	180	172	9.5	4
MWRP-180X9.6X4.0	180	172	9.6	4
MWRP-180X10.0X4.0	180	172	10	4
MWRP-180X12.0X4.0	180	172	12	4
MWRP-180X15.0X4.0	180	172	15	4
MWRP-180X20.0X4.0	180	172	20	4
MWRP-180X22.0X4.0	180	172	22	4
MWRP-180X22.5X4.0	180	172	22.5	4
MWRP-180X25.0X4.0	180	172	25	4
MWRP-180X30.0X4.0	180	172	30	4
MWRP-180X35.0X4.0	180	172	35	4

Compound information available on pages 20-37.

Surface Finish: ISO 4287 & Chamfer Information on pages 7-9.
For ISO tolerance charts, refer to pages 12-13.

MFPSEALS®
www.mfpseals.com

MWRP - Tight Tolerance Metric Guide Ring - C1000

A product of MFP Seals.

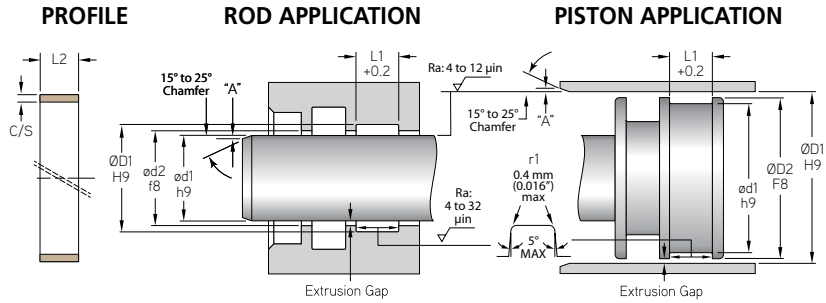

MFP PART NUMBER	ROD OR PISTON APPLICATION ØD1	ød1	L1	C/S
TOLERANCE	H9	h9	+0.2	
MWRP-180X40.0X4.0	180	172	40	4
MWRP-180X45.0X4.0	180	172	45	4
MWRP-180X50.0X4.0	180	172	50	4
MWRP-180X55.0X4.0	180	172	55	4
MWRP-180X8.0X5.0	180	170	8	5
MWRP-180X19.0X5.0	180	170	19	5
MWRP-180X25.0X5.0	180	170	25	5
MWRP-180X22.5X6.0	180	168	22.5	6
MWRP-185X15.0X2.5	185	180	15	2.5
MWRP-185X25.0X2.5	185	180	25	2.5
MWRP-185X50.0X2.5	185	180	50	2.5
MWRP-185X15.0X4.0	185	177	15	4
MWRP-185X22.5X6.0	185	173	22.5	6
MWRP-190X8.0X2.5	190	185	8	2.5
MWRP-190X9.5X2.5	190	185	9.5	2.5
MWRP-190X10.0X2.5	190	185	10	2.5
MWRP-190X15.0X2.5	190	185	15	2.5
MWRP-190X25.0X2.5	190	185	25	2.5
MWRP-190X30.0X2.5	190	185	30	2.5
MWRP-190X14.8X3.0	190	184	14.8	3
MWRP-190X50.0X3.0	190	184	50	3
MWRP-190X30.0X3.5	190	183	30	3.5
MWRP-190X35.0X3.5	190	183	35	3.5
MWRP-190X9.6X4.0	190	182	9.6	4
MWRP-190X10.0X4.0	190	182	10	4
MWRP-190X15.0X4.0	190	182	15	4
MWRP-190X20.0X4.0	190	182	20	4
MWRP-190X22.0X4.0	190	182	22	4
MWRP-190X22.5X4.0	190	182	22.5	4
MWRP-190X25.0X4.0	190	182	25	4
MWRP-190X30.0X4.0	190	182	30	4
MWRP-190X35.0X4.0	190	182	35	4
MWRP-190X45.0X4.0	190	182	45	4
MWRP-190X50.0X4.0	190	182	50	4
MWRP-190X19.0X5.0	190	180	19	5
MWRP-190X38.0X6.5	190	177	38	6.5
MWRP-195X10.0X2.5	195	190	10	2.5

Surface Finish: ISO 4287 & Chamfer Information on pages 7-9.
For ISO tolerance charts, refer to pages 12-13.

Compound information available on pages 20-37.

MWRP - Tight Tolerance Metric Guide Ring - C1000

A product of MFP Seals.

MFPSEALS®
www.mfpseals.com

PROFILE **ROD APPLICATION** **PISTON APPLICATION**

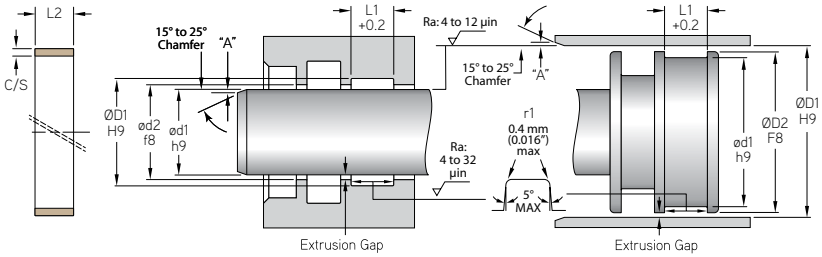

MFP PART NUMBER	ROD OR PISTON APPLICATION ØD1	ød1	L1	C/S
TOLERANCE	H9	h9	+0.2	
MWRP-195X15.0X2.5	195	190	15	2.5
MWRP-195X20.0X2.5	195	190	20	2.5
MWRP-195X25.0X2.5	195	190	25	2.5
MWRP-195X30.0X2.5	195	190	30	2.5
MWRP-200X9.7X2.5	200	195	9.7	2.5
MWRP-200X14.8X2.5	200	195	14.8	2.5
MWRP-200X14.8X3.0	200	194	14.8	3
MWRP-200X19.5X3.0	200	194	19.5	3
MWRP-200X19.8X3.0	200	194	19.8	3
MWRP-200X9.6X4.0	200	192	9.6	4
MWRP-200X10.0X4.0	200	192	10	4
MWRP-200X15.0X4.0	200	192	15	4
MWRP-200X20.0X4.0	200	192	20	4
MWRP-200X22.0X4.0	200	192	22	4
MWRP-200X22.5X4.0	200	192	22.5	4
MWRP-200X25.0X4.0	200	192	25	4
MWRP-200X28.0X4.0	200	192	28	4
MWRP-200X30.0X4.0	200	192	30	4
MWRP-200X40.0X4.0	200	192	40	4
MWRP-200X44.8X4.0	200	192	44.8	4
MWRP-200X45.0X4.0	200	192	45	4
MWRP-200X50.0X4.0	200	192	50	4
MWRP-200X90.0X4.0	200	192	90	4
MWRP-200X22.5X6.0	200	188	22.5	6
MWRP-200X90.0X6.0	200	188	90	6
MWRP-205X120.0X2.5	205	200	120	2.5
MWRP-210X9.7X2.5	210	205	9.7	2.5
MWRP-210X15.0X2.5	210	205	15	2.5
MWRP-215X19.8X3.0	215	209	19.8	3
MWRP-215X9.6X4.0	215	207	9.6	4
MWRP-220X120.0X6.0	220	208	120	6
MWRP-225X25.0X4.0	225	217	25	4
MWRP-225X50.0X4.0	225	217	50	4
MWRP-225X25.0X6.0	225	213	25	6
MWRP-225X25.0X6.5	225	212	25	6.5
MWRP-230X24.8X2.5	230	225	24.8	2.5
MWRP-230X24.8X3.0	230	224	24.8	3

Compound information available on pages 20-37.

Surface Finish: ISO 4287 & Chamfer Information on pages 7-9.
For ISO tolerance charts, refer to pages 12-13.

MFPSEALS®
www.mfpseals.com

MWRP - Tight Tolerance Metric Guide Ring - C1000

A product of MFP Seals.

PROFILE **ROD APPLICATION** **PISTON APPLICATION**

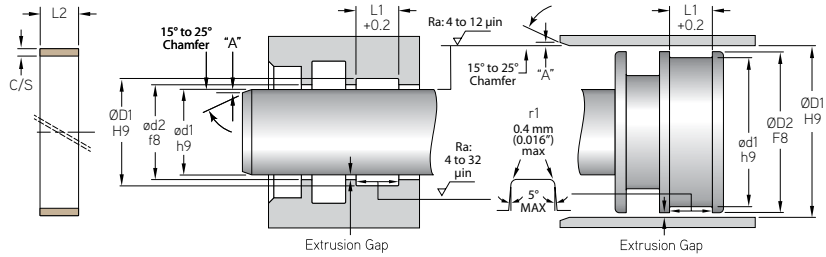

MFP PART NUMBER	ROD OR PISTON APPLICATION ØD1	ød1	L1	C/S
TOLERANCE	H9	h9	+0.2	
MWRP-230X14.8X4.0	230	222	14.8	4
MWRP-230X40.0X4.5	230	221	40	4.5
MWRP-240X25.0X2.5	240	235	25	2.5
MWRP-240X24.8X3.0	240	234	24.8	3
MWRP-240X24.8X3.5	240	233	24.8	3.5
MWRP-240X28.4X3.5	240	233	28.4	3.5
MWRP-240X15.0X4.0	240	232	15	4
MWRP-240X24.8X6.3	240	227.4	24.8	6.3
MWRP-250X14.8X2.5	250	245	14.8	2.5
MWRP-250X55.0X4.0	250	242	55	4
MWRP-250X27.0X6.0	250	238	27	6
MWRP-250X129.5X6.0	250	238	129.5	6
MWRP-255X38.0X6.5	255	242	38	6.5
MWRP-260X9.6X2.5	260	255	9.6	2.5
MWRP-260X14.8X3.0	260	254	14.8	3
MWRP-260X29.8X3.0	260	254	29.8	3
MWRP-260X14.8X4.0	260	252	14.8	4
MWRP-260X27.5X6.0	260	248	27.5	6
MWRP-280X25.0X2.5	280	275	25	2.5
MWRP-280X29.5X3.0	280	274	29.5	3
MWRP-280X30.0X4.0	280	272	30	4
MWRP-280X30.0X6.0	280	268	30	6
MWRP-285X25.0X2.5	285	280	25	2.5
MWRP-300X60.0X4.0	300	292	60	4
MWRP-300X29.6X6.0	300	288	29.6	6
MWRP-310X34.2X3.0	310	304	34.2	3
MWRP-310X19.8X3.5	310	303	19.8	3.5
MWRP-320X14.0X3.5	320	313	14	3.5
MWRP-320X70.0X4.0	320	312	70	4

Surface Finish: ISO 4287 & Chamfer Information on pages 7-9.
For ISO tolerance charts, refer to pages 12-13.

Compound information available on pages 20-37.

MXS - Metric XS Seal® - Spring Energized Seals

A product of MFP Seals.

MFPSEALS®
www.mfpseals.com

MXS - METRIC XS SEAL® SPRING ENERGIZED SEALS

MFP Seals produces a full range of Spring Energized Seals for applications that present challenges to conventional seal designs, no matter what media will be encountered. Common uses for our XS Seal® line, range from Explosive Decompression Resistant applications or AED seals, to Extreme Temperatures, High Surface Speeds, Non-Lubricated Systems, Extreme Pressures, Vacuum, and so much more!

With 33 standard profiles, plus the ability to create custom designs, MFP Seals has an XS Seal® that is designed to fit your application. Our engineers will match the various spring types such as Helical, Slanted Coil, and V, to your intended use, made from a material that is perfect for the job. Our Spring Energizers are available in Stainless Steel, Hastelloy, Elgiloy, and other Alloys. Contact your MFP Seals sales representative to get your Spring Energized Seal design started today.

MFP PART NUMBER

MXSDA20-050-075-20.0T5100E

SEAL TYPE | PROFILE | SPRING STYLE | ID LIP | OD LIP | ID | OD | HEIGHT | JACKET COMPOUND | SPRING MATERIAL

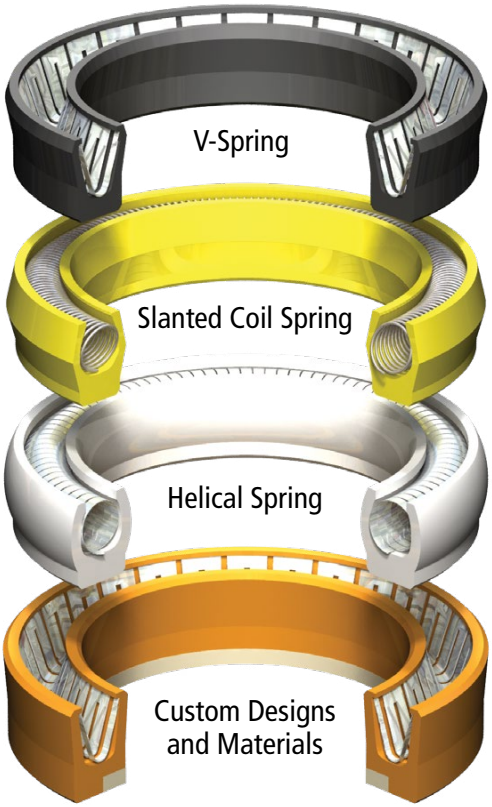

Custom Designs and Materials are available. Please contact your MFP Seals Sales Representative for more details.

V SPRING ENERGIZED SEALS

MFP Seals V-Spring Loaded Seals are a cantilever beam design that is applied as a radial or axial compression energizer for a U-Cup style seal. The V-Spring provides a moderate load over a wide deflection range and is used in dynamic and static seal applications.

SLANTED COIL SPRING ENERGIZED SEALS

MFP Seals Slanted Coil Spring Loaded Seals produce a very flat load curve when compressed. The Slanted Coil Spring is designed for use in U-Cup seals, as well as other configurations, when a constant predictable load over a wide deflection range is desired. These Slanted Coil Spring Seals are available in light, medium and heavy load designs as well as being offered with gold, silver and nickel plating for use in Electronic and Semiconductor applications.

HELICAL SPRING ENERGIZED SEALS

MFP Seals Helical Spring Loaded Seals are made from a flat ribbon and wound into a round cross section helix geometry. The Helical Spring is designed for use in U-Cup style seals, as well as other configurations, for radial or axial compression energized seals and produces a very high unit load over a small deflection range. The Helical Spring Loaded Seal is usually used in static or slow dynamic applications and often for extremely low temperatures.

Compound information available on pages 20-37.

Surface Finish: ISO 4287 & Chamfer Information on pages 7-9.
For ISO tolerance charts, refer to pages 12-13.

XS SEAL® SPRING ENERGIZED SEAL PART NUMBER NOMENCLATURE - METRIC SIZES

MXS D A 2 0 - 050 x 075 x 20.0 T5100E

SEAL TYPE

ød1 (ID)
Examples:
005 = 5 mm
050 = 50 mm
075 = 75 mm
100 = 100 mm

L2 (HEIGHT)
Examples:
10.0 = 10.0 mm
20.0 = 20.0 mm
25.5 = 25.5 mm
40.0 = 40.0 mm

OD Lip
0 - Same as ID
1 - Radius
2 - Scraper
3 - Double Bump
4 - Chamfered
5 - Multi Lip
6 - N/A

ØD1 (OD)
Examples:
015 = 15 mm
075 = 75 mm
100 = 100 mm
125 = 125 mm

Jacket Compound
For compound descriptions and temperature ranges, please refer to page 26.
Not available in all compounds.

ID Lip
1 - Radius
2 - Scraper
3 - Double Bump
4 - Chamfered
5 - Multi Lip
6 - N/A

Spring Material
E - Elgiloy
H - Hastelloy
S - Stainless Steel

Other materials available.

Spring Style
A - V
B - Helical
C - Slanted Coil - Light Duty
D - Slanted Coil - Med. Duty
E - Slanted Coil - Heavy Duty

Profile
D - Standard
E - External
F - Flanged
H - O-Ring in Heel
I - Internal
Q - O-Ring Center

MFP XS SEAL® SPRING ENERGIZED SEAL PROFILES

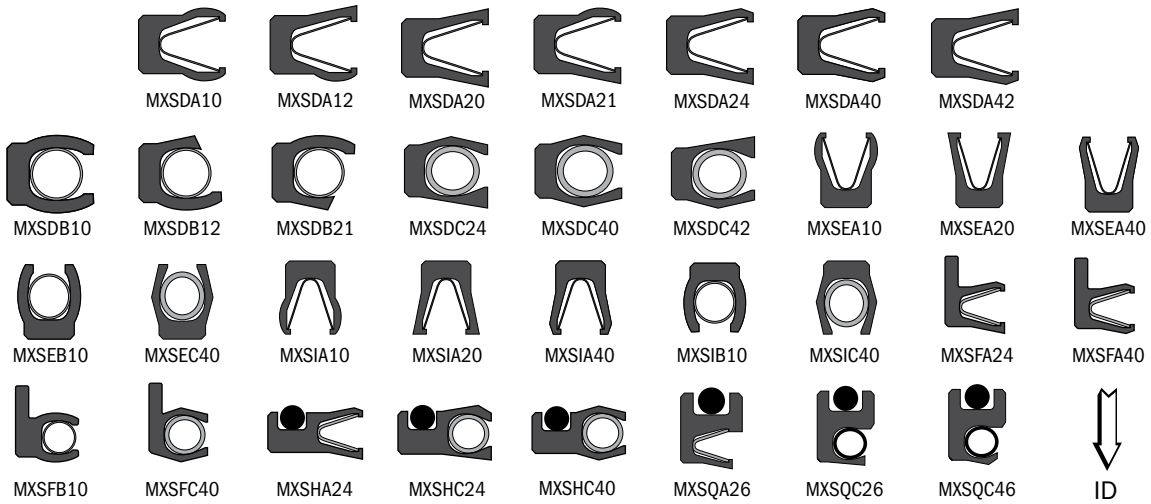

Surface Finish: ISO 4287 & Chamfer Information on pages 7-9.
For ISO tolerance charts, refer to pages 12-13.

Compound information available on pages 20-37.

MFPSEALS®
www.mfpseals.com

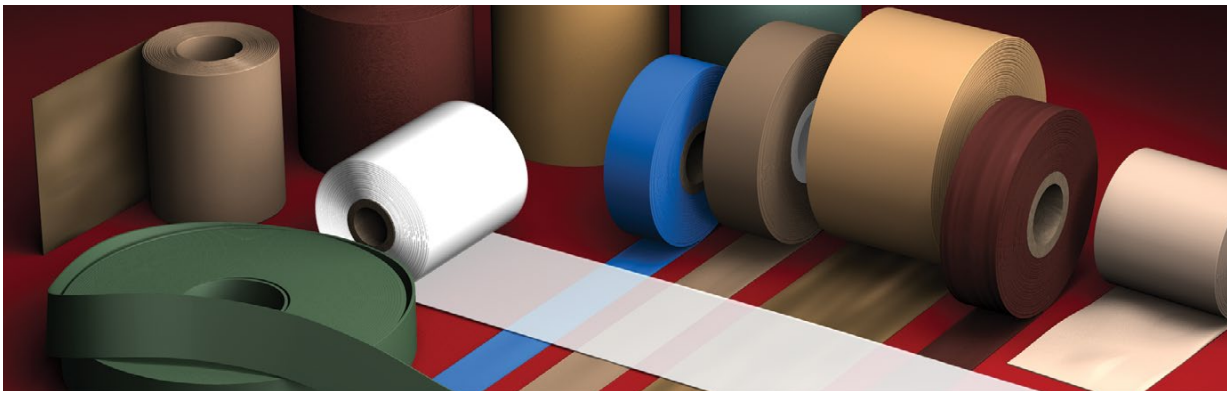

PTFE SKIVED TAPE

ETCHED & UNETCHED

MFP Seals has the know-how to make the best quality skived PTFE products on the market today. Our skived material can be produced from 0.002" up to 0.250" thick, in widths from 0.5" up to 60", made with the most up-to-date skiving technologies, and premium selection of raw materials. Our skived tapes can also be made to the standards of the Aerospace and Electronics Industries.

T1000 (Virgin PTFE)

Property	Unit	Method	Typical Value Extruded	Typical Value Molded
Density	g/cm3	ASTM D792	2.14 - 2.18	
Tensile Strength	N/mm2	ASTM D4894	≥ 20	≥ 24
Elongation at Break	%	ASTM D4894	≥ 200	≥ 250
Compressive Strength at 1% Deformation	N/mm2	ASTM D695	4 - 5	
Coefficient of Friction (Dynamic)	–	ASTM D1894	0.06	
Service Temperature (Min - Max)	°C (°F)	–	-200 to +260 (-328 to +500)	
Dielectric Strength in Air	kV/mm	ASTM D149	≥ 20	≥ 40

T4000 (PTFE)

Property	Unit	Method	Typical Value Extruded	Typical Value Molded
Density	g/cm^3	ASTM D792	2.13 - 2.20	
Tensile Strength	N/mm^2	ASTM D1708	≥ 13	≥ 13
Elongation at Break	%	ASTM D1708	≥ 100	≥ 150
Compressive Strength at 1% Deformation	N/mm^2	ASTM D695	2 - 4	
Coefficient of Friction (Dynamic)	–	ASTM D1894	0.06	
Service Temperature (Min - Max)	°C (°F)	–	-200 to +260 (-328 to +500	
Dielectric Strength in Air	kV/mm	ASTM D149	≥ 20	≥ 40

Available in T1000 (virgin PTFE), standard PTFE, and filled PTFE compounds, such as, bronze, carbon, glass fiber, or other special materials, we have a Skived Tape to fit your application. The special fillers and the technology used to process etch compounded tapes can enhance certain properties, and lower the co-efficient of friction, increase hardness, wear strength, and high temperature resistance, increase pressure resistance, and wear resistance (longevity), resulting in lowered operating costs.

MFP Seals produces Skived tapes that are Etched or Unetched. Skived Tapes that have undergone the etching treatment process can adhere to adhesives, allowing them to be bonded to plastic, metal and rubber surfaces. The etching process will turn the treated surface of the PTFE to a Brown or Burgundy color.

Skived Tape is commonly used in: Machine Centers: Milling, Drilling and Grinding Machines; Lathes, Saws and Skids; Bridge Supports, Construction Engineering, and Maintenance Applications.

PTFE - Skived Tape

Thickness	Tolerance
0.025"	+ 0.0014"
0.031" (1/32")	+ 0.0015"
0.062" (1/16")	+ 0.0039"
0.093" (3/32")	+ 0.0079"
0.125" (1/8")	+ 0.0120"
0.187" (3/16")	+ 0.0160"
0.250" (1/4")	+ 0.0200"

T1000 (Virgin PTFE) - Skived Tape

Thickness	Tolerance
0.002"	+ 0.0004"
0.003"	+ 0.0004"
0.004"	+ 0.0004"
0.005"	+ 0.0004"
0.008"	+ 0.0007"
0.010"	+ 0.0008"
0.015"	+ 0.0012"
0.020"	+ 0.0013"

Thickness	Tolerance
0.025"	+ 0.0014"
0.031" (1/32")	+ 0.0015"
0.062" (1/16")	+ 0.0039"
0.093" (3/32")	+ 0.0079"
0.125" (1/8")	+ 0.0120"
0.187" (3/16")	+ 0.0160"
0.250" (1/4")	+ 0.0200"

PROMOTIONAL MEDIA

MFPSEALS®
www.mfpseals.com

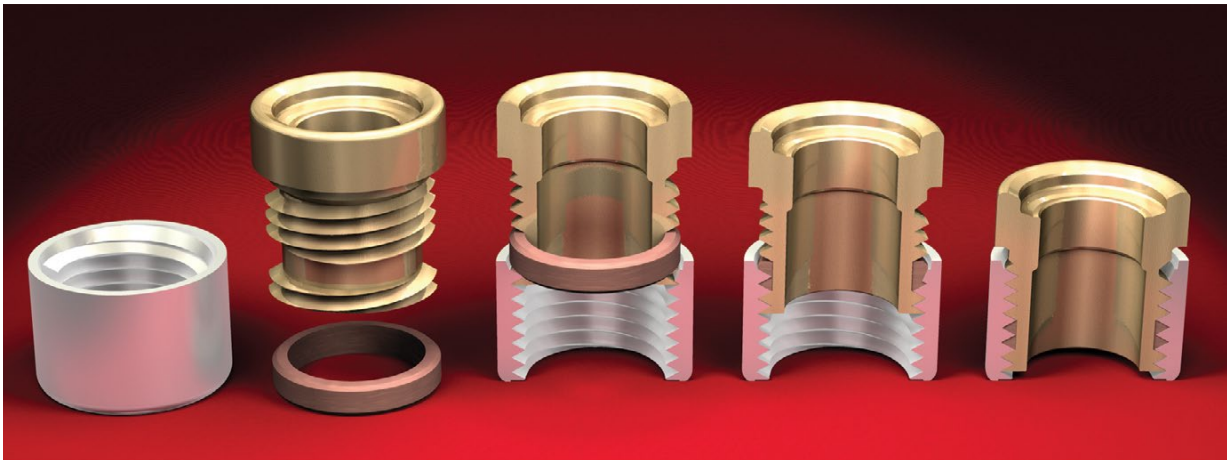

THREAD SEALS

MFP Seals' Ring Style Thread Seals were developed and tested extensively in the field. Our thread seals outperform traditional thread sealant tapes because of their robust design and method of application.

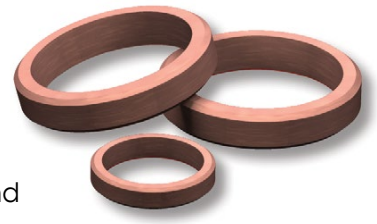

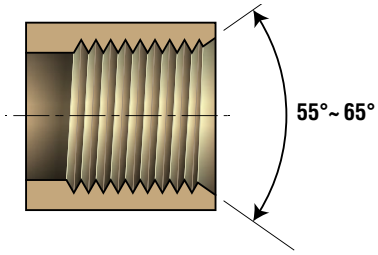

Utilizing a proprietary PTFE blend, specifically developed for this application, coupled with a machined groove, our method ensures the thread channel is sealed completely. Thread sealant tapes can tear and stretch, leaving voids where leaks can occur. Contact MFP Seals today to order the best thread seal available today.

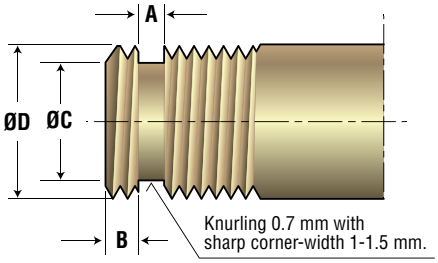

THREAD SEALS provide:

- Maximum sealing of the thread channel.
- Specialized PTFE material easily expands for positioning over threads and into seal groove, then shrinks back to original size and is ready for assembly.
- Tested and proven thread sealing for hydraulic applications.

Customized sizes available upon request.

A wide selection of standard sizes are available in stock:

1/4″ : 12.2 x 9.4 x 3.6 mm
3/8″ : 15.3 x 12 x 3.6 mm
1/2″ : 19.3 x 16 x 3.6 mm
3/4″ : 24.3 x 21 x 3.6 mm
1″ : 30.7 x 26.5 x 4.3 mm

Dimension of the groove:

ØD Thread	ØC Before Knurling (mm)	B Minimum (mm)	A (mm)
R 1-1/2″	$43.6^{+0.2}$	4.5	$4.6^{+0.1}$
R 1-1/4″	$37.6^{+0.2}$	4.5	$4.6^{+0.1}$
R 1″	$29.1^{+0.1}$	4.5	$4.6^{+0.1}$
R 3/4″	$23.1^{+0.1}$	3.5	$3.7^{+0.1}$
R 1/2″	$17.6^{+0.1}$	3.5	$3.7^{+0.1}$
R 3/8″	$13.9^{+0.1}$	3.5	$3.7^{+0.1}$
R 1/4″	$10.4^{+0.1}$	3.5	$3.7^{+0.1}$

PROMOTIONAL MEDIA

MFPSEALS®
www.mfpseals.com

PTFE ETCHING

Both Virgin PTFE and Filled PTFE products can be etched in preparation for bonding.

PROMOTIONAL MEDIA

Fluoropolymers are the ideal choice for applications in chemical processing, pharmaceutical, and electronics industries due to their chemical, heat, and weather resistance, durability, flexibility, and dielectric properties. However, these outstanding physical properties, also make them resistant to most bonding agents. Their smooth atomic structures do not provide a surface conducive to adhesion.

MFP Seals offers etching services, for whole or partial surfaces, of Rings, Bushings, and other PTFE products that we produce. In general, etching changes the physical structure of the top layer of the fluoropolymer through a chemical reaction, which extracts fluorine atoms, only affecting it to a depth of a few angstroms. This chemical reaction forms a layer (identifiable by its brown color), which readily accepts most adhesives, making the fluoropolymer bondable to itself, or other materials.

Sheets and skived tapes, etched on one or two sides, are available in the following standard sizes.

Sheets:

Thickness:	1.5 mm (min.)	- 100 mm (max.)
Sizes (mm):	600 x 600	1000 x 1000
	1200 x 1200	1500 x 1500

Skived Tapes:

Thickness:	0.020 mm (min.) - 4 mm (max.)
Width:	300 mm (min.) - 1500 mm (max.)

Etching Quality: MFP Seals is able to guarantee the quality of the etching by maintaining strict control over the etching process and through evaluation of the etching itself through wettability testing (Contact Angle Method), and an adhesion test (ref. ASTM D903).

Contact Angle Method: Based on the measure of the angle between the tangent to a distilled water drop and the PTFE surface (i.e. the contact angle).

Figure 1: shows two examples of the contact angle method, one on an un-etched surface (poor wetting) and one on an etched surface (good wetting).

Figure 2: shows how the contact angle can determine the effectiveness of the etching.

Figure 1

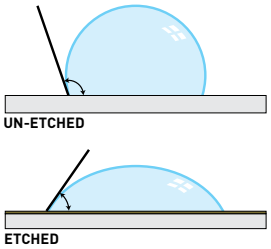

Figure 2

Contact Angle	Degree of Etching
20° - 45°	Excellent
46° - 60°	Fair
>60°	Poor

Figure 3: shows contact angle vs. surface energy. Contact angle and surface energy of etched PTFE are related by the following formula:

$$Es = 72 + \frac{\cos\theta - 1}{0.025}$$

Es = Surface Energy (dynes/cm)
θ = Contact Angle (degrees)

Figure 3

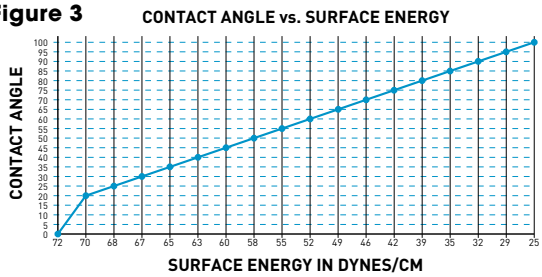

MFPSEALS®
www.mfpseals.com

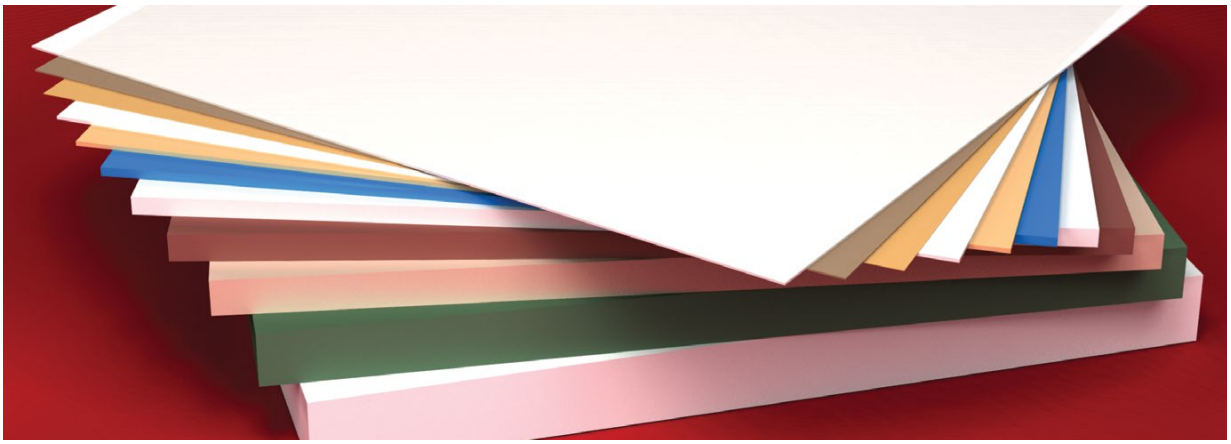

PTFE SHEETS

ETCHED OR UNETCHED

MFP Seals has the knowledge to make the best quality, skived or molded, virgin or compounded PTFE sheets on the market today. Our molded sheets can be made from 0.187″ (3/16″) up to 4.000″ thick, in sheets that are 36″ or 48″ square (see chart). Our skived sheets are available from 0.031″ (1/32″) up to 0.25″ (1/4″) thick, in sheets that are 36″, 48″ or 60″ square.

PTFE sheets can be etched on one, or both sides (if required), to allow them to be bonded to other surfaces, such as plastic, metal and rubber. The etching process will turn the treated surface of the PTFE to a Brown or Burgundy color.

Our sheets are available in T1000 (Virgin PTFE) and a variety of blended compounds, meaning that we have a PTFE Sheet to fit your application. The special fillers can enhance certain properties, and may lower the coefficient of friction, increase hardness, wear strength, and high temperature resistance, increase pressure resistance, and wear resistance (longevity), resulting in lowered operating costs.

In order to ensure fast and efficient ordering and delivery, MFP Seals stocks a wide range of molded and skived sheets, in different thicknesses and dimensions.

Molded Sheets

Thickness	Tolerance	Size	Tolerance
0.187" (3/16")	+ 0.050"	48" x 48"	(+1.57″, -0″)
0.250" (1/4")	+ 0.050"	48" x 48"	(+1.57″, -0″)
0.375" (3/8")	+ 0.059"	48" x 48" - 36"x36"	(+1.57″, -0″)
0.500" (1/2")	+ 0.075"	48" x 48" - 36"x36"	(+1.57″, -0″)
0.625" (5/8")	+ 0.094"	48" x 48" - 36"x36"	(+1.57″, -0″)
0.750" (3/4")	+ 0.112"	48" x 48" - 36"x36"	(+1.57″, -0″)
0.875" (7/8")	+ 0.115"	48" x 48" - 36"x36"	(+1.57″, -0″)
1.000"	+ 0.115"	48" x 48" - 36"x36"	(+1.57″, -0″)
1.250" (1-1/4")	+ 0.118"	48" x 48" - 36"x36"	(+1.57″, -0″)
1.500" (1-1/2")	+ 0.118"	48" x 48" - 36"x36"	(+1.57″, -0″)
1.625" (1-5/8")	+ 0.118"	48" x 48" - 36"x36"	(+1.57″, -0″)
1.750" (1-3/4")	+ 0.118"	48" x 48" - 36"x36"	(+1.57″, -0″)
1.875" (1-7/8")	+ 0.118"	48" x 48" - 36"x36"	(+1.57″, -0″)
2.000"	+ 0.118"	48" x 48" - 36"x36"	(+1.57″, -0″)
2.250" (2-1/4")	+ 0.118"	48" x 48" - 36"x36"	(+1.57″, -0″)
2.500" (2-1/2")	+ 0.118"	48" x 48" - 36"x36"	(+1.57″, -0″)
2.750" (2-3/4")	+ 0.118"	48" x 48" - 36"x36"	(+1.57″, -0″)
3.000"	+ 0.118"	48" x 48" - 36"x36"	(+1.57″, -0″)
3.500" (3-1/2")	+ 0.197"	48" x 48"	(+1.57″, -0″)
4.000"	+ 0.197"	48" x 48"	(+1.57″, -0″)

Skived Sheets

Thickness	Tolerance	Size	Tolerance
0.031″ (1/32″)	+ 0.0012″	48″x48″ / 36″x36″ / 60″x60″	(+1.57″, -0″)
0.062″ (1/16″)	+ 0.0039″	48″x48″ / 36″x36″ / 60″x60″	(+1.57″, -0″)
0.093″ (3/32″)	+ 0.0079″	48″x48″ / 36″x36″ / 60″x60″	(+1.57″, -0″)
0.125″ (1/8″)	+ 0.0120″	48″x48″ / 36″x36″ / 60″x60″	(+1.57″, -0″)
0.187″ (3/16″)	+ 0.0160″	48″x48″ / 36″x36″ / 60″x60″	(+1.57″, -0″)
0.250″ (1/4″)	+ 0.0200″	48″x48″ / 36″x36″ / 60″x60″	(+1.57″, -0″)

Our PTFE products can be partially or fully etched to allow bonding to other surfaces.

MFPSEALS®
www.mfpseals.com

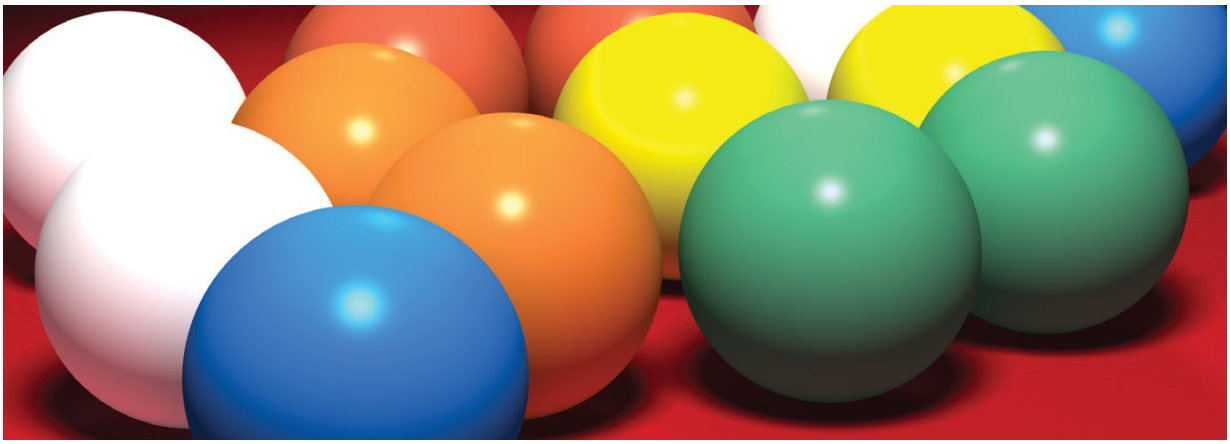

PTFE BALLS

PROMOTIONAL MEDIA

MFP Seals produces solid PTFE balls in a range of sizes, colors, and PTFE materials (Polytetrafluoroethylene), including our T1000 (Virgin PTFE).

The Virgin PTFE ball is a unique, low friction product, inert to most liquids and corrosives, and is non-contaminating, making it the ideal material for use in applications where metals and alloys would corrode quickly. Capable of withstanding temperatures from -328°F up to +500°F, Virgin PTFE can handle an extremely wide range of environments and is often used in high temperature applications, and others, including, column packing, check, relief & float type ball valves, carburetors and switches, and can also be used as light load ball bearings, or as mixing beads. PTFE balls (in their natural state) are heavier than water.

T1000 (Virgin PTFE)			
Properties	**Unit**	**Method**	**Typical Value**
PHYSICAL - MECHANICAL			
Density	g/cm³	ASTM D792	2.14 - 2.18
Hardness - Shore D	points	ASTM D2240	51 - 60
Tensile strength - CD	MPa	ISO 527	≥ 20
Elongation at break - CD	%	ISO 527	>200
Compressive strength at 1% deformation - CD	psi	ASTM D695	580 - 725
Deformation under load at room temperature after 24 hours at 13.7 N/mm² - CD	%	ASTM D621	14 - 17
Permanent deformation as above after 24 hours of rest at room temperature - CD	%	ASTM D621	7 - 8
Deformation under load at 260°C, after 24 hours at 41 N/mm² - CD	%	ASTM D621	
Permanent deformation as above after 24 hours of rest at room temperature - CD	%	ASTM D621	7 - 8
Impact strength Izod	J/m	ASTM D256	153
TRIBIOLOGICAL			
Dynamic coefficient of friction	/	ASTM D1894 ASTM D3702	0.06
Wear factor K	/	ASTM D3702	2.900
PV limit at 3 m/min at 30 m/min at 300 m/min	N/mm²• m/min	/	2.4 4.2 5.7
THERMAL			
Service Temperature (min - max)	°F	/	-328 / +500
Thermal expansion coefficient (linear) 25 - 100°C	10^{-5}in/in/°F	ASTM D696	6.625 - 7.206
ELECTRICAL			
Dielectric strength (specimen 0.5 mm thick)	KV/mm	ASTM D149	≥ 40
Dielectric Constant at 60 Hz and 106 Hz	/	ASTM D150	2.05 - 2.10
Volume Resistivity	Ω • cm	ASTM D257	10^{18}
Surface Resistivity	Ω	ASTM D257	10^{17}

CD = Cross Direction; The data we are herewith providing are all based on laboratory testing and are proposed to technical designers as possible and useful advice. Deviations from the values indicated may occur, but they do not constitute themselves either detriment of quality or reason for rejection.

While Virgin PTFE balls are White or Off-White in color, they can also be made from blended materials, such as 50% Stainless Steel filled, glass filled, bronze, etc. Adding a filler will generally color the ball to match the filler, but other custom colors can be achieved. Colored balls are useful for color coding purposes and can help identify the balls used in your production line. You must request custom colors prior to fabrication. Certain fillers or colors may affect the physical properties of the ball. Please inform us if testing of a certain blend is required.

Whether you're looking for virgin PTFE balls or custom blended compounds & colors, give MFP Seals a call and we can design and produce a solution for your application.

MFPSEALS®
www.mfpseals.com

PTFE SPACERS

Custom Manufactured For Your Application

MFP Seals' PTFE SPACERS, a product line of over 140 standard profiles, are designed to exceed your expectations and meet the quality standards of your application. MFP Seals manufactures PTFE Spacers utilizing state-of-the-art tools. Specializing in PTFE Spacers with sizes ranging from 1/4" to 48" (6 mm to 1,220 mm).

CONTACT MFP SEALS TO ORDER YOUR PTFE SPACERS TODAY!

MFP Seals' PTFE SPACERS product line includes:

Ring & Full Face Spacers: Standard, Blind, Armored (Steel Reinforcement - Outer Ring) Orifice (Drill thru & NPT Tap)
Tapered Spacers: Single, Double, and Tapered Bore
Other Spacers: Flanges, Paddle Spacers

Material Facts
T1000 (Virgin PTFE)

Properties	Method	Typical Value
PHYSICAL - MECHANICAL		
Density (g/cm³)	ASTM D792	2.14 - 2.18
Hardness Shore D (points)	ASTM D2240	51 - 60
Tensile Strength CD (MPa)	ISO 527	≥ 20
Elongation at Break CD (%)	ISO 527	>200
Compressive Strength at 1% deformation CD (psi)	ASTM D695	580 - 725
Deformation under load at room temp. after 24 hours at 13.7 N/mm² CD (%)	ASTM D621	14 - 17
Permanent deformation as above after 24 hours of rest at room temp. CD (%)	ASTM D621	7 - 8
Permanent deformation as above after 24 hours of rest at room temp. CD (%)	ASTM D621	7 - 8
Impact strength Izod (J/m)	ASTM D256	153
TRIBIOLOGICAL		
Dynamic Coefficient of Friction	ASTM D1894 ASTM D3702	0.06
Wear factor K	ASTM D3702	2.900
PV limit at 3 m/min		2.4
at 30 m/min	N/mm²· m/min	4.2
at 300 m/min		5.7
THERMAL		
Service Temperature (min to max)	°C	-200 to +260
	°F	-328 to +500
Thermal expansion coefficient (linear) 25 - 100°C (10-5in/in/°F)	ASTM D696	6.625 - 7.206
ELECTRICAL		
Dielectric Strength (specimen 0.5 mm thick) (KV/mm)	ASTM D149	≥ 40
Dielectric Constant at 60 Hz and 106 Hz	ASTM D150	2.05 - 2.10
Volume Resistivity (Ω · cm)	ASTM D257	1018
Surface Resistivity (Ω)	ASTM D257	1017

CD = Cross Direction

Custom sizes and configurations are also available.

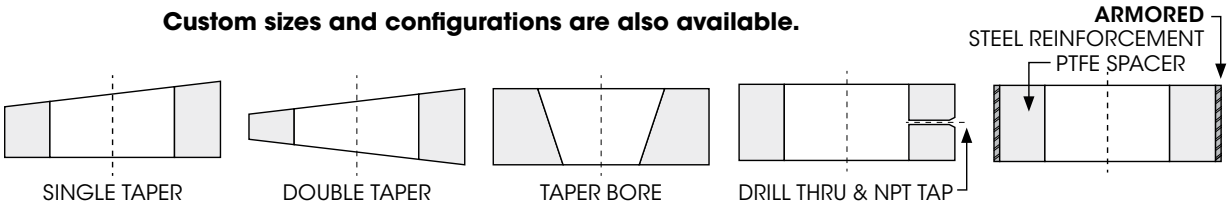

The data we are herewith providing are all based on laboratory testing and are proposed to technical designers as possible and useful advice. Deviations from the values indicated may occur, but they do not constitute themselves either detriment of quality or reason for rejection.

For more information or to order contact MFP Seals.

PROMOTIONAL MEDIA

MFPSEALS®
www.mfpseals.com

PTFE LANTERN RINGS

MFP Seals produces a variety of machined Virgin and Filled PTFE Lantern Rings. Designed for use in applications such as Centrifugal, Turbine, Boiler, Feed, and Condensate Return Pumps; Wastewater, Slurry, Sludge, Pulp, Paper Stock, as well as, Positive Displacement Pumps, Agitators, Mixers, and more.

PTFE Lantern Rings are a low friction product, inert to most liquids & corrosives, and is also non-contaminating, making it the ideal material in applications where metals and alloys would corrode quickly. The PTFE Lantern Rings will not score pump shafts or sleeves.

The Lantern Ring ensure the packing is kept cool, lubricated, and flushed of abrasives and chemicals. The use of a Lantern Ring has proven to increase the longevity of compression packings, reducing maintenance and downtime of equipment. To ensure easy installation, they can be made as solid, split or half rings, in Inch or Metric sizes.

Capable of withstanding extreme temps, from -328°F up to +500°F, PTFE can handle harsh environments and is often used in high temperature applications.

To ensure fast and efficient service, MFP Seals stocks a wide range of molded and extruded tube stock. Give MFP Seals a call today, we can quickly and precisely machine Lantern Rings for your application.

T1000 (Virgin PTFE)			
Properties	**Unit**	**Method**	**Typical Value**
PHYSICAL - MECHANICAL			
Density	g/cm³	ASTM D792	2.14 - 2.18
Hardness - Shore D	points	ASTM D2240	51 - 60
Tensile strength - CD	MPa	ISO 527	≥ 20
Elongation at break - CD	%	ISO 527	>200
Compressive strength at 1% deformation - CD	psi	ASTM D695	580 - 725
Deformation under load at room temperature after 24 hours at 13.7 N/mm² - CD	%	ASTM D621	14 - 17
Permanent deformation as above after 24 hours of rest at room temperature - CD	%	ASTM D621	7 - 8
Deformation under load at 260°C, after 24 hours at 41 N/mm² - CD	%	ASTM D621	
Permanent deformation as above after 24 hours of rest at room temperature - CD	%	ASTM D621	7 - 8
Impact strength Izod	J/m	ASTM D256	153
Service Temperature (min - max)	°C	/	-200 / +260
Service Temperature (min - max)	°F	/	-328 / +500

CD = Cross Direction; The data we are herewith providing are all based on laboratory testing and are proposed to technical designers as possible and useful advice. Deviations from the values indicated may occur, but they do not constitute themselves either detriment of quality or reason for rejection.

T1075 (25% Glass Filled PTFE)			
Properties	**Unit**	**Method**	**Typical Value**
PHYSICAL - MECHANICAL			
Density	g/cm3	ASTM D792	2.22 - 2.24
Hardness Shore D	Points	ASTM D2240	62 - 67
Tensile Strength	N/mm2	ASTM D4745	≥13
Elongation at Break	%	ASTM D4745	≥180
Service Temperature (min - max)	°C	/	-200 / +260
Service Temperature (min - max)	°F	/	-328 / +500

Other materials are available.

For more information, or to order, contact MFP Seals.

PROMOTIONAL MEDIA

MFPSEALS
www.mfpseals.com

FLOW INDICATORS

Custom Logo Imprinting Available

- All sizes
- PVC (Black or Gray)
- Aluminum
- Stainless Steel
- Steel Set Screw at Top or Bottom
- Precision Measured
- Laser Etched or Roll Embossed
- Wear Resistant Markings
- Custom Designs
- Made In USA

MFP Seals produces a variety of flow indicators, machined from PVC, Aluminum, and Stainless Steel. Manufactured to industry specification, our indicators are precision measured for the most accurate flow adjustments.

Each indicator features etched numbers for long lasting reliability in the field. Aluminum and Stainless Steel indicators are laser etched, while the PVC indicators are roll embossed and painted to produce easy to read white lettering. Both the PVC and Aluminum indicators have steel set screws to secure the gauge to the stem (located at top or bottom).

MFP Seals can manufacture the indicator you need, in the size and quantity you require. Give MFP Seals a call today, we can quickly and precisely machine flow indicators to fit your application.

Looking for something custom? We can produce CNC Machined and Injection Molded Plastic Products to your specifications, in a wide variety of materials.

Corporate Headquarters
900 E. Whitcomb Ave.
Madison Heights, MI 48071
Phone: (248) 585-8170
sales@mfpseals.com

MFPSEALS
MARTIN FLUID POWER

Sealing In Success™

www.mfpseals.com

Oil & Gas Division
6130 Westview
Houston, TX 77055
Phone: (713) 939-9990
sales@mfpseals.com

MFPSEALS®
www.mfpseals.com

FLOWLINE

AMERICAN MADE · MFP SEALS® · Since 1977 · AMERICAN OWNED

HAMMER UNION SEALS

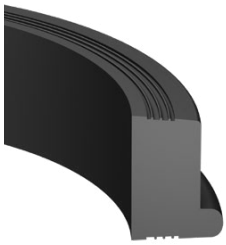

NBR 80, HNBR 80, FKM 80 & 90

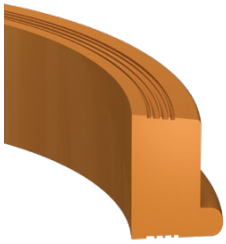

H2155 - HYTREL® TPE

T1000 Virgin PTFE

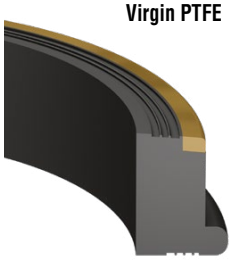

NBR 85 / FKM 90, BRASS BACKUP

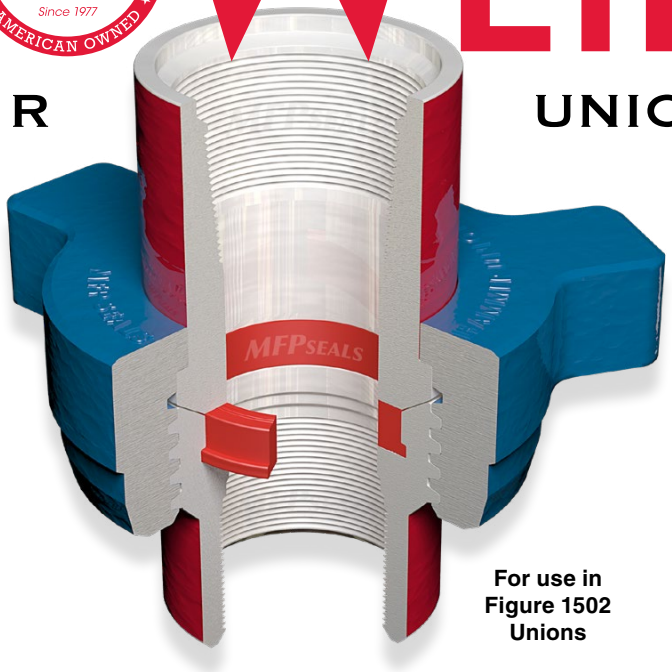

For use in Figure 1502 Unions

MFP Seals manufactures a full line of Hammer Union Seals (HUS), for use on flow lines. Our Hammer Union Seals are designed to seal Figure 1502 unions with typical pressure ratings for standard service of 15,000 PSI, and are tested to 22,500 PSI.

Our standard Hammer Union Seals are made from a variety of Elastomers. For Sour Gas Service we offer proprietary HNBR, U4150 and U4160 compounds. For specialty applications, we now offer our premium Urethane compounds, PTFE and more!

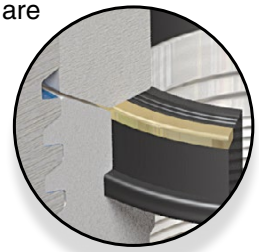

MFP Seals also manufactures Hammer Union Seals with either Brass or Stainless Steel backup rings, molded in, to prevent seal extrusion under high pressure or during pressure spikes. Whatever your application requires, MFP Seals has the perfect solution.

*U2151 Ultraflex® TPU

*U4150 & U4160 Ultraflex® - TPU

*U2150 Ultraflex® TPU

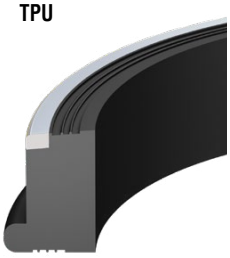

NBR 85 / FKM 90, STAINLESS STEEL BU

NOW AVAILABLE IN OUR PREMIUM URETHANE COMPOUNDS*

Metric Conversion Tables

Fractions, Decimals and Millimeters

FRACTIONS	DECIMALS	MILLIMETERS
1/64	0.015625	- 0.397
1/32	.03125	- 0.794
3/64	.046875	- 1.191
1/16	.0625	- 1.588
5/64	.078125	- 1.984
3/32	.09375	- 2.381
7/64	.109375	- 2.778
1/8	.1250	- 3.175
9/64	.140625	- 3.572
5/32	.15625	- 3.969
11/64	.171875	- 4.366
3/16	.1875	- 4.763
13/64	.203125	- 5.159
7/32	.21875	- 5.556
15/64	.234375	- 5.953
1/4	.2500	- 6.350
17/64	.265625	- 6.747
9/32	.28125	- 7.144
19/64	.296875	- 7.541
5/16	.3125	- 7.938
21/64	.328125	- 8.334
11/32	.34375	- 8.731
23/64	.359375	- 9.128
3/8	.3750	- 9.525
25/64	.390625	- 9.922
13/32	.40625	-10.319
27/64	.421875	-10.716
7/16	.4375	-11.113
29/64	.453125	-11.509
15/32	.46875	-11.906
31/64	.484375	-12.303
1/2	.5000	-12.700

FRACTIONS	DECIMALS	MILLIMETERS
33/64	0.515625	-13.097
17/32	.53125	-13.494
35/64	.546875	-13.891
9/16	.5625	-14.288
37/64	.578125	-14.684
19/32	.59375	-15.081
39/64	.609375	-15.478
5/8	.6250	-15.875
41/64	.640625	-16.272
21/32	.65625	-16.669
43/64	.671875	-17.066
11/16	.6875	-17.463
45/64	.703125	-17.859
23/32	.71875	-18.256
47/64	.734375	-18.653
3/4	.7500	-19.050
49/64	.765625	-19.447
25/32	.78125	-19.844
51/64	.796875	-20.241
13/16	.8125	-20.638
53/64	.828125	-21.034
27/32	.84375	-21.431
55/64	.859375	-21.828
7/8	.8750	-22.225
57/64	.890625	-22.622
29/32	.90625	-23.019
59/64	.921875	-23.416
15/16	.9375	-23.813
61/64	.953125	-24.209
31/32	.96875	-24.606
63/64	.984375	-25.003
1	1.000	-25.400

MM	INCHES	MM	INCHES
.1-	.0039	47-	1.8504
.2-	.0079	48-	1.8898
.3-	.0118	49-	1.9291
.4-	.0157	50-	1.9685
.5-	.0197	51-	2.0079
.6-	.0236	52-	2.0472
.7-	.0276	53-	2.0866
.8-	.0315	54-	2.1260
.9-	.0354	55-	2.1654
1-	.0394	56-	2.2047
2-	.0787	57-	2.2441
3-	.1181	58-	2.2835
4-	.1575	59-	2.3228
5-	.1969	60-	2.3622
6-	.2362	61-	2.4016
7-	.2756	62-	2.4409
8-	.3150	63-	2.4803
9-	.3543	64-	2.5197
10-	.3937	65-	2.5591
11-	.4331	66-	2.5984
12-	.4724	67-	2.6378
13-	.5118	68-	2.6772
14-	.5512	69-	2.7165
15-	.5906	70-	2.7559
16-	.6299	71-	2.7953
17-	.6693	72-	2.8346
18-	.7087	73-	2.8740
19-	.7480	74-	2.9134
20-	.7874	75-	2.9528
21-	.8268	76-	2.9921
22-	.8661	77-	3.0315
23-	.9055	78-	3.0709
24-	.9449	79-	3.1102
25-	.9843	80-	3.1496
26-	1.0236	81-	3.1890
27-	1.0630	82-	3.2283
28-	1.1024	83-	3.2677
29-	1.1417	84-	3.3071
30-	1.1811	85-	3.3465
31-	1.2205	86-	3.3858
32-	1.2598	87-	3.4252
33-	1.2992	88-	3.4646
34-	1.3386	89-	3.5039
35-	1.3780	90-	3.5433
36-	1.4173	91-	3.5827
37-	1.4567	92-	3.6220
38-	1.4961	93-	3.6614
39-	1.5354	94-	3.7008
40-	1.5748	95-	3.7402
41-	1.6142	96-	3.7795
42-	1.6535	97-	3.8189
43-	1.6929	98-	3.8583
44-	1.7323	99-	3.8976
45-	1.7717	100-	3.9370
46-	1.8110		

1 mm = .03937”

.001” = .0254 mm

www.mfpseals.com

sales@mfpseals.com

Manufacturing

Corporate Headquarters, MFP Seals Manufacturing, Research & Development
900 E. Whitcomb Ave., Madison Heights, MI 48071, Phone: (248) 585-8170, Fax: (248) 589-3499

IPM-TEK - The American PTFE Manufacturer
2352 N. Lobdell Avenue
Baton Rouge, LA 70806
www.ipmtek.com

Gadjets - Hydrowype Metallic Scrapers
323 Industrial Dr.
Franklin, OH 45005
www.gadjets.com

Spartan Gasket
600 Minnesota,
Troy, MI 48083

U.S. Distribution Centers

Troy, MI
600 Minnesota
Troy, MI 48083
Phone: (248) 585-8170
Fax: (248) 585-4398
- Shipping & Receiving
- Custom Kitting
- Custom Labeling

St. Joseph, MI
315 Palladium Drive
St. Joseph, MI 49085
Phone: (269) 429-0824
Fax: (269) 429-0829

Houston, TX
6130 Westview
Houston, TX 77055
Phone: (713) 939-9990
Fax: (713) 939-9797

Phoenix, AZ
3767 E. Broadway Rd.
Suite 10
Phoenix, AZ 85040
Phone: (602) 437-3220
Fax: (602) 437-3424

Tampa, FL
5159 Rio Vista Ave. W.
Tampa, FL 33634
Phone: (813) 884-6777
Fax: (813) 884-6999

International Distribution Centers

Lincoln, England
9, Evans Business Center,
Gateway Park, Newark Rd.,
Lincoln, UK LN6 9UH
mfp.uk@mfpseals.com

Taipei, Taiwan
4F, No. 607, Rueiguang Road,
Neihu Dist., Taipei 11942,
Taiwan, R.O.C.
mfp.tw@mfpseals.com

Troy, MI
International Sales
600 Minnesota
Troy, MI 48083
Phone: (248) 585-8171
Fax: (248) 585-4398

Authorized Distributor

Copyright © Martin Fluid Power Company, Inc., MFP Seals is a registered trademark of Martin Fluid Power Company, Inc.

ENGINEERING GUIDE - VOL. 4

Document No.
MFPSEALS_EGV4_OCT23A