PWS - Tight Tolerance Composite Wear Strip - C4000

A product of MFP Seals.

PWS - C4000 TIGHT TOLERANCE COMPOSITE WEAR STRIP

MFP Seals' proprietary Tight Tolerance C4000 Composite Wear Strip is designed to eliminate scoring in hydraulic and pneumatic applications by preventing metal to metal contact. Sold by the roll.

See page 6 for guide ring cutting instructions.

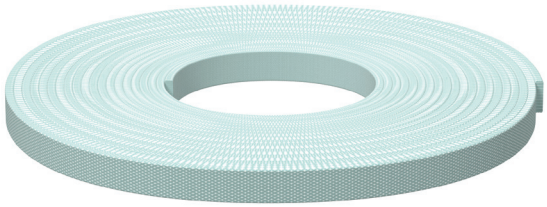

MFP PART NUMBER

PWS125x0250C4000-RL

SEAL TYPE | C/S | L2 | COMPOUND | ROLL

PROFILE

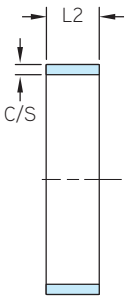

ROD APPLICATION

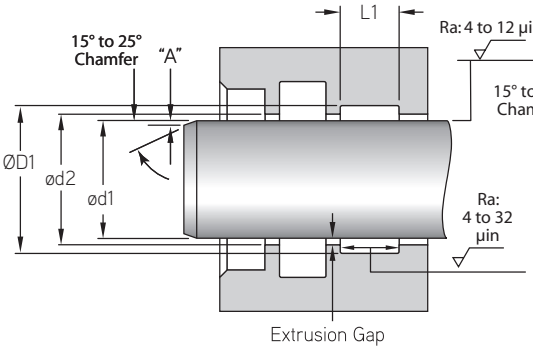

PISTON APPLICATION

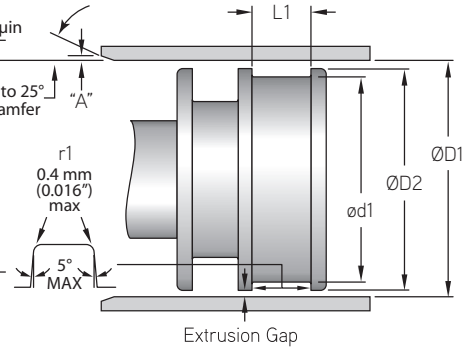

MFP PART NUMBER	ROD OR PISTON APPLICATION C/S	L2	L1	ROLL LENGTH
TOLERANCE	+.000/-.002	+.000/-.010	+.010/-.000	
PWS125X0250C4000-RL	0.125	0.250	0.260	32 FT
PWS125X0375C4000-RL	0.125	0.375	0.385	32 FT
PWS125X0500C4000-RL	0.125	0.500	0.510	32 FT
PWS125X0625C4000-RL	0.125	0.625	0.635	32 FT
PWS125X0750C4000-RL	0.125	0.750	0.760	32 FT
PWS125X1000C4000-RL	0.125	1.000	1.010	32 FT
PWS125X1250C4000-RL	0.125	1.250	1.260	32 FT
PWS125X1500C4000-RL	0.125	1.500	1.510	32 FT
PWS125X1750C4000-RL	0.125	1.750	1.760	32 FT
PWS125X2000C4000-RL	0.125	2.000	2.010	32 FT

Surface Finish: ISO 4287 & Chamfer Information on pages 7-9.
For ISO tolerance charts, refer to pages 12-13.

Compound information available on pages 20-37.